# TEXT BOOK OF TURNING

*By*

P. F. HERCUS

*General Manager*

F. W. HERCUS PTY. LIMITED

**Second Edition 1970**

*Published by*

F. W. HERCUS PTY. LIMITED

Thebarton, South Australia

*Printed by*

HARMAN & JACKA PTY. LTD., 6-28 CHARLES STREET, UNLEY, S.A.

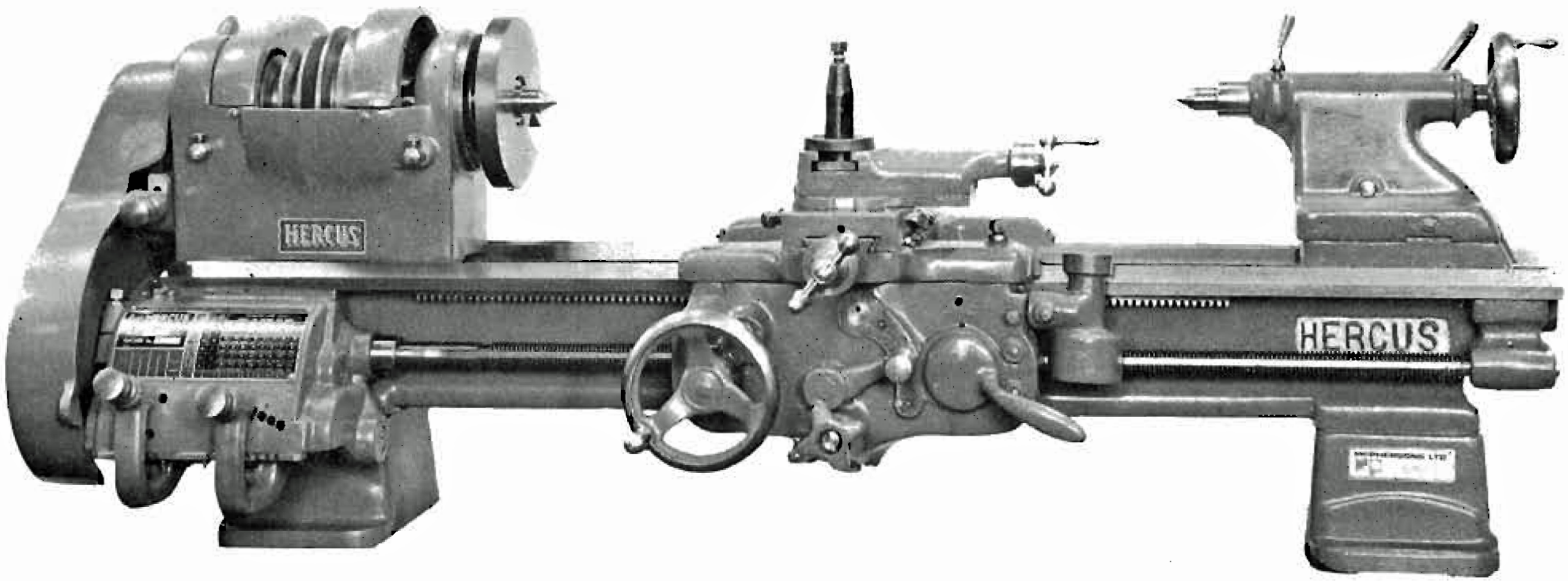
HERCUS
HERCUS

# CONTENTS


| CHAPTER | | PAGE |
|---|---|---|
| 1 | Installation, Construction and Maintenance of the Lathe | 5 |
| 2 | Cutting Tools and their uses | 13 |
| 3 | Measurements | 23 |
| 4 | Turning Between Centres | 28 |
| 5 | Chuck and Faceplate Work | 33 |
| 6 | Drilling and Reaming | 39 |
| 7 | Taper Turning and Boring | 44 |
| 8 | Screw Threads and Screwcutting | 49 |
| 9 | Miscellaneous Lathe Operations and Attachments | 63 |
| 10 | Useful Information | 76 |
| 11 | Practical Examples | 89 |
| | Tables | 99 |
| | Index | 106 |

# *Foreword*

## MEN AND MACHINES

Few people outside the engineering profession fully appreciate the functions which machine tools perform; still less the decisive influence which they exert upon our life and economic existence. Yet every day and at every turn we are confronted by evidence of this influence. During the last 100 years machine tools have radically transformed the whole outward aspect of modern society. They have brought the costly products of yesterday within reach of all and helped to develop new materials, products and techniques, raising living standards beyond the wildest daydreams of a century ago. The imagination of a new generation of engineers and scientists has been fired by projects ranging from the exploitation of atomic energy, to the long cherished dream of man to venture beyond the skies.

Whether as machinery for industrial production, or as the means of producing every other kind of manufacturing machinery, the machine tool ranks as one of the most decisive factors in modern times. The prodigious part played by machine tools in industrial development in the past, and the boundless potential which they hold for the future, emphasise the value of a thorough understanding of this subject to all those seeking an outlet for their creative instincts in modern industry.

Of the vast range of machine tools devised by the creative genius of earlier generations of engineers, none has surpassed the lathe in usefulness or versatility, and in none are the fundamental mechanisms of machine tool operation and basic principles of metal cutting more clearly and simply illustrated. Thus the lathe, oldest and most useful of machine tools and the basis from which all others have developed, continues to serve mankind, not only as a means of production, but as the starting point in practical training for engineers of the future.

CHAPTER ONE

# INSTALLATION, CONSTRUCTION AND MAINTENANCE OF THE LATHE

Built to close limits of accuracy, and subjected to meticulous inspection at every stage of manufacture, the modern screwcutting lathe is a precision machine tool and should be set up and handled in a manner which will enable it to give a performance worthy of the care with which it has been constructed.

In setting up a lathe in the position in which it is to work, the critical factor lies in providing a stable support, free from any strain or pressure which could cause distortion of the bed, resulting in the V-ways which guide the saddle being thrown out of alignment with the axis of centres and making the production of accurate work impossible.

Where the lathe is to stand on a bench it is advisable to pack the feet to support the machine in three places as shown in Fig. 1. The bolts at the headstock end may then be tightened down firmly to assist in taking the weight of the unit drive while those at the tailstock end are left finger tight only. Under these conditions the lathe will be subjected to no strain from the holding down bolts and will remain unaffected by any small amount of movement which may subsequently take place in the bench top.

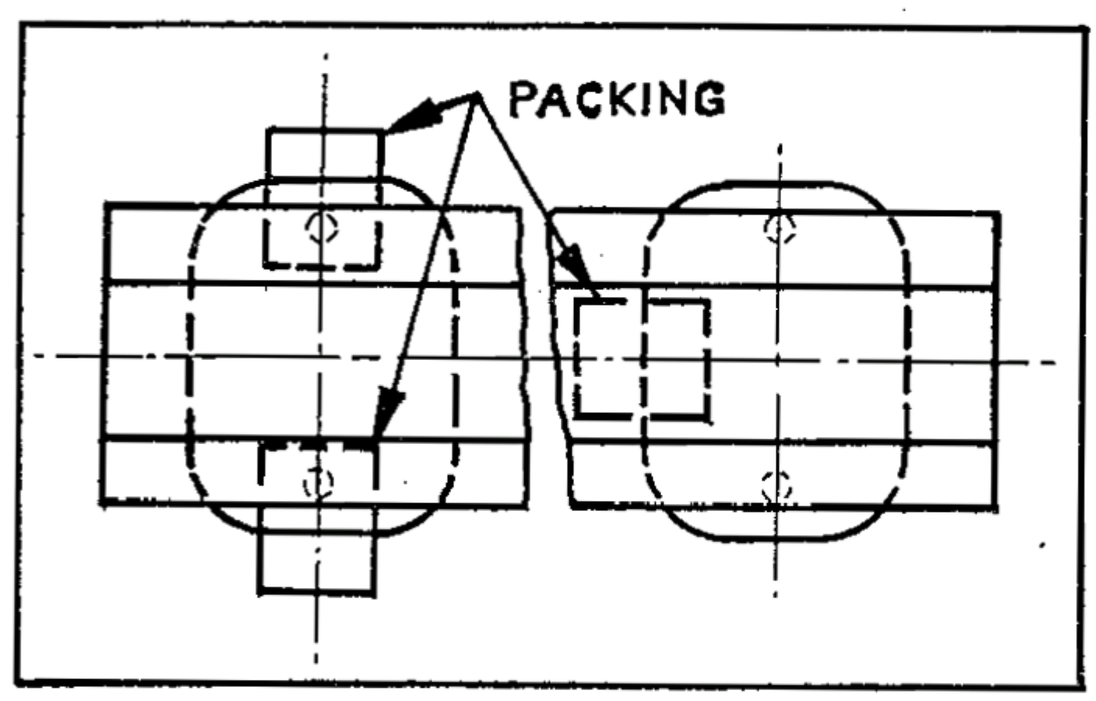


**Fig. 1 Three point Support for Bench Lathe**

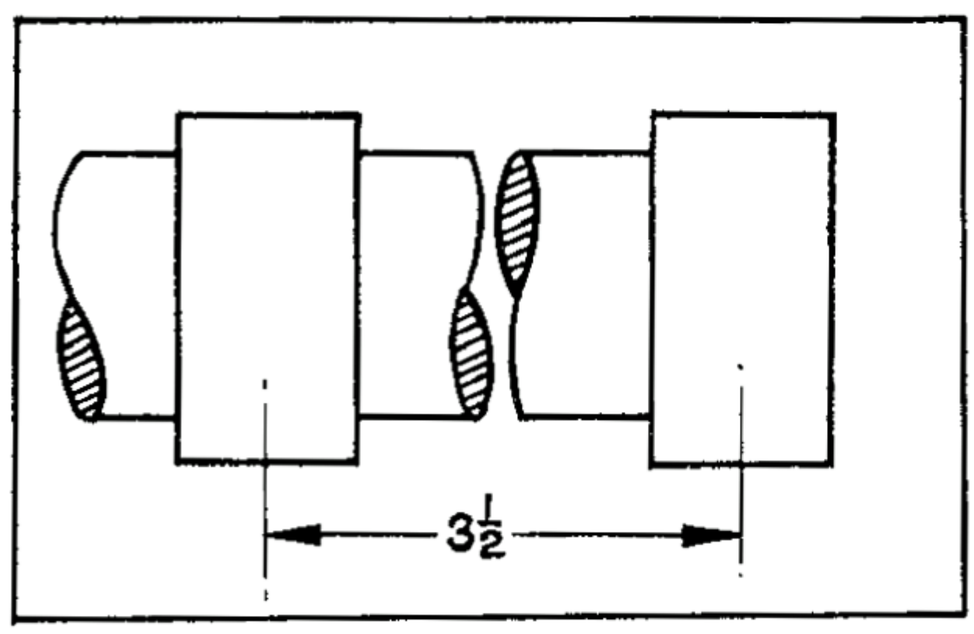


**Fig. 2 Test Piece for Checking Lathe Mounting**

A lathe which is to be mounted on legs or cabinet base must have its weight correctly distributed over all four legs or both cabinet pedestals if distortion of the bed is to be avoided. This may be checked and corrected as follows: A piece of soft steel about one inch in diameter is gripped in the chuck with approximately five inches protruding in front of the jaws and turned to give two collars as shown in Fig. 2. A light cut is then taken over both collars without disturbing the setting of the cutting tool, followed by a second cut at the same tool setting, after which each collar is measured with a micrometer.

If the outer collar is the larger it indicates that the tailstock end of the lathe is too low in front and packing is required under the front tailstock end leg or the front of the tailstock pedestal. If the outer collar is the smaller, the tailstock end is too high in front and packing must be placed under the rear tailstock end leg or the back of the tailstock pedestal.

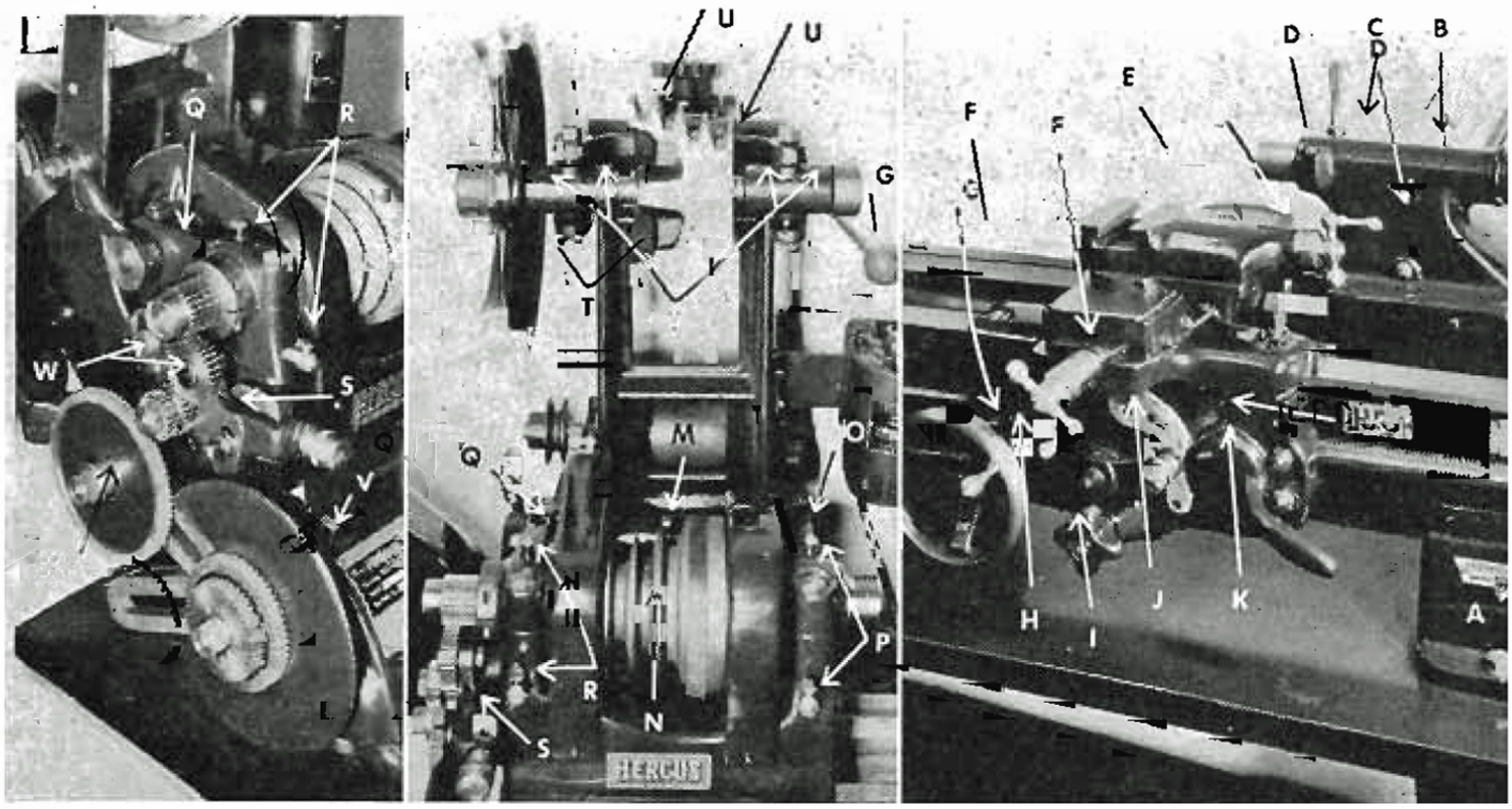


**Fig. 3 Oiling points of the Lathe**

| | | | |
|---|---|---|---|
| A | Rear Leadscrew Bearing | M | Back Gear |
| B | Tailstock Handwheel Bearing | N | Cone Pulley |
| C | Tailstock Screw | O | Front Back Gear Spindle Bearing |
| D | Tailstock Clamp (at back) | P | Front Main Spindle Bearing |
| E | Compound Rest Screw Bearing | Q | Rear Back Gear Spindle Bearing |
| F | Cross Feed Screw Bearing | R | Rear Main Spindle Bearing |
| G | Apron Handwheel Bearing | S | Reverse Shaft Bearing |
| H | Rack Pinion Bearing | T | Countershaft Bearings |
| I | Worm Drive | U | Countershaft Pivot Bearing |
| J | Cross Feed Pinion Bearing | V | Gearbox |
| K | Half Nut Cam | W | Twin Reverse Gears |
| L | Half Nuts | X | Idler Gear Bearing |

## Table 1 Lubricants

| Supplier | Recommended Oil |
|---|---|
| MOBIL OIL AUST. | Mobil Vactra Oil Heavy |
| CALTEX OIL (AUST.) PTY. LTD. | Regal Oil P.C. (R. & O.) |
| SHELL CO. OF AUST. | Vitrea Oil 33 |
| AMPOL PETROLEUM LTD. | Gernol Oil 37 |
| CASTROL LTD. | Perfecto R.R. |
| H. C. SLEIGH LTD. | Purol Heavy Medium |
| B.P. AUST. LTD. | B.P. Energol H.P. 30 |
| NEPTUNE OIL CO. | P. 13 |

The lathe will be correctly positioned when the diameter of the outer collar is smaller than that of the inner collar by an amount equal to the error measured in the horizontal plane on the headstock test bar. This error is shown in the inspection record sheet which accompanies the machine.
Should the floor under the lathe be light or likely to shift it is advisable to bolt down only the headstock end of the machine, leaving the tailstock end leg or pedestal packed as described above but not fixed to the floor.

## Oiling the Lathe

It is advisable to oil every bearing in a new lathe before it is run under power, after which the machine should, when in regular use, be oiled daily with a good quality machine oil. Grease or automobile engine oil are not suitable lubricants for lathe work and should not be used.
All oiling points on the "Hercus" Model "A" lathe are illustrated in Fig. 3. A few drops in each hole is sufficient, as excess oil will only run out of the bearings. Such excess should be wiped off to prevent the collection of dust or grit around working parts.
A list of recommended lubricants is given in Table 1.

## The Lathe Bed

The bed is the foundation of the lathe and hence must be of sound design and substantial construction to ensure adequate rigidity. The "ways" which guide the carriage and tailstock must be finely finished and accurate in their alignment to the line of lathe centres and to each other. Machining of the bed must, moreover, be carried out in a carefully ordered sequence of operations, separated by adequate periods for "seasoning", or "ageing", of the cast iron to allow internal stresses in the metal to become fully stabilised before final finishing operations are performed. This ensures that the accuracy of the ways will not be lost through subsequent warping or twisting of the bed.
With normal use and reasonable care no appreciable wear will occur on a lathe bed, even over a period of years. The bed should be kept clean and lightly oiled, chips or dirt should not be allowed to accumulate on it and tools or other objects should not be dropped on the ways.

## The Headstock

The lathe headstock may be fitted with either plain bearings, Fig. 4, or roller bearings, Fig. 5, on the main spindle. In either instance operation of the headstock is the same and, with the exception of headstock body, spindle and gear guards, all parts are identical.
Fig. 6 shows operating controls and principal components of the lathe headstock. Spindle speeds are changed by shifting the belt from one step of the cone pulleys to another and by engaging or disengaging the back gears.
The headstock is arranged for direct belt drive by pushing the back gear lever "B", back, to its fullest extent and pushing the bull gear lock pin "A" inwards while revolving the cone pulley slowly by hand until the pin slides into position. In this condition the cone pulley, otherwise free on the spindle, is connected by the lock-pin to the bull gear which is keyed to the spindle and hence power is transmitted directly from the cone pulley to the spindle. For slow speeds the

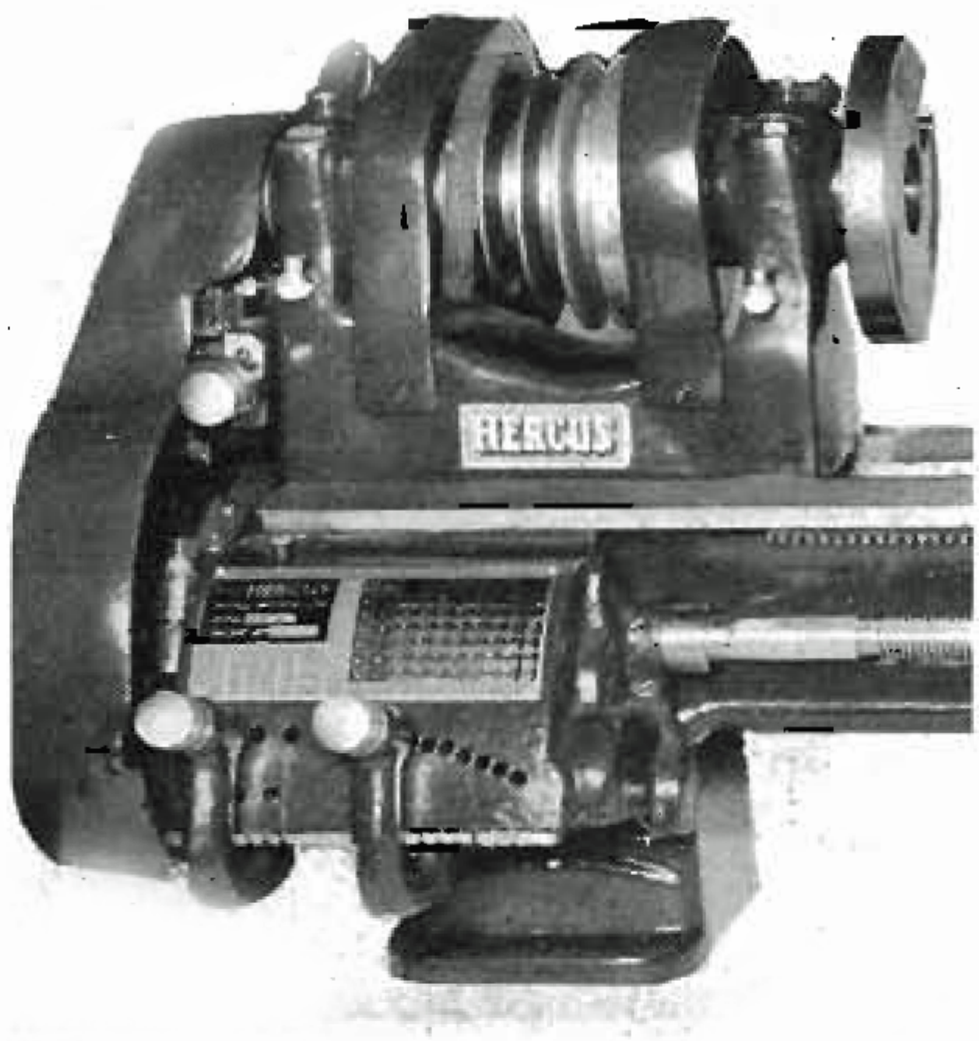


**Fig. 4 Plain Bearing Headstock**

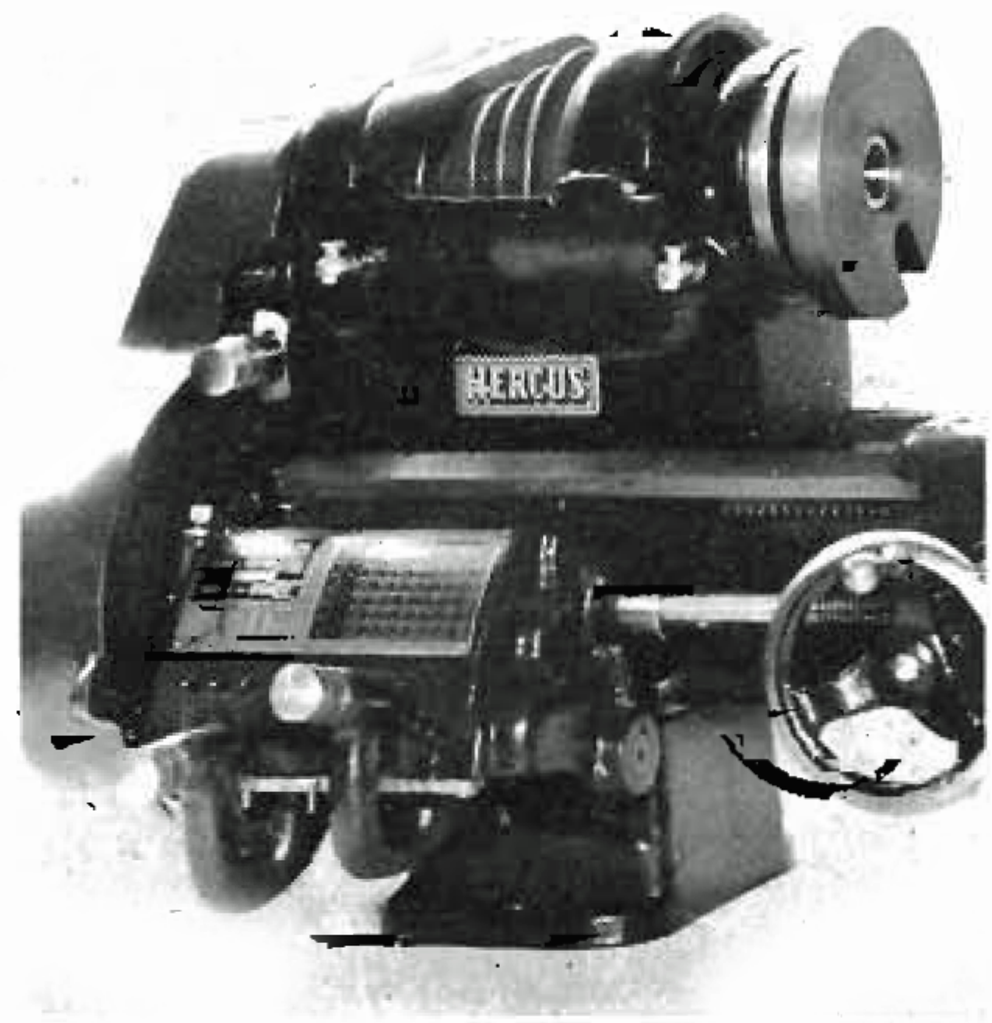


**Fig. 5 Roller Bearing Headstock**

bull gear lock-pin is withdrawn, thus disconnecting the pulley and bull gear while the back gear lever "B" is moved forward to its fullest extent. In this condition power is transmitted from the cone pulley via the back gears to the spindle and a reduced speed range is obtained. A table of speeds available for lathes with either 3 or 4 step cone pulleys and single or two speed countershafts is set out in Table 2.

## Table 2 Speeds available with H and P type Drive Units

| | |
|---|---|
| Single-speed motor drive and 3-step flat belt: | 750 - 410 - 240 - 160 - 90 - 50 |
| Two-speed motor drive and 3-step flat belt: | |
| Fast Motor Speed | 1120 - 620 - 360 - 245 - 135 - 80 |
| Slow Motor Speed | 580 - 320 - 185 - 120 - 70 - 40 |
| Single-speed motor drive and 4-step Vee belt drive: | |
| | 700 - 515 - 370 - 280 - 176 - 112 - 81 - 60 |
| Two-speed motor drive and 4-step Vee belt drive: | |
| Fast Motor Speed | 1050 - 770 - 550 - 420 - 230 - 170 - 120 - 92 |
| Slow Motor Speed | 540 - 395 - 280 - 215 - 118 - 86 - 61 - 47 |
| **High Speed Drives** | |
| Single-speed motor drive and 4-step belt drive: | |
| | 2600 - 1850 - 1355 - 975 - 485 - 345 - 250 - 180 |
| Two-speed motor drive and 4-step belt drive: | |
| Fast Motor Speed | 2600 - 1850 - 1355 - 975 - 485 - 345 - 250 - 180 |
| Slow Motor Speed | 1095 - 780 - 570 - 410 - 205 - 145 - 105 - 76 |

The reverse bracket lever "C", Fig. 6, has three positions. The centre position is neutral and in this position all power feeds are disconnected. When in either the top or bottom positions, power feeds are in operation, their direction depending on the arrangement of the change gears. When only one idler or compound idler gear is in use the top position engages the forward (i.e., right to left) feeds and the bottom position the reverse (i.e., left to right) feeds; if two idlers are in use the positions are reversed.

## Adjustment of Headstock Bearings (Plain)

The headstock spindle is hardened on all wearing surfaces, and if kept well oiled the bearings should give many years of trouble-free service. Should adjustment eventually become necessary, the bearing cap screws should be removed and the shims taken out from both bearings. Each of these consists of one solid steel shim and one of laminated brass. Peeling off one of these laminations will allow closer adjustment of the bearings by tightening of the cap screws. End play is adjusted by means of a take-up nut at the end of the spindle, a lock screw being provided to clamp the nut after adjustment has been made.

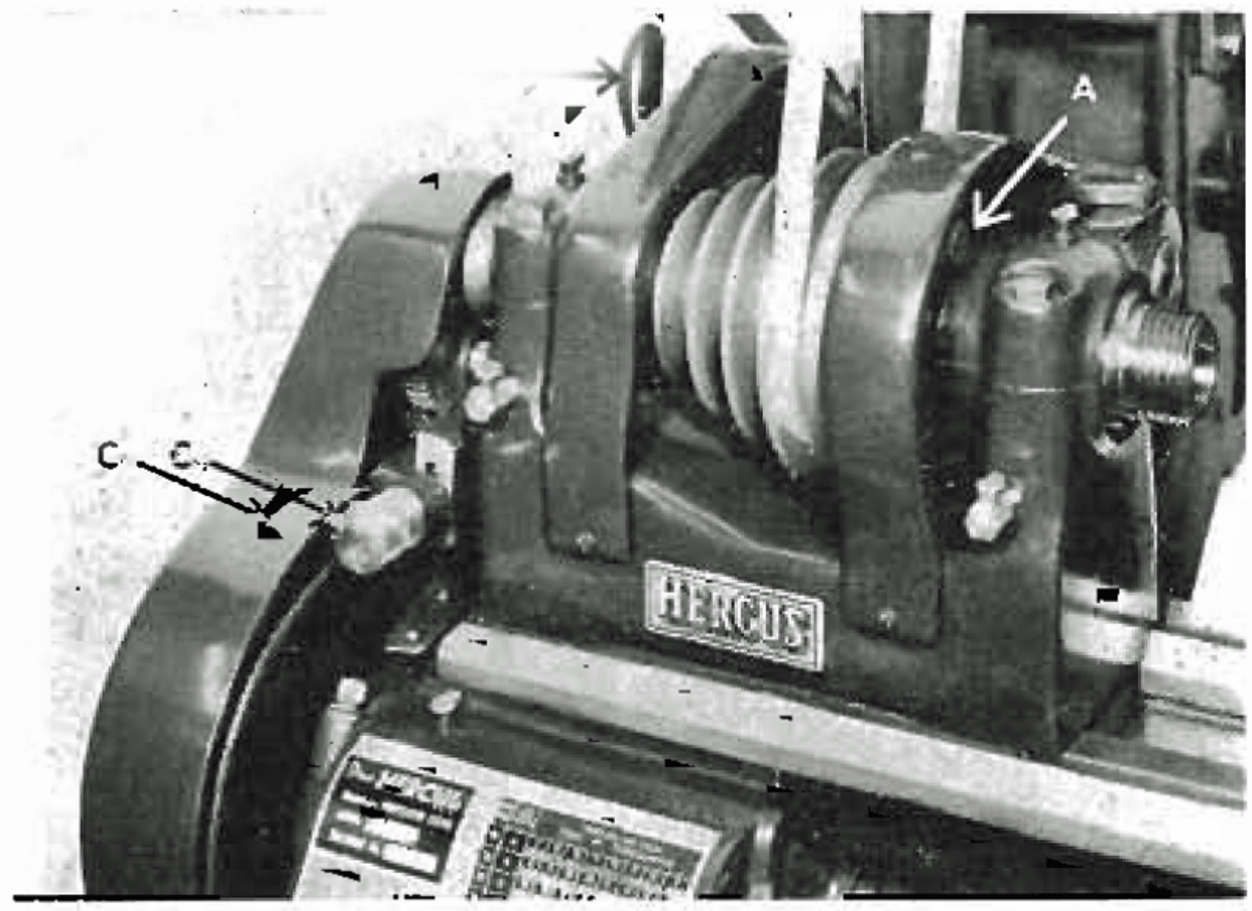


**Fig. 6 Principal Parts of Lathe Headstock**

## Removing the Spindle (Plain Bearings)

Should it at any time be required to remove the spindle from the headstock it is first necessary to unscrew the reverse bracket locking screw and remove the reverse bracket. The bearing cap screws are then removed, the shims taken out from both bearings, the spindle take-up nut unscrewed and guards removed from over the back gears. The spindle itself may then be removed by tapping it forward with a piece of wood or a rawhide hammer.

When replacing the spindle the two headstock bearing oiler elbows on the front of the headstock should be unscrewed, the spring-loaded oiling felts in the bottom of each bearing depressed and a piece of stout wire inserted into each oiler hole to hold the felts down whilst the spindle is being inserted. A strip of felt is located along the front of each bearing, between the shims and the spindle. These felts are likely to be dislodged when the spindle is removed, in which case they are most conveniently replaced after the spindle has been returned but before the shims are re-inserted. Care must also be taken to see that the bull gear key does not become displaced as it enters the keyway in the gear.

## Adjustment of Headstock Bearings (Roller)

Adjustment of the roller bearing headstock is carried out by tightening the takeup nut at the end of the spindle. This automatically takes care of both axial and radial adjustment. End play of the spindle cone pulley is limited by a spacing collar between the rear bearing cone and the end of the pulley. The pulley should have .003" to .007" end float. If adjustment of the main bearings reduces or eliminates this the spacing collar must be removed and reduced in length to give the required clearance.

For best results the spindle bearings should be pre-loaded to 1½-2 inch lbs. This is best measured by a spring balance attached to a cord wound around a 2" dia. bar held in the chuck and represents the torque required to keep the spindle moving after it has been started from rest by hand.

## Removing the Spindle (Roller Bearings)

To remove the spindle from a roller bearing headstock the reverse bracket and gear guards are first removed, front and rear bearing caps taken off, take-up nut unscrewed and the spindle tapped forward as for a plain bearing machine.
The bearing "cups", or outer members, may be removed by tapping lightly and evenly on a pair of steel rods inserted in the two extraction holes provided in the headstock body immediately behind the bearing seatings.

## The Lathe Carriage

The principal parts of the lathe carriage are illustrated in Fig. 7. Adjustable gib strips are provided to take up wear in the cross slide and compound rest, and an adjustable keep plate is provided at the rear of the saddle.
The cross slide and compound rest screws are fitted with graduated collars reading in thousandths of an inch, the graduated collars are adjustable and may be set at zero by releasing the lock screws which keep them in position.

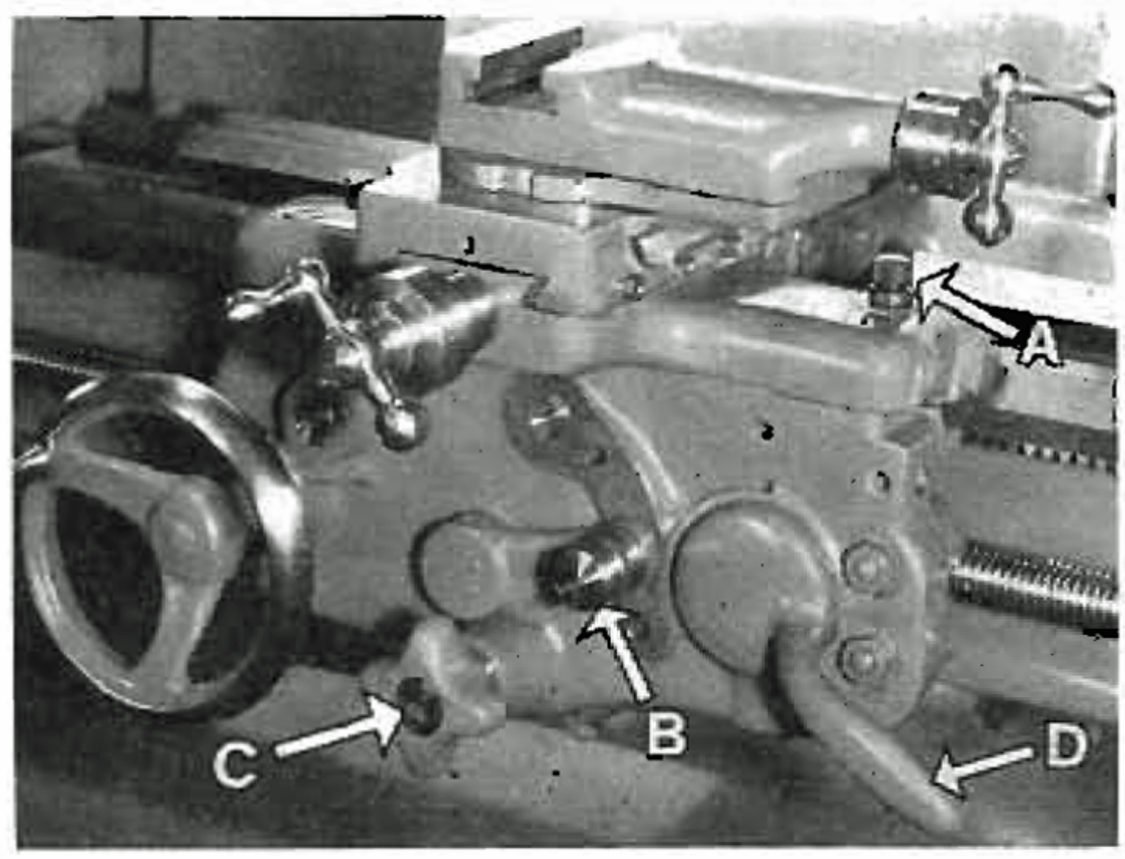


**Fig. 7 Principal Parts of Lathe Carriage (Models A and B Lathe)**

The compound rest swivels to any angle and the base is graduated through 360°, locking screws are provided to clamp it in position.
The carriage lock screw "A" locks the saddle firmly to the bed for facing and cutting off operations. This screw should always be released before engaging the screw-cutting or power longitudinal feed mechanism. The lever "B" engages the longitudinal or "sliding" feed when in the upper position and the cross or "surfacing" feed when in the lower position, the central position being neutral. The power feeds are driven through a worm drive and friction clutch which is engaged by turning the knob "C" in a clock-wise direction and disengaged by turning in an anti-clock-wise direction.

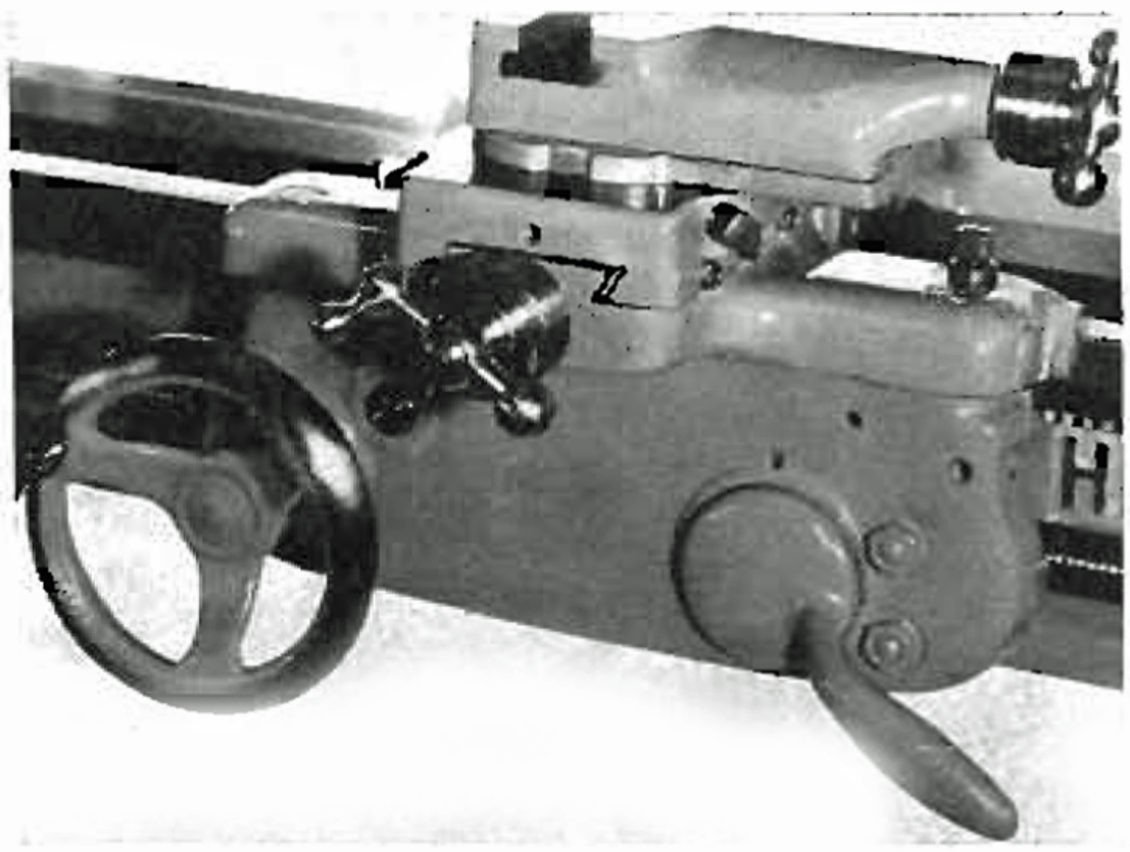

**Fig. 8 Plain Apron, Model C Lathe**

An automatic safety device ensures that the half nut lever "D" can only operate when the feed engaging lever "B" is in the neutral position.
Model "C" Lathes are fitted with a plain apron as per Fig. 8. The cross feed is hand operated and sliding feeds are obtained by engaging the half-nuts with the leadscrew. The range of power feeds available on all three models, together with details of required change gear arrangements, are given on the index chart attached to the lathe. See also page 54, chapter 8.

## The Tailstock

The tailstock, Fig. 9, is of the self-ejecting type and is locked on the bed by an eccentric lock and lever. The tailstock top may be set over for taper turning by means of the set-over screws after first loosening the eccentric clamp.

The position of the eccentric locking lever may be adjusted if necessary by removing the tailstock from the bed and screwing the clamping bolt up by one quarter of a turn.

The tailstock of every lathe is individually corrected, by hand scraping of its under surface, to bring it into correct alignment with the headstock, and hence the tailstock of one lathe will not exactly match the headstock of another. For this reason each tailstock bears the lathe serial number and care should always be taken not to allow tailstocks to be mounted on the wrong lathe when two or more are in use in the same workshop.

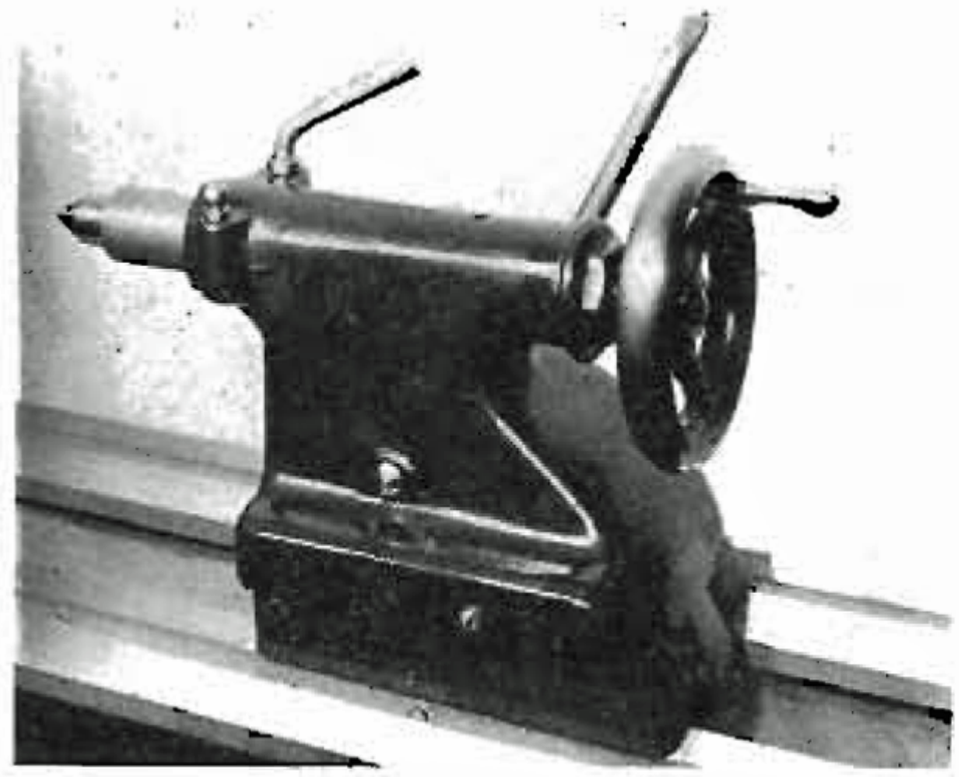

**Fig. 9 The Tailstock**

## The Drive Unit

The lathe may be fitted with either a vertical "H" type drive unit, Fig. 10, or a horizontal "P" type drive unit, Fig. 10a. Both units bolt directly to the back of the bed, have provision for independent adjustment of each belt, and a quick-action eccentric device to slacken the drive belt for ease in speed changing. The countershaft may be mounted in either plain or ball bearings, and have either

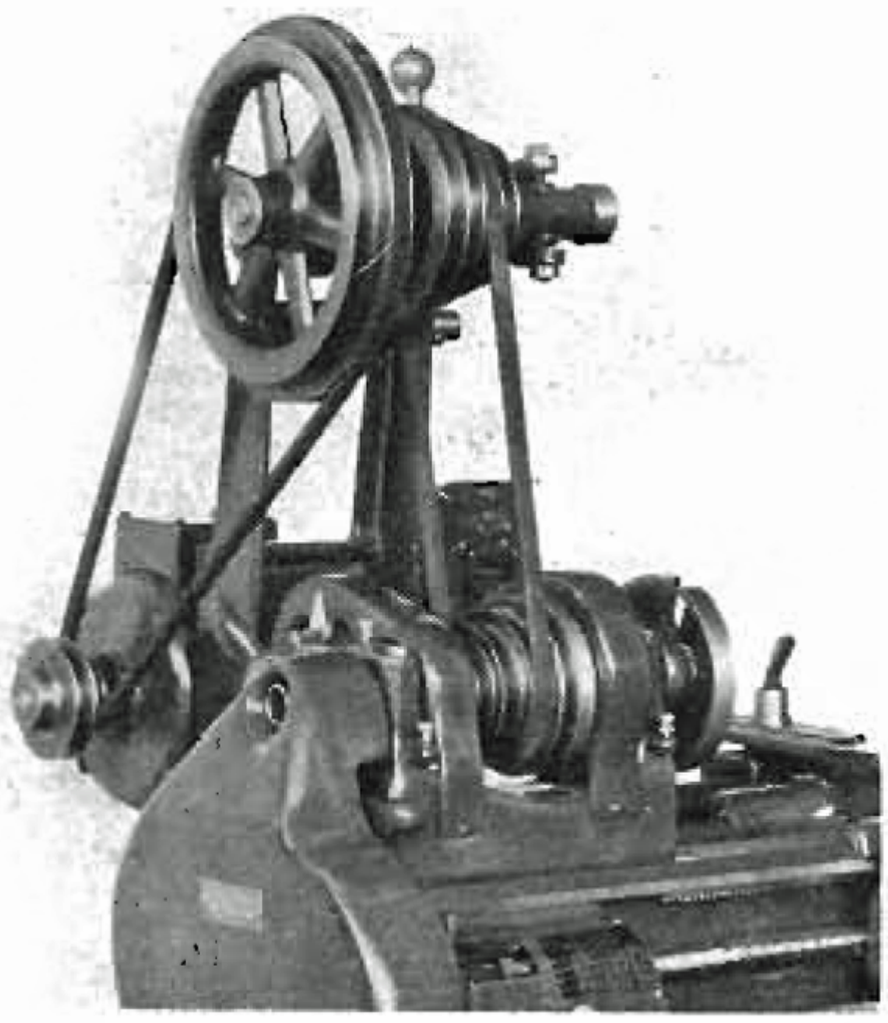

**Fig. 10 "H" Pattern Drive Unit**

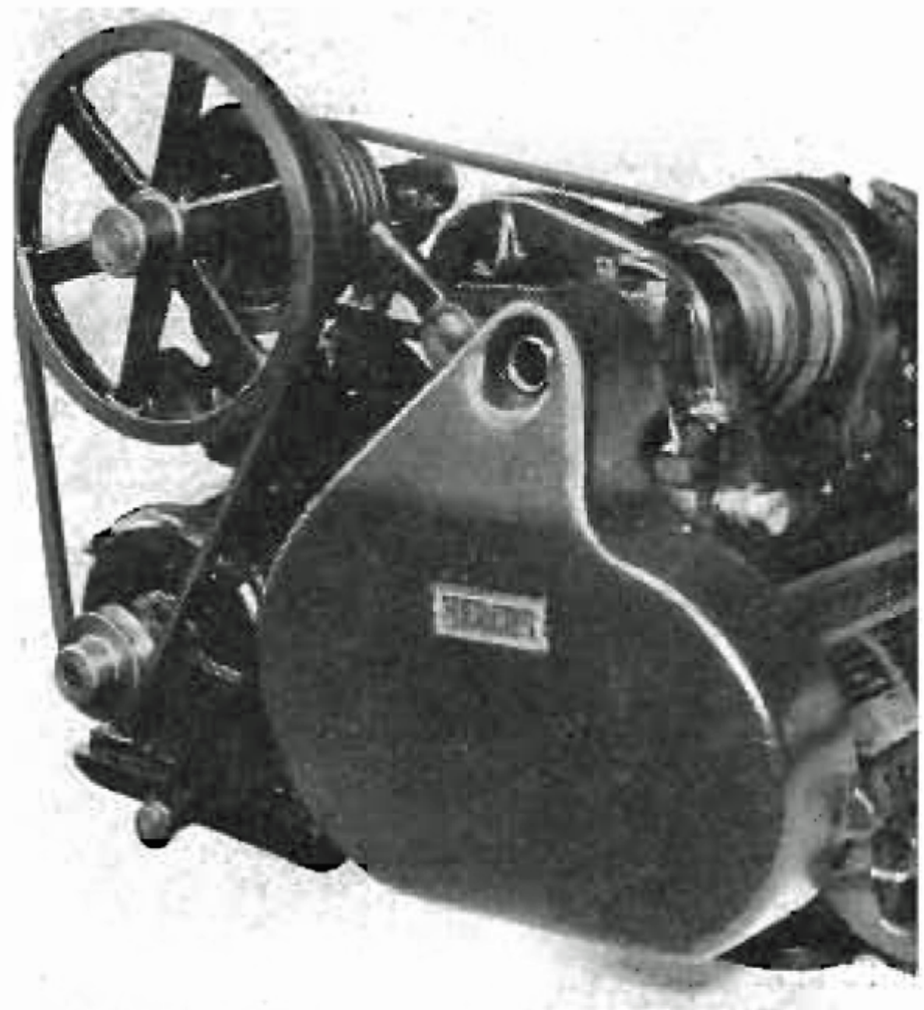

**Fig. 10a "P" Pattern Drive Unit**

single or two speed drive from the motor. The high speed drive shown in Table 2, page 8, is obtained by fitting special high speed pulleys to motor, countershaft and lathe spindle, and is advisable only on machines with roller bearing headstocks and ball-bearing countershafts.

When working at high speeds, particular attention should be paid to lubrication, and fast-moving parts oiled two or three times daily.

## Craftsman Lathes

The Craftsman range of lathes, Fig. 11 are built integral with a steel cabinet base as a self contained unit. The headstock is enclosed, back-geared and has a roller bearing spindle driven from underneath.

The drive unit Fig. 11a is located in the left hand compartment. Power is transmitted from the motor to a countershaft, thence through 5 step pulleys to a lay shaft and from there through wedgelink belt to the headstock. Provision is made for independent adjustment of each belt and a quick action eccentric device is incorporated to slacken the drive belt for ease in speed changing.

The Craftsman Lathe is driven by a ¾ HP motor and has a range of 10 speeds from 58-1840 RPM.

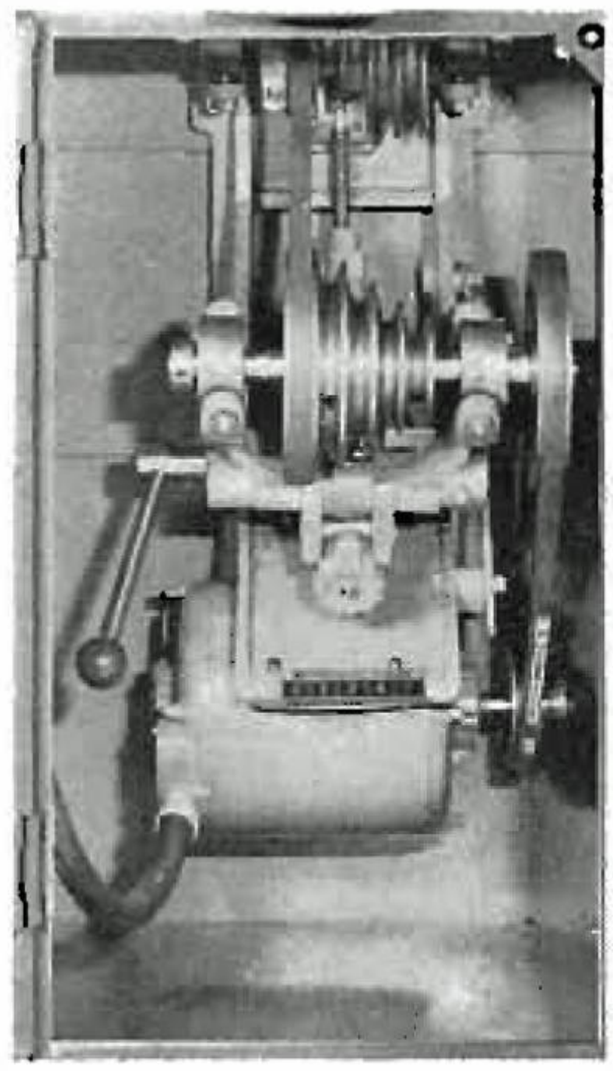

**Fig. 11a Craftsman Drive Unit**

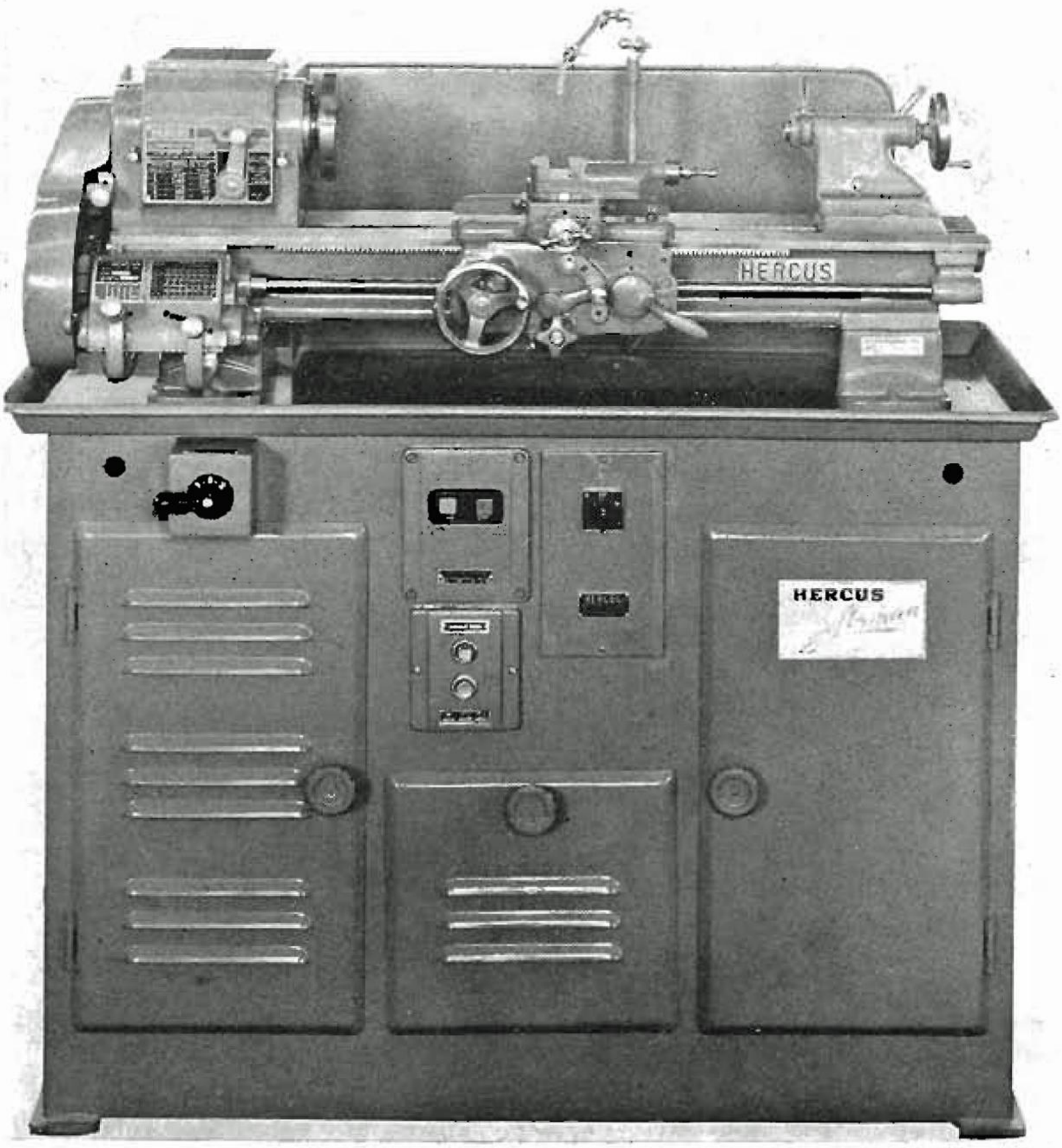


**Fig. 11 Craftsman Lathe**

CHAPTER TWO

# CUTTING TOOLS AND THEIR USES

Nothing affects the performance and efficiency of a lathe so much as the grinding of the cutting tools, and hence the need for every lathe operator to know something of the design and sharpening of tools for lathe work.

In deciding what type of tool is best suited for a particular application the best guide is experience. The information given on the following pages is intended as a guide for those with no previous experience in the use of metal cutting tools, and should be regarded as general information only, since no two lathe jobs are exactly alike or require exactly the same tool settings or angles.

The most popular types of lathe tools are those ground from high-speed steel tool bits which may be held directly in the lathe tool-post or mounted in suitable tool holders as per Fig. 12.

Fig. 12 R.H., Straight and L.H. Tool Holders

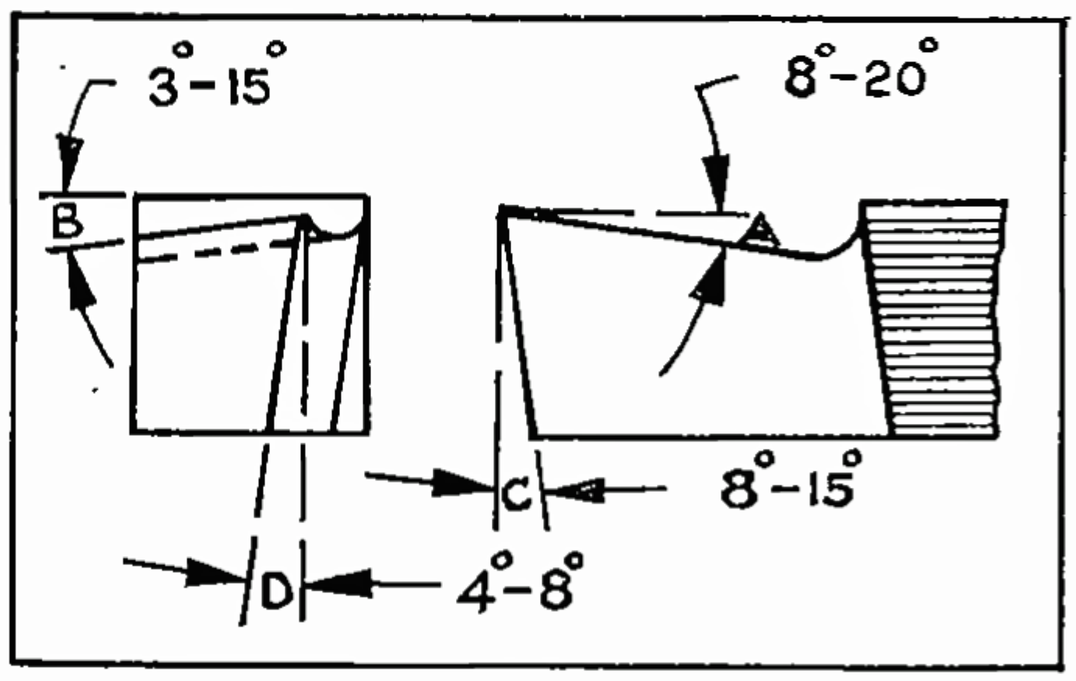


Fig. 13 Angles of Cutting Tools

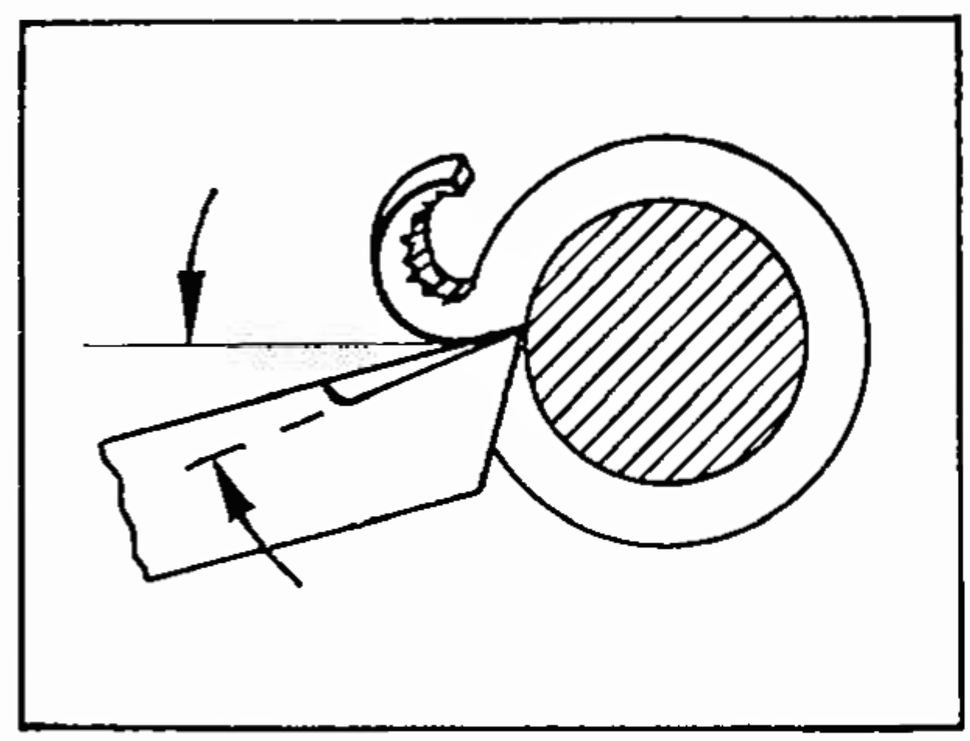

Fig. 14 Effect of Rake on Shearing Action of Lathe Tool

The correct shape of a tool depends upon the type of work it is to perform, and hence a tool bit may be ground to almost any shape to suit a particular purpose. In all cases, however, cutting edges with suitable clearances and cutting angles must be provided. The principal angles which are required to be ground on a lathe tool bit are shown in Fig. 13. These being top rake angle "A", side rake angle "B", front clearance angle "C", and side clearance angle "D". The purpose of the top rake angle is to present the cutting edge to the work so that the material is sheared with an upward rather than a forward thrust, as per Fig. 14, thus greatly reducing the strain on both the tool and the machine. The side rake angle performs a similar function as the tool is fed sideways into the material.

The provision of top and side rake makes for free cutting and ease of feeding the tool into the work; excessive rake, however, will cause the tool to be dragged forward into the work or to "dig in", with resultant damage to both tool and workpiece. As a general rule, soft and ductile metals require much greater rake angles than harder and more brittle metals.

The purpose of front and side clearance is to prevent the tool from rubbing against the work. Increasing the clearance angle makes for free cutting and ease of feeding the tool into the work, but excessive clearance will weaken the cutting edge, causing it to fracture, chatter, or wear excessively. Again, much greater clearance angles are required for machining soft and ductile materials, while a minimum of clearance is used when turning the harder grades of steel, cast iron or bronze.

## Height of Cutting Tools

On most types of plain turning or boring work the tool performs better if set approximately 2 degrees above centre or $^1/_{64}$ to $^1/_{32}$ per inch of diameter of the workpiece as per Fig. 15. This applies only to tools used for parallel turning or boring. Tools which must work to the centre of the workpiece, such as facing or parting off tools, should always be set exactly on centre, as should tools for screwcutting or taper turning, see pages 44 and 55.

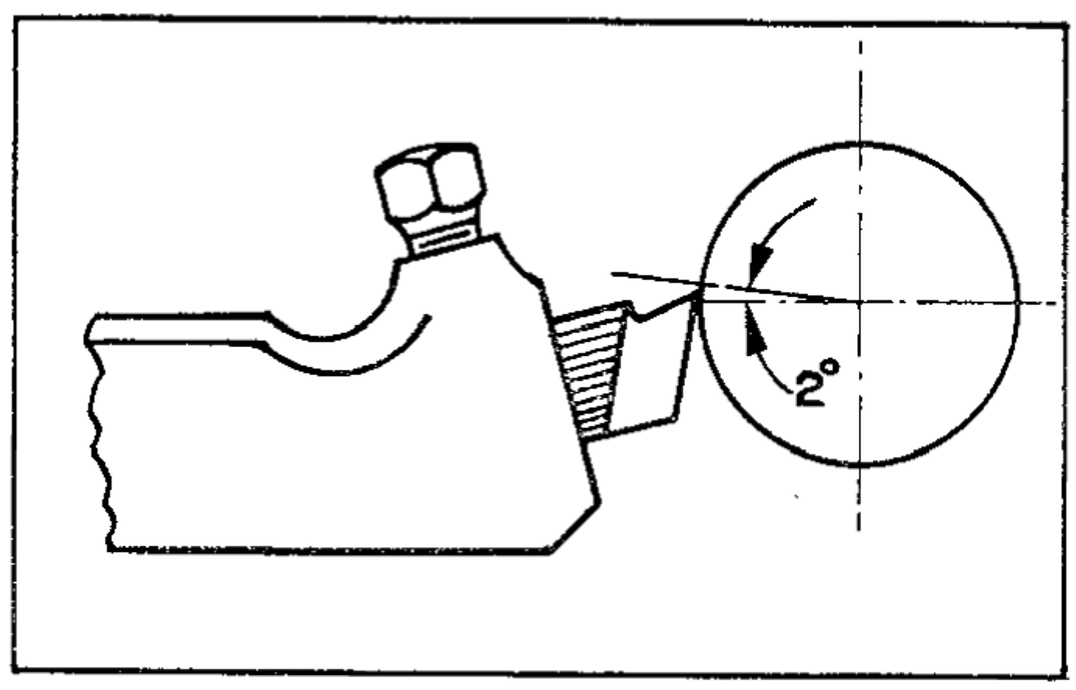


**Fig. 15 Cutting Edge above centre**

The cutting edge of the tool should not extend any further beyond the edge of the toolholder than is necessary. Excessive overhang at this point will cause the tool to dig in or chatter badly.

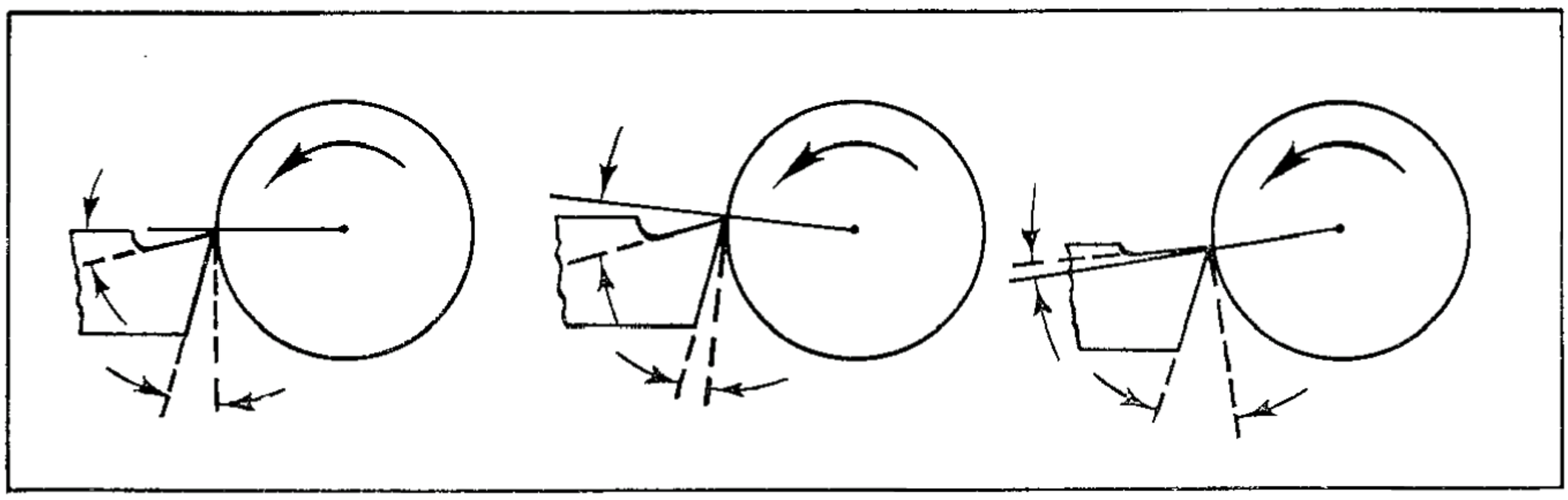

**Fig. 16 Effects of setting cutting edge on, above or below centre**

Fig. 16 shows in an exaggerated form the effect on the rake and clearance angles of setting the tool above or below centre; except where it is found necessary to set the tool at an excessive height above centre, however, this effect is slight and may be ignored.

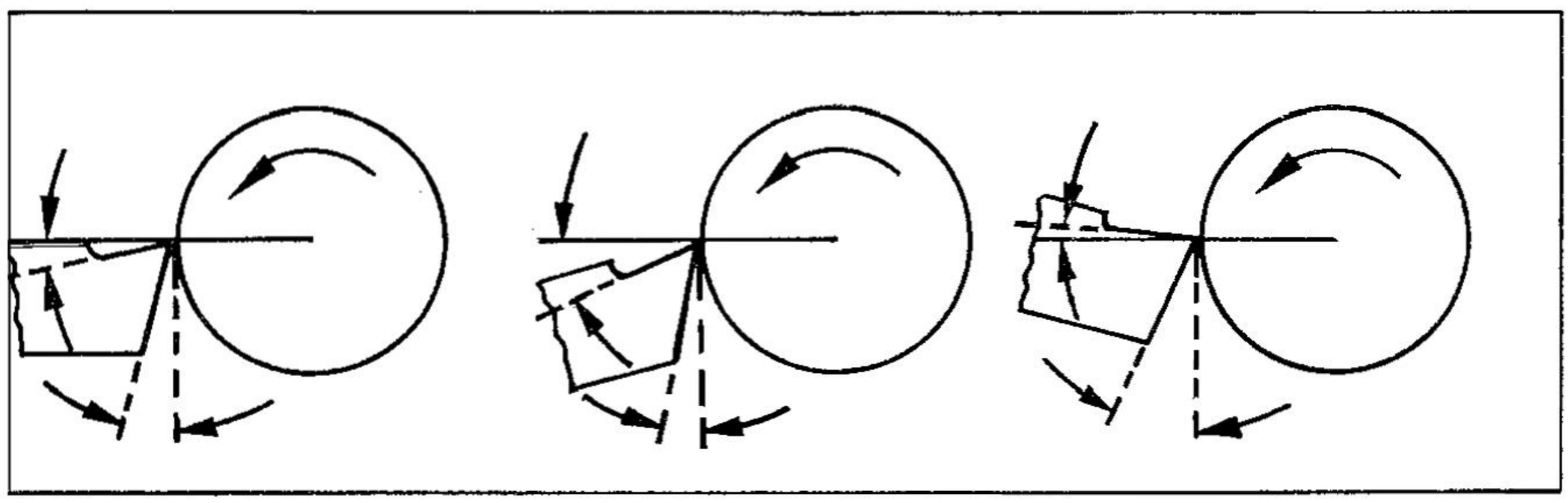

**Fig. 17 Effects of tilting the tool shank on Rake and clearance angles**

Fig. 17 shows the effect on rake and clearance, of the angle at which the tool shank is mounted in the holder, and this should always be taken into account when grinding the tool-bit.

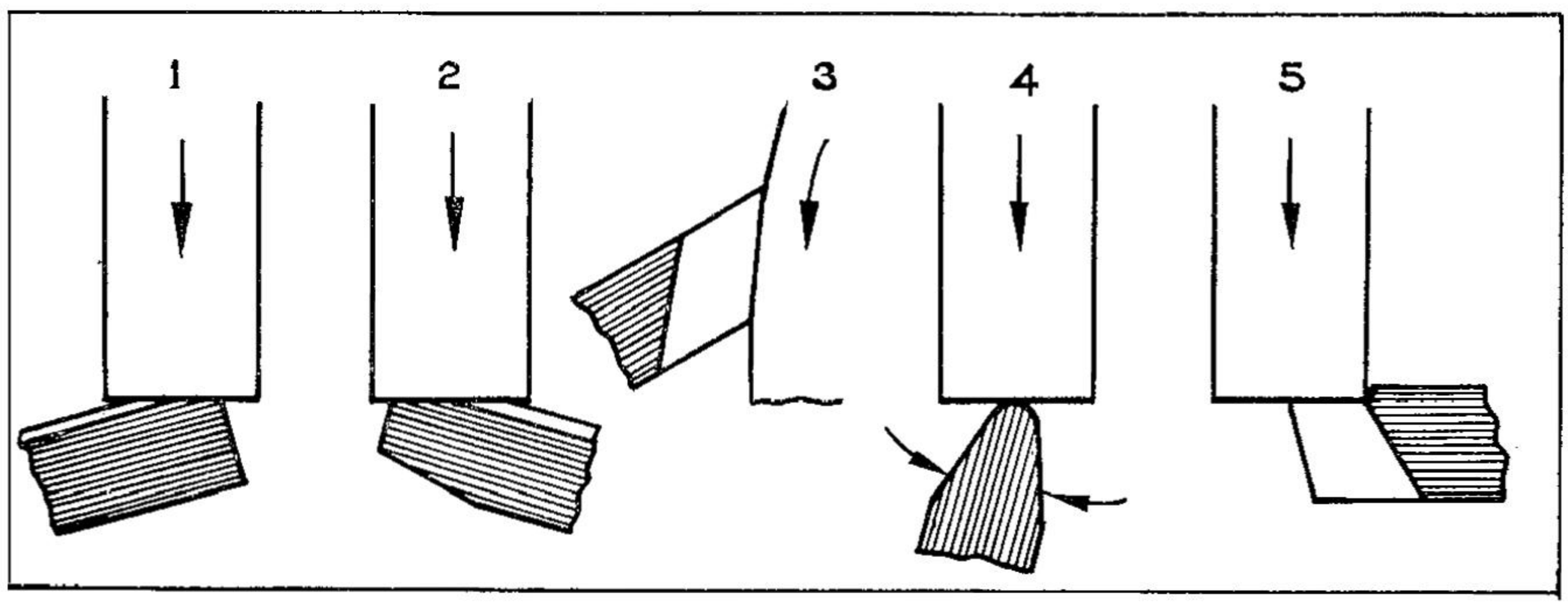


**Fig. 18 Sequence of grinding a Lathe Tool**

Fig. 18 shows the various stages in grinding a cutting tool for general lathe work. The procedure, starting from an unground tool-bit, is usually as shown, first, to grind the left side clearance; 2nd, the right side clearance; 3rd, grind the front clearance; 4th, grind the end form or radius; and 5th, grind the top rake.
A tin of water should be kept at hand when grinding, and the point of the tool dipped in this at frequent intervals to prevent overheating with consequent spoiling of the temper of the steel.

## Rough Turning

Figs. 19 and 20 show the type of tool most suitable for heavy roughing cuts designed to reduce the size of the workpiece to the approximate dimensions required.
The cutting edge of this tool is straight with a very slight radius on the point as per Fig. 19. This radius will prevent the point of the tool from breaking down without hampering its free-cutting qualities.
When heavy cuts are being taken with a tool of this type the tool-bit should, if possible, be set so that spring or slipping of the tool under pressure will cause it to move away from the workpiece as shown by the arrow A, Fig. 20.

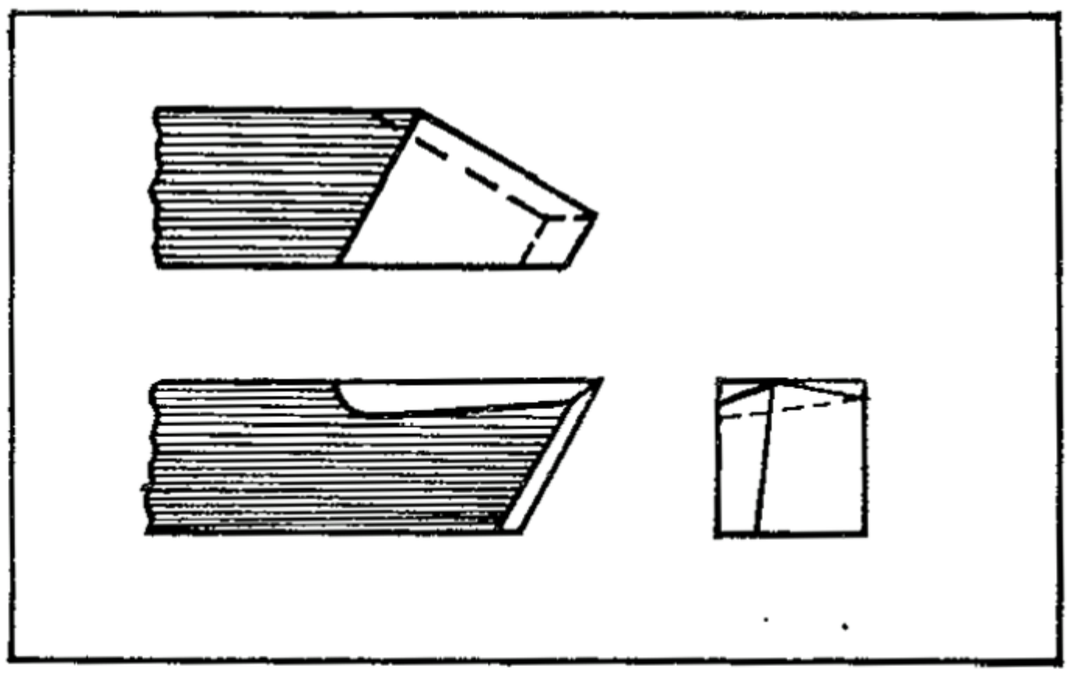

Fig. 19 Details of R.H. Roughing Tool

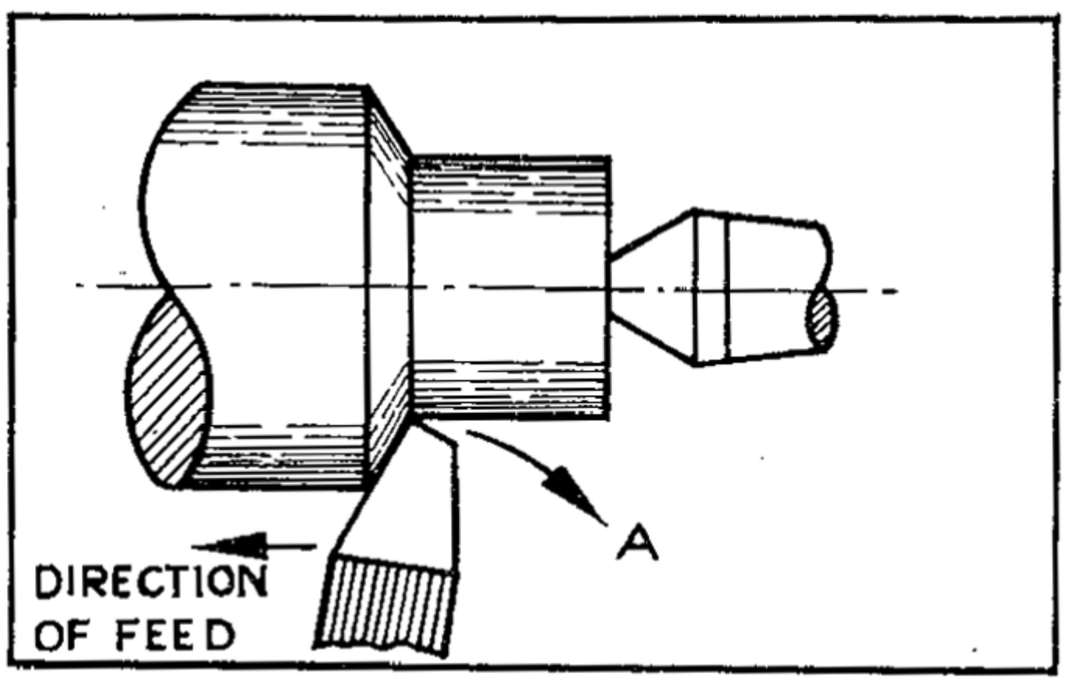


Fig. 20 Application of R.H. Roughing Tool

## Finish Turning

Figs. 21 and 22 show a round-nosed turning tool suitable for taking the final finishing cuts. This tool is similar in shape to the roughing tool, except that the point of the tool is rounded to a much greater radius (approx. $\frac{1}{32}$" - $\frac{1}{16}$"). This in conjunction with a high spindle speed and a light cut will produce a very smooth finish.

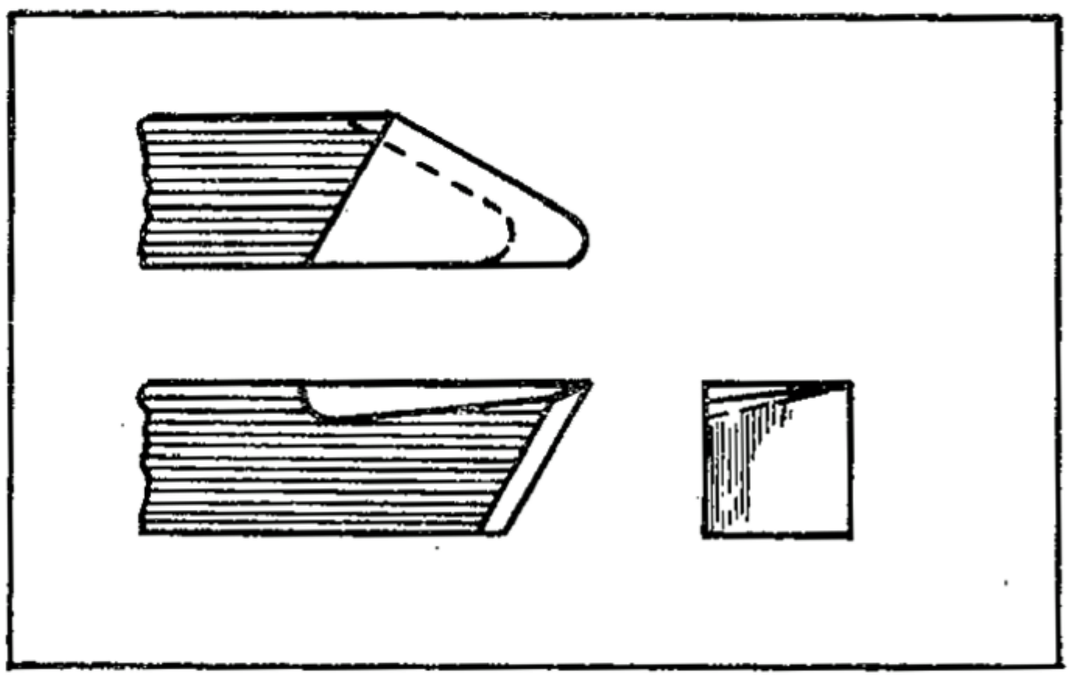

Fig. 21 Details of R.H. Finishing Tool

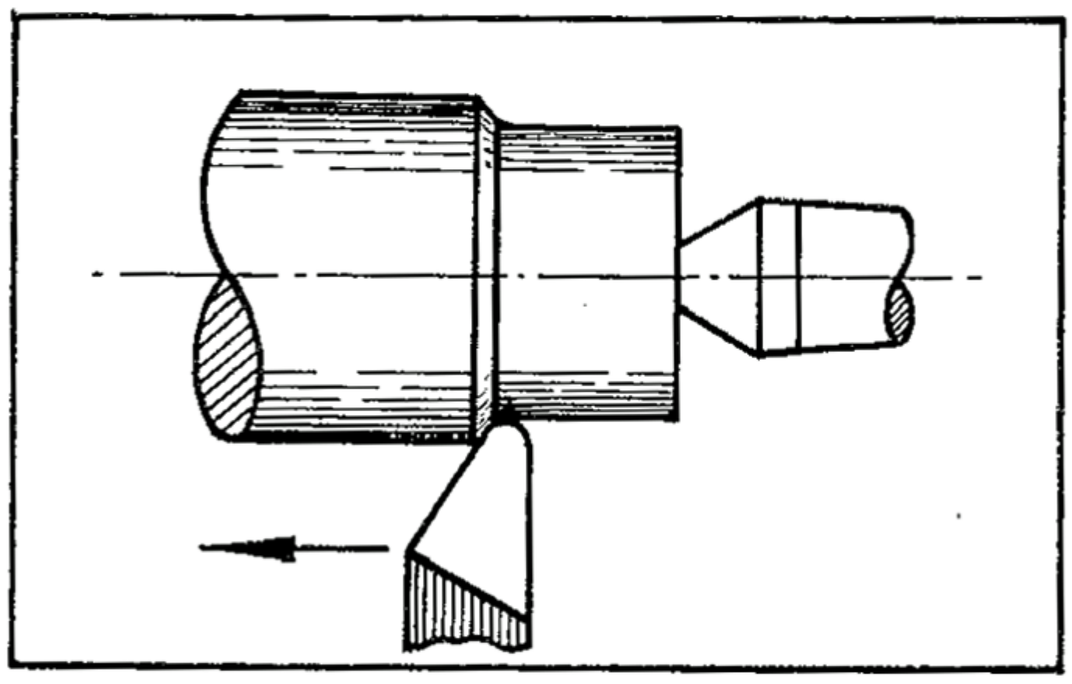

Fig. 22 Application of R.H. Finishing Tool

Honing of the cutting edge of this tool with an oil stone after grinding also assists in obtaining a good finish.

## Right and Left Hand Tools

A tool is designated right or left hand according to the side of the cut on which it is situated when in operation.

Roughing and finishing tools shown in Figs. 19-20 and 21-22 respectively are designed to cut from right to left, and are hence situated, when in operation, on the right-hand side of the cut and therefore known as right-hand tools. Left-hand tools, designed to cut from left to right, and hence situated on the left-hand side of the cut when in operation, are

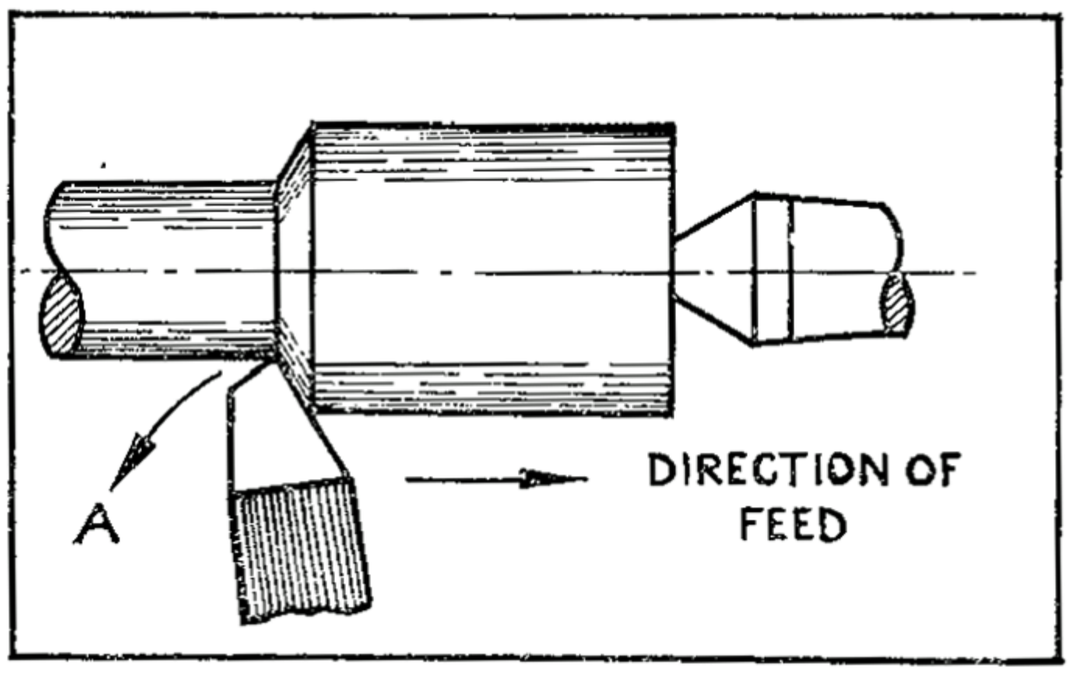


Fig. 23 Application of L.H. Roughing Tool

the exact opposite to their counterpart right-hand tools. Application of a L.H. roughing tool is illustrated in Fig. 23. Here again it will be noted that the tool has been set so that slipping under pressure will cause it to move away from the work as shown by arrow A.

## Round Nose Tool

The round nose tool, Figs. 24 and 25, is very convenient for reducing the diameter of a shaft in the centre. The top of this tool is ground to give top, but no side rake, to allow for feeding in either direction.

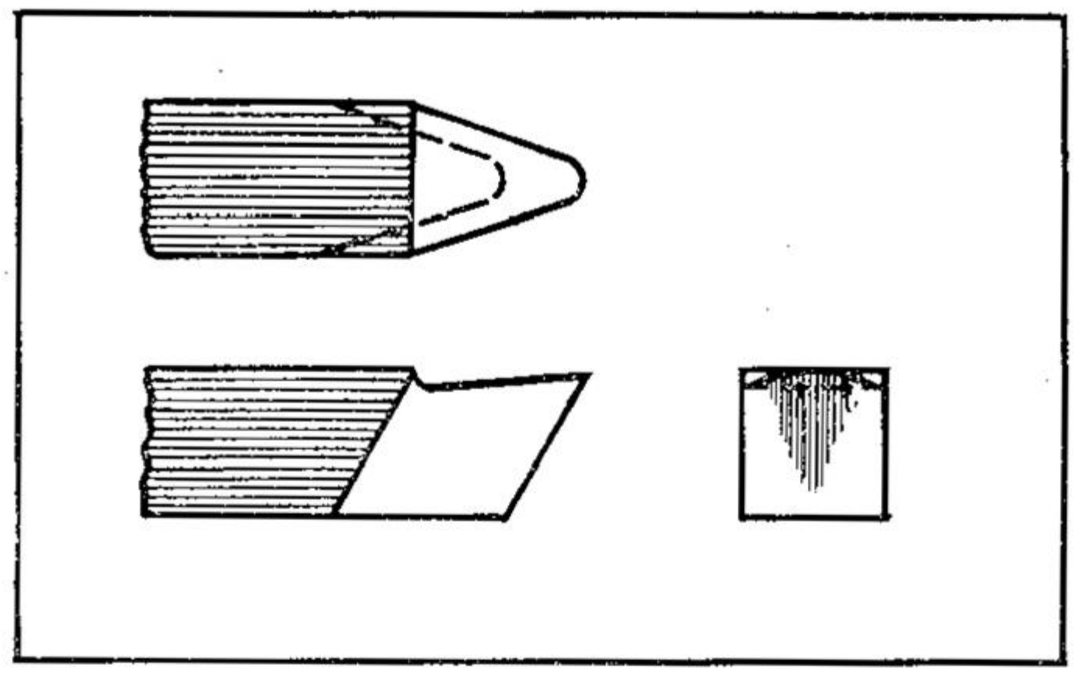

Fig. 24 Details of Round Nose Tool

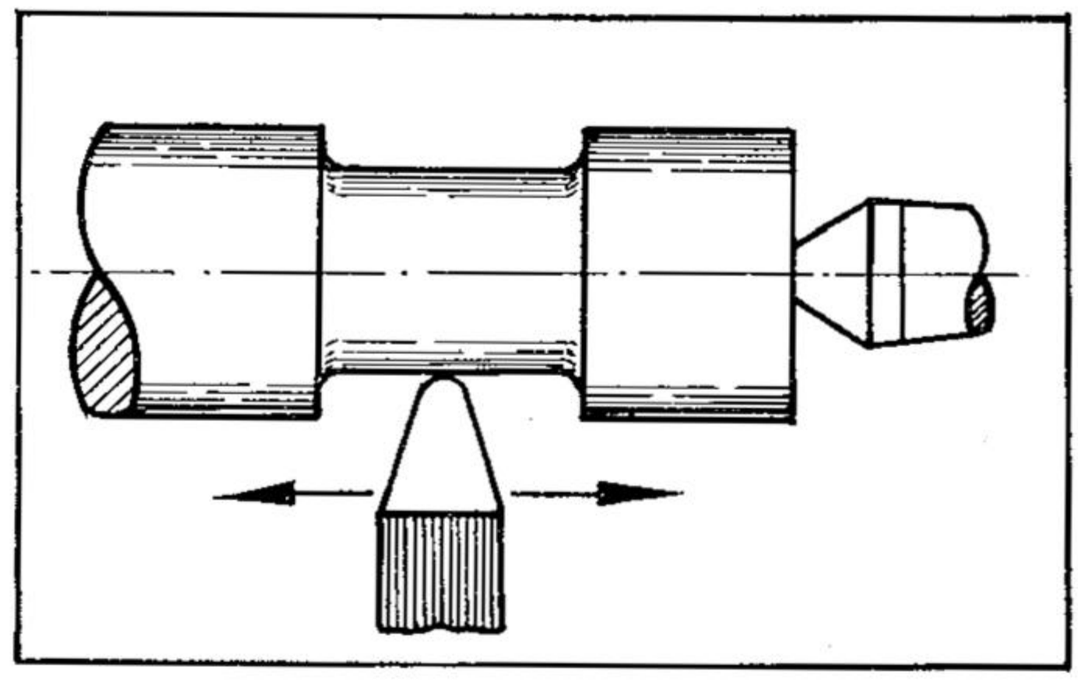

Fig. 25 Application of Round Nose Tool

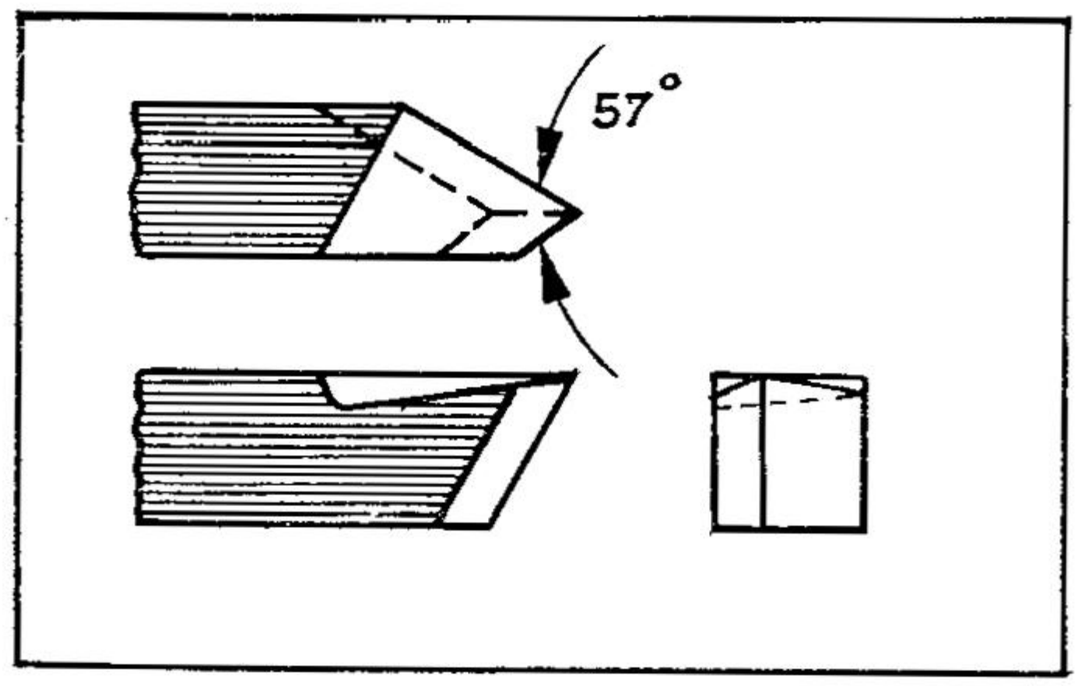


Fig. 26 Details of R.H. Facing Tool

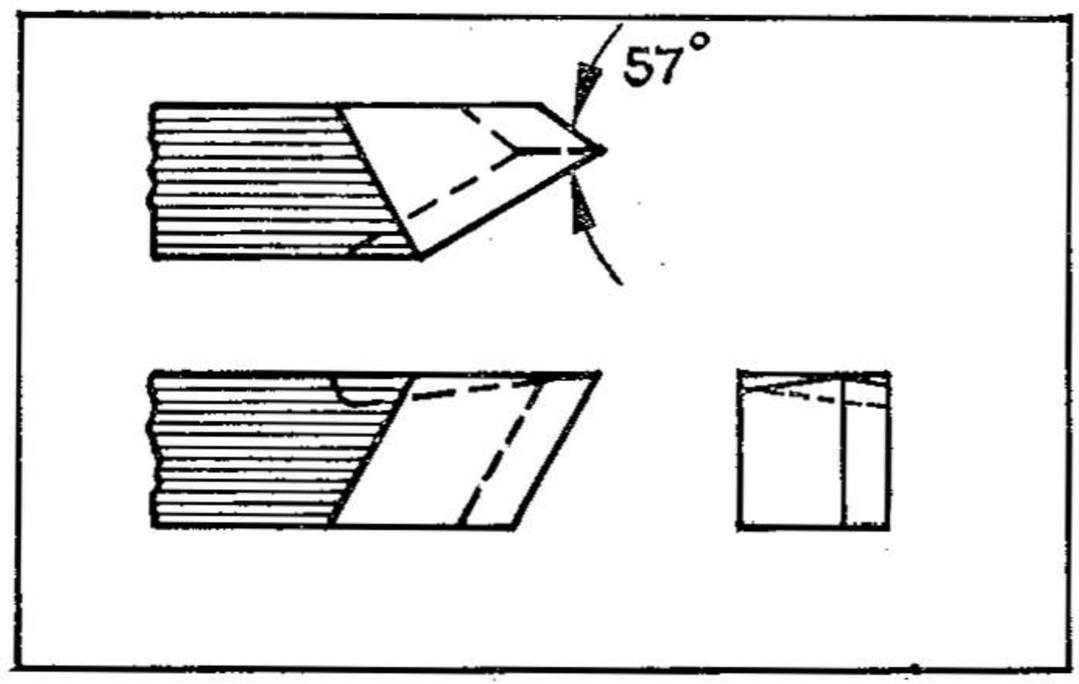


Fig. 27 Details of L.H. Facing Tool

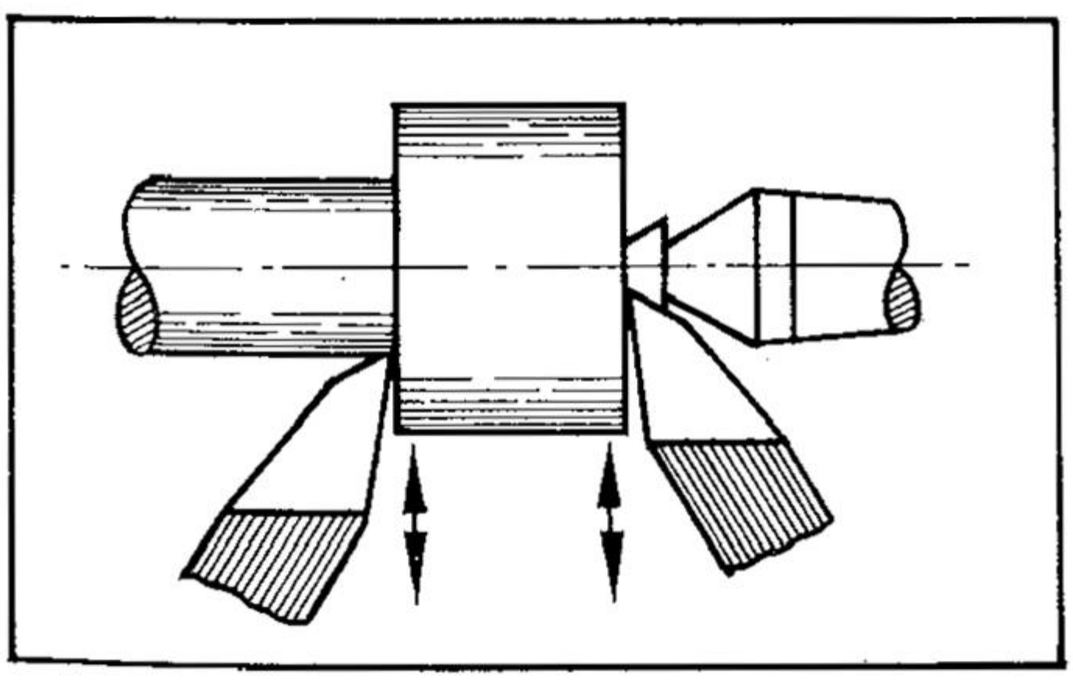

Fig. 28 Application of Facing Tools

## Facing Tools

Figs. 26 and 27 show right and left hand facing tools used for facing the ends of shafts and other similar jobs. The sharp point of the tool is ground to an angle of 57° to avoid interference with the tailstock centre.

These tools should be set with the long face almost parallel to the end of the shaft, and give best results if fed outwards from the centre as per Fig. 28. Care must be taken to avoid bruising the point of the R.H. facing tool against the tailstock centre. Facing tools generally require more side clearance than other types of tools.

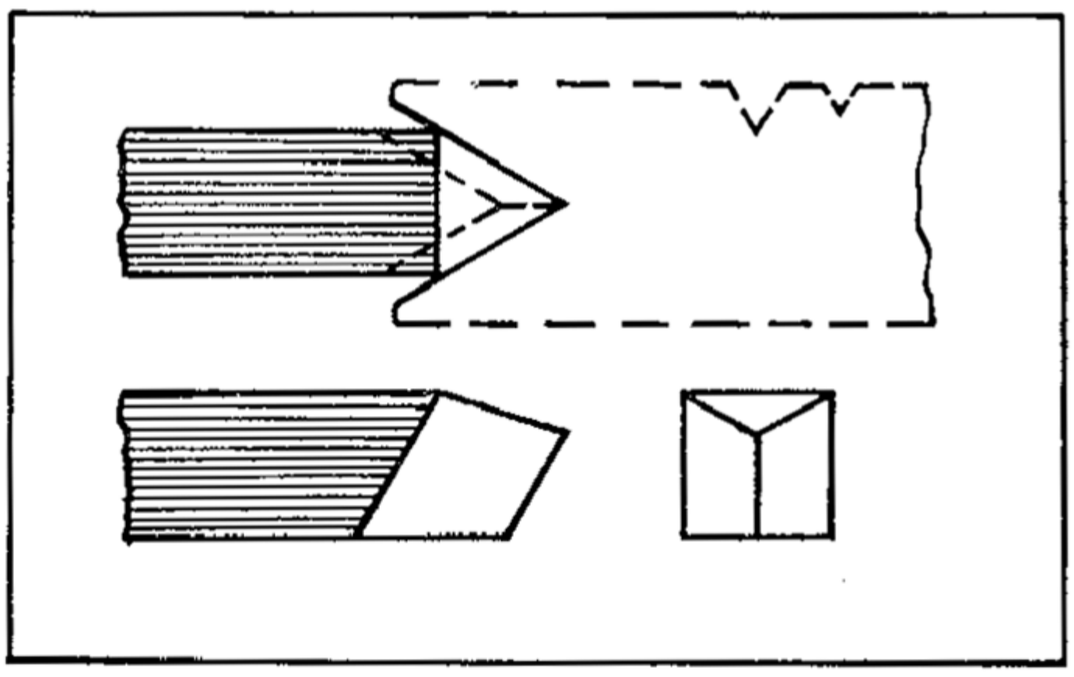

Fig. 29 Details of Screw-cutting Tool

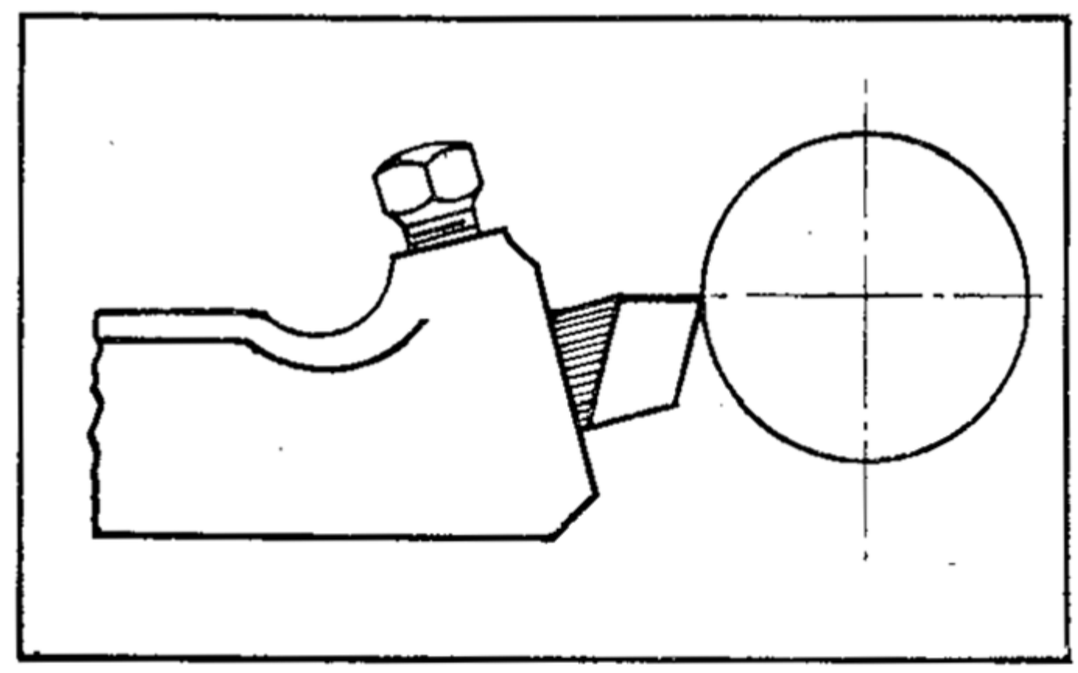

Fig. 30 Application of Screw-cutting Tool

## Screwing Tools

The standard type of screw-cutting tool is shown in Figs. 29 and 30. This tool should be flat on top and the sides ground to suit the form of the thread to be cut (see Chapter Eight). Tools for screw-cutting should always be set exactly on centre.

## Parting Tool

The "parting off" tool, Figs. 31 and 32, is usually ground flat on top and should be set exactly on centre. Clearance of about 5° is provided on the front and approximately 3° on each side. Side relief of approximately 2° per side is provided behind the cutting face.

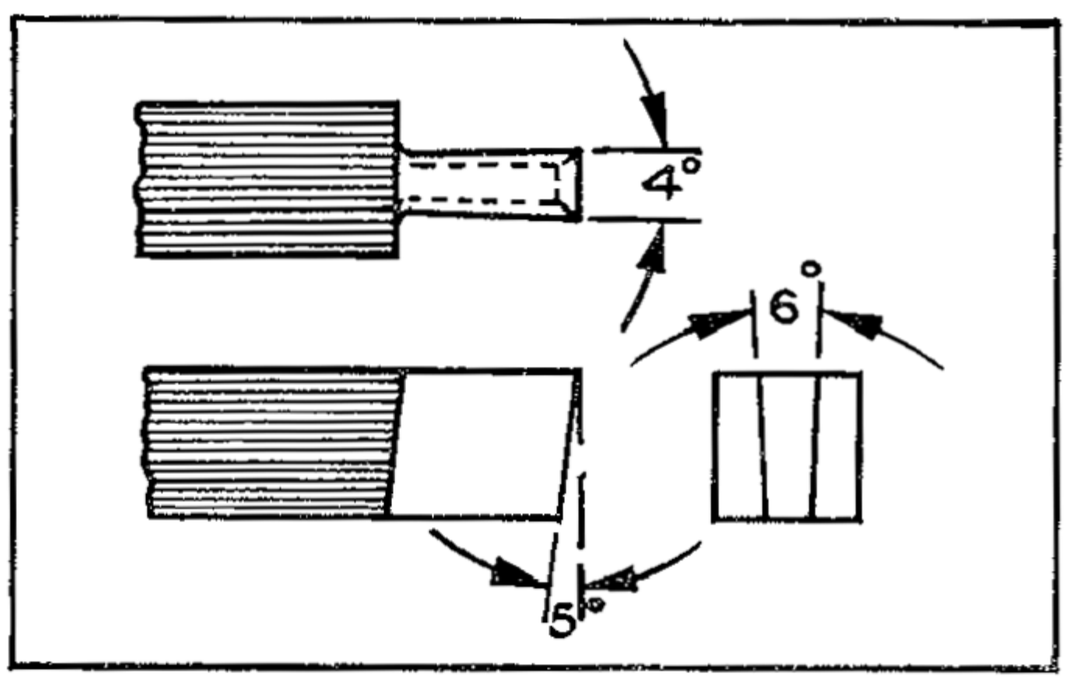


Fig. 31 Details of Parting Tool

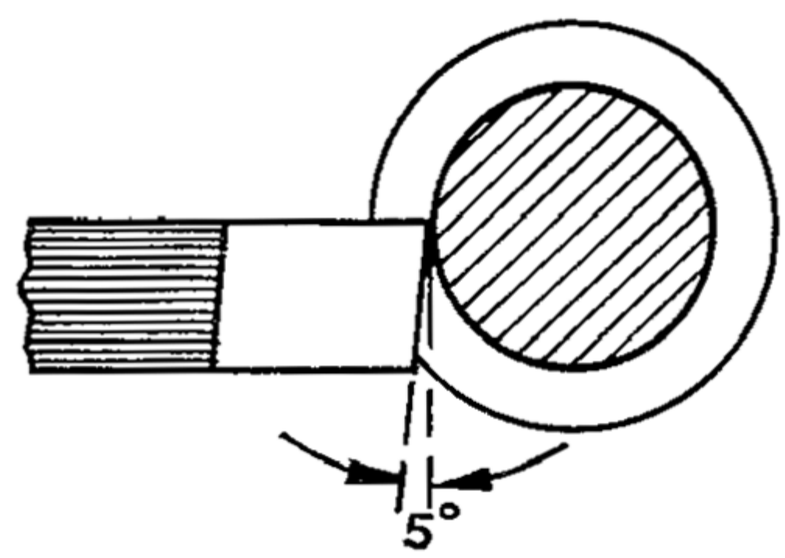


Fig. 32 Application of Parting Tool

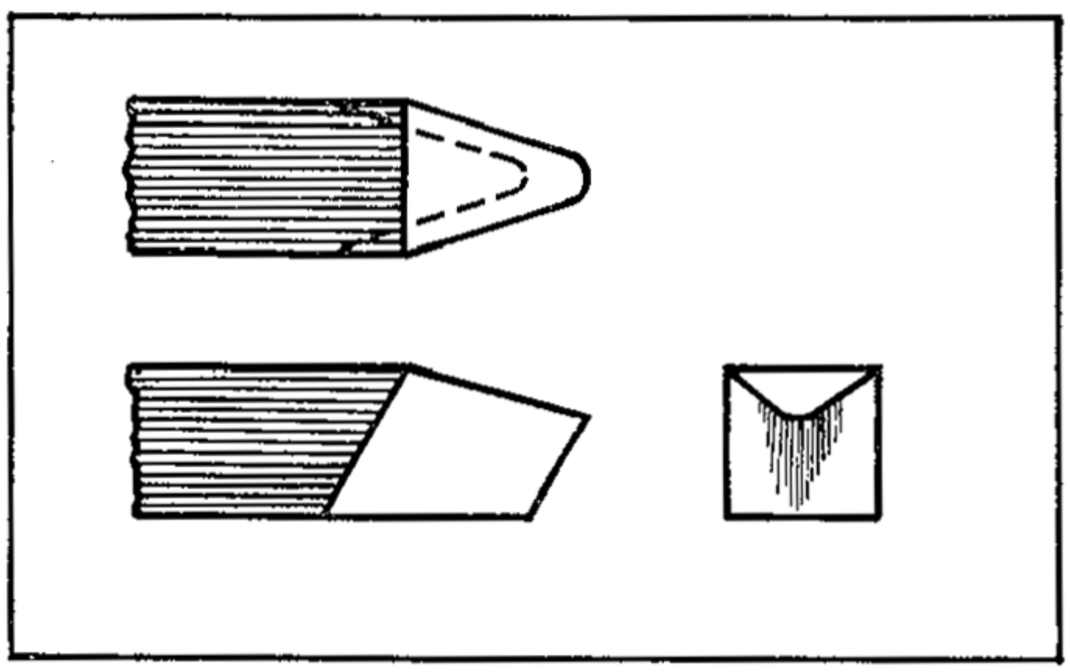

Fig. 33 Brass Turning Tool for use in Tool Holder

## Brass Turning Tool

The most popular type of brass turning tool is shown in Fig. 33. This tool is similar in shape to the round nose tool, Figs. 24 and 25, except that it is ground flat on top with no side or top rake to check the tendency for tools to "chatter" or "dig in" when machining brass. This tool should always be set exactly on centre as per Fig. 30.

## Boring and Internal Screwing Tools

Boring tools, Fig. 34, are ground in the same manner as the left-hand turning tool, see page 16, while the internal screwing tool is ground in the same manner as the external screwing tool, see page 18. In both cases, however, a greater amount of front clearance must be provided to prevent the heel of the tool from fouling the bore of the workpiece, as per Fig. 35.

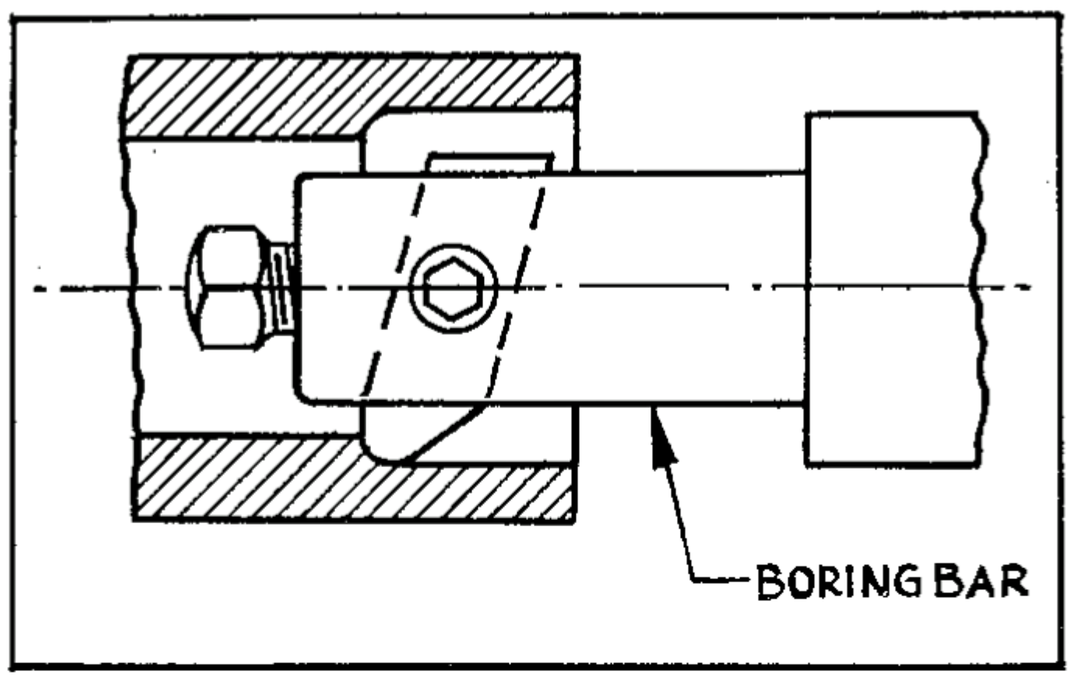


**Fig. 34 Application of Boring Tool**

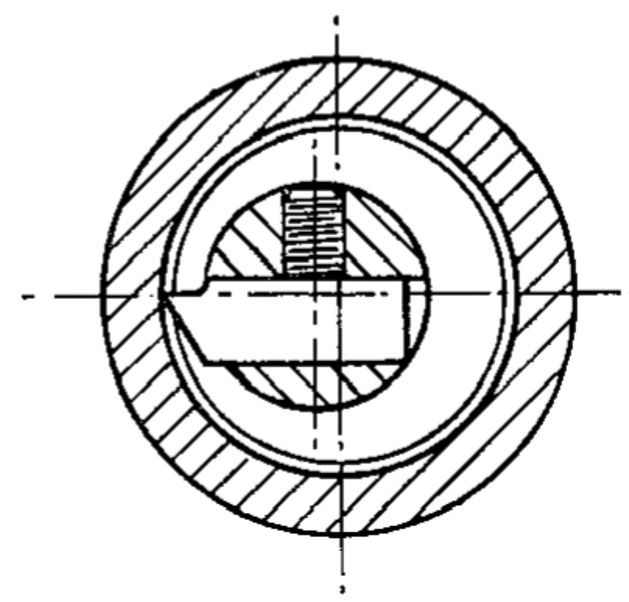

**Fig. 35 Internal Screwing Tool, showing need for increased front clearance**

## Chip Breakers

Turning steel at high speeds sometimes results in the formation of long, continuous chips which can easily become tangled in the working parts of the machine. These are dangerous and cumbersome to handle, and when such chips are met with it is advisable to incorporate a chip breaker in the cutting tool in order to prevent their formation. This is accomplished by grinding either a shoulder or a groove slightly behind the cutting edge, so that the chip is made to curl tightly against the work, breaking into short sections as it does so. Fig. 36 illustrates some of the different forms of chip breakers which are in common use.

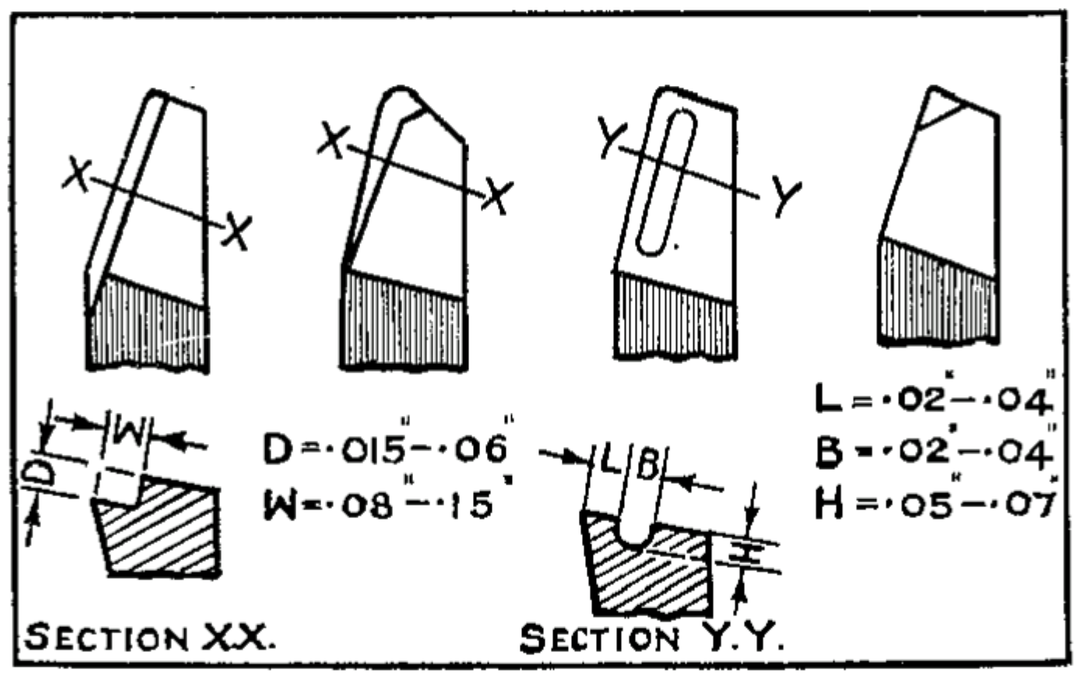


**Fig. 36 Chip Breaking Grooves**

## Cutting Speeds

The principal factors governing the cutting speed are: the nature of the material being machined, the type and shape of the cutting tool, the feed and depth of cut, the size and nature of the workpiece, the power, rigidity and condition of the machine, and the degree of accuracy and finish desired. Table 3 gives an indication of cutting speeds for various materials for given depths of cut and rates of feed, based on a high speed steel tool and a theoretical life between tool sharpening of one hour. These speeds are based on optimum conditions, assuming consistency of material, solid and securely held workpiece, and a powerful machine in good condition. In many instances a slower speed would be necessary to prevent chattering or because of some other limiting condition.

## Table 3 Cutting Speeds in Surface Feet per Minute

| Depth of Cut | Feed | STEEL | | | CAST IRON | |
|---|---|---|---|---|---|---|
| | | Free Cutting | Medium Carbon | High Tensile | Medium | Hard |
| $\frac{1}{32}$ | ·005 | 540 | 290 | 130 | 225 | 125 |
| | ·010 | 460 | 240 | 116 | 205 | 115 |
| | ·015 | 380 | 205 | 100 | 170 | 95 |
| | ·020 | 320 | 170 | 80 | 145 | 80 |
| $\frac{1}{16}$ | ·005 | 450 | 240 | 115 | 205 | 115 |
| | ·010 | 390 | 200 | 95 | 170 | 95 |
| | ·020 | 280 | 150 | 70 | 125 | 70 |
| | ·030 | 220 | 120 | 57 | 100 | 54 |
| $\frac{3}{32}$ | ·010 | 340 | 190 | 86 | 155 | 85 |
| | ·020 | 250 | 130 | 62 | 110 | 60 |
| | ·030 | 200 | 105 | 50 | 85 | 48 |
| | ·040 | 160 | 90 | 42 | 75 | 42 |
| $\frac{1}{8}$ | ·010 | 310 | 160 | 77 | 140 | 78 |
| | ·020 | 225 | 120 | 57 | 100 | 56 |
| | ·030 | 175 | 95 | 45 | 80 | 46 |
| | ·040 | 150 | 80 | 38 | 70 | 40 |
| $\frac{3}{16}$ | ·020 | 190 | 105 | 50 | 85 | 52 |
| | ·030 | 160 | 85 | 40 | 72 | 40 |
| | ·040 | 130 | 70 | 32 | 58 | 33 |
| | ·060 | 100 | 54 | 24 | 45 | 25 |

### Feed and Depth of Cut

In roughing out the workpiece to its approximate shape and size, the aim is generally to achieve the fastest rate of metal removal which the power of the machine and the strength of the tool and workpiece will permit. To this end, heavy cuts are normally preferable to coarse feeds. Tests have shown that where the depth of the cut is doubled and the feed rate halved, the cutting speed can be increased by up to 25%, with a proportionate increase in the rate of metal removal. The optimum depth feed ratio is reached with a depth of cut approximately 10 times the rate of feed per revolution of the spindle.

The surface of castings, forgings and hot rolled steel bars usually carries a hard abrasive scale which quickly dulls the cutting edge of the tool. To overcome this, the first roughing cut on materials of this nature should, whenever possible, be taken deep enough to get beneath the scale.

### Finish Turning

Final turning operations aim at accuracy and a fine, smooth finish, rather than a high rate of stock removal. This is achieved by taking light cuts at higher speeds with a tool having a larger radius, making possible a faster feed rate than would normally be used.

### Tungsten Carbide Tools

Tungsten carbide tipped tools make possible much greater cutting speeds than can be achieved with high speed steels, and are used principally for production work on high powered machines to give a maximum rate of metal removal

## Table 4 Speeds in Surface Feet per Minute and equivalent R.P.M.

| Surface Speed | 40 | 60 | 80 | 100 | 120 | 140 | 160 | 180 | 200 | 225 | 250 | 275 | 300 | 350 | 400 | 450 | 500 |
|---|---|---|---|---|---|---|---|---|---|---|---|---|---|---|---|---|---|
| Work Diameter | REVOLUTIONS PER MINUTE | | | | | | | | | | | | | | | | |
| ¼″ | 610 | 917 | 1220 | 1528 | 1834 | 2140 | 2445 | 2750 | 3056 | 3440 | 3820 | 4200 | 4584 | 5348 | 6112 | 6878 | 7640 |
| ½″ | 306 | 460 | 610 | 764 | 917 | 1070 | 1220 | 1375 | 1528 | 1720 | 1910 | 2100 | 2292 | 2675 | 3056 | 3440 | 3820 |
| ¾″ | 203 | 306 | 408 | 508 | 610 | 711 | 813 | 914 | 1016 | 1146 | 1273 | 1400 | 1528 | 1783 | 2038 | 2290 | 2547 |
| 1″ | 153 | 230 | 306 | 382 | 460 | 535 | 610 | 690 | 764 | 860 | 955 | 1050 | 1146 | 1330 | 1528 | 1720 | 1910 |
| 1½″ | 102 | 153 | 203 | 254 | 306 | 356 | 408 | 457 | 508 | 573 | 636 | 700 | 764 | 890 | 1016 | 1146 | 1273 |
| 2″ | 76 | 115 | 153 | 190 | 230 | 267 | 306 | 344 | 382 | 430 | 477 | 525 | 573 | 668 | 764 | 860 | 955 |
| 2½″ | 61 | 92 | 122 | 153 | 184 | 213 | 245 | 275 | 306 | 343 | 382 | 420 | 458 | 534 | 610 | 687 | 764 |
| 3″ | 51 | 76 | 102 | 127 | 153 | 178 | 203 | 228 | 254 | 286 | 318 | 350 | 380 | 445 | 508 | 573 | 636 |
| 4″ | 38 | 57 | 76 | 96 | 115 | 134 | 153 | 172 | 190 | 214 | 238 | 262 | 286 | 334 | 382 | 430 | 477 |
| 5″ | 31 | 46 | 61 | 76 | 92 | 107 | 122 | 138 | 153 | 171 | 191 | 210 | 230 | 267 | 306 | 343 | 382 |
| 6″ | 25 | 38 | 51 | 64 | 76 | 89 | 102 | 114 | 127 | 143 | 160 | 175 | 190 | 222 | 254 | 286 | 318 |

and long tool life. These tools are ground with a minimum of clearance and, with no rake or even with negative rake, consequently they absorb more power to shift a given amount of stock, and can only show to best advantage on powerful and rigid machines. A special grade of grinding wheel must be used for sharpening carbide tipped tools, see Chapter Ten.

### Cutting Fluids

The use of a suitable cutting fluid to control the heat generated by the tool improves tool life and makes possible increases of up to 30% in cutting speed. For further information on coolants see Chapter Ten.

### Non-Ferrous Materials

The machinability of non-ferrous materials varies greatly, and these require specially ground cutting tools and greatly differing speeds. Table 5 gives approximate tool angles and cutting speeds.

When machining non-metallic materials it should be borne in mind that these are poor conductors of heat. As a consequence the heat generated in machining is not as readily dispersed throughout the body of the material, so that localised heating can become a problem, except where the use of a coolant is possible.

### Allowances for Finish

The amount of stock which must be left on a job for finishing operations is dependent on the size and shape of the workpiece and the type and form of raw material from which it is made. Removal of the outer skin from forgings,

## Table 5 Cutting Speeds and Tool Angles for Non-Ferrous Materials.

| MATERIAL | CUTTING SPEED | TOOL ANGLES IN DEGREES | | | |
|---|---|---|---|---|---|
| | Feet per Minute | Front Clearance | Side Clearance | Back Rake | Side Rake |
| Aluminium—Free Cutting | 600 — 1000 | 9 | 9 | 30 | 15 |
| Aluminium—High Tensile | 300 — 600 | 8 | 8 | 25 | 10 |
| Brass | 400 — 800 | 5 | 5 | 0 | 0 |
| Bronze | 120 — 200 | 8 | 10 | 6 | 8 |
| Die-Castings—Zinc | 180 — 300 | 8 | 8 | 8 | 10 |
| Magnesium Alloy | 500 — 800 | 10 | 10 | 8 | 6 |
| Stainless Steel | 70 — 120 | 8 | 6 | 8 | 4 |
| Monel | 60 — 100 | 7 | 6 | 7 | 4 |
| Copper | 80 — 150 | 5 | 5 | 20 | 25 |
| Plastics—Cast Resin | 200 — 400 | 8 | 10 | 20 | 20 |
| Plastics—Bonded Fibre | 250 — 600 | 7 | 7 | 20 | 20 |
| Rubber | 160 — 200 | 10 | 12 | 25 | 25 |
| Nylon | 400 — 700 | 5 | 5 | 10 | 30 |

castings or steel bars frequently releases internal tensions which could cause distortion during or after rough machining operations. Distortion may also result from drilling a hole through the centre of a bar, screwing a coarse thread, or any form of heat treatment.

**FINISH TURNING.** An allowance of 1/64th to 1/32nd on the diameter for a finishing cut is generally sufficient except for very large pieces or shapes subject to excessive distortion such as long slender shafts or large diameter pieces of thin section. For shapes such as these it is advisable to take two or more cuts of progressively decreasing amounts to reach the finished size. It is worth noting that a high speed steel tool-bit frequently causes less distortion on finishing operations than a carbide tipped tool.

When close tolerances must be held to by finish turning, it may be of assistance to set the compound rest to an angle of 5° 45′ as shown in Fig. 37. In this position every .001″ movement shown on the graduated collar represents an inward movement of the tool of .0001″.

The use of a final finishing operation such as filing, polishing, lapping or grinding does not eliminate the need for a finishing cut after rough turning.

**FILING.** The amount of stock to be removed by filing should be kept to a minimum, usually .001″ to .0015″.

**POLISHING AND LAPPING.** The amount removed by these operations is small and is generally not in excess of .0005″.

**GRINDING.** The normal grinding allowance is .008″ to .010″ on outside diameters and .004″ to .006″ on internal diameters. Where grinding is to be carried out after heat treatment the allowance on outside diameters is increased to approximately .015″ to .020″ to allow for distortion. Except for holes of considerable length no extra allowance is usually necessary on internal diameters. On engineering drawings the symbol "G" is used to designate a ground surface and indicates to the turner that he must leave a grinding allowance.

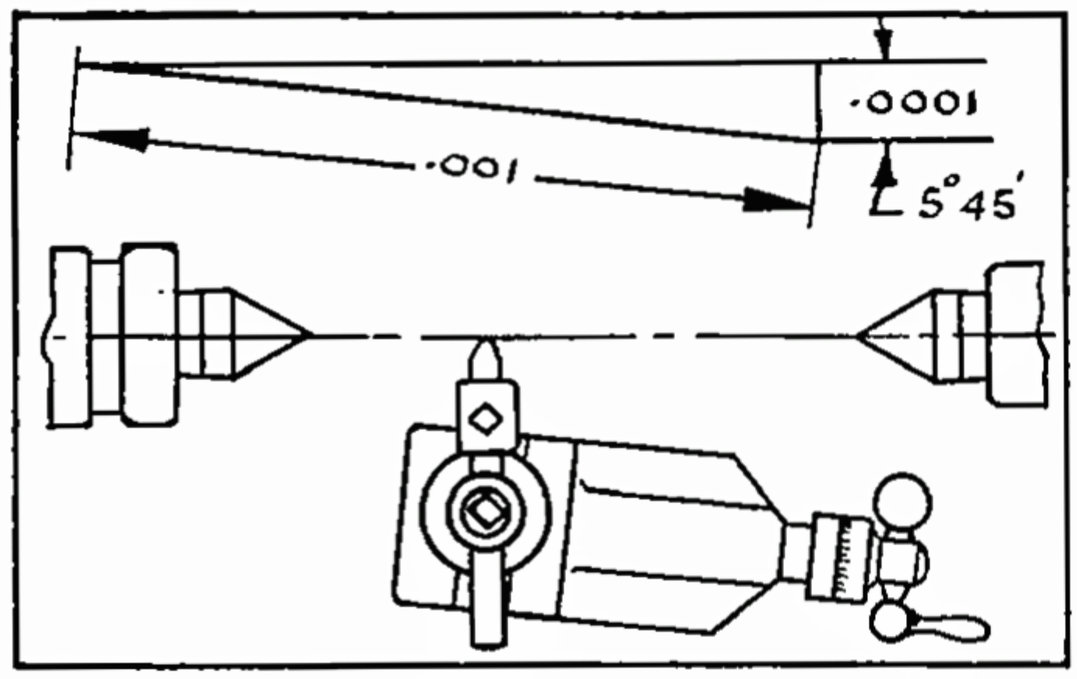


**Fig. 37 Compound Rest set for Fine in Feeding**

CHAPTER THREE

# MEASUREMENTS

One of the basic requirements for the production of accurate work on a lathe is a means of taking accurate measurements. Many tools and devices are available for this purpose; those most commonly encountered in lathe work are the steel rule, calipers, vernier calipers and micrometers.

For general turning work where an extreme degree of accuracy is not sought the most convenient measuring tools are the simple steel rule together with outside and inside calipers, Fig. 38. Straight-forward length measurements may be made directly from a rule as shown in Fig. 39, diameters being more easily handled with calipers.

**Fig. 38 Outside and Inside Calipers**

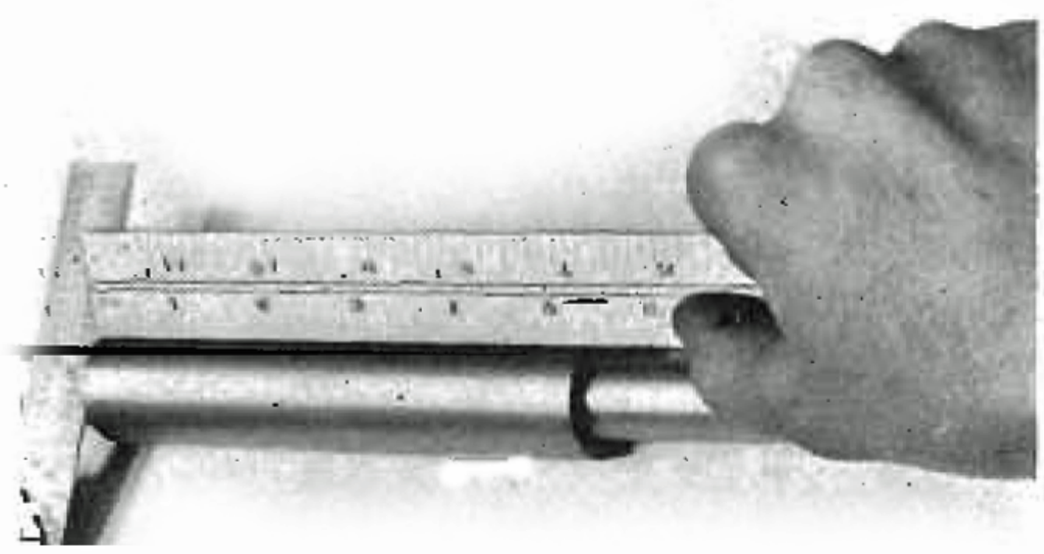

**Fig. 39 Measuring with Steel Rule**

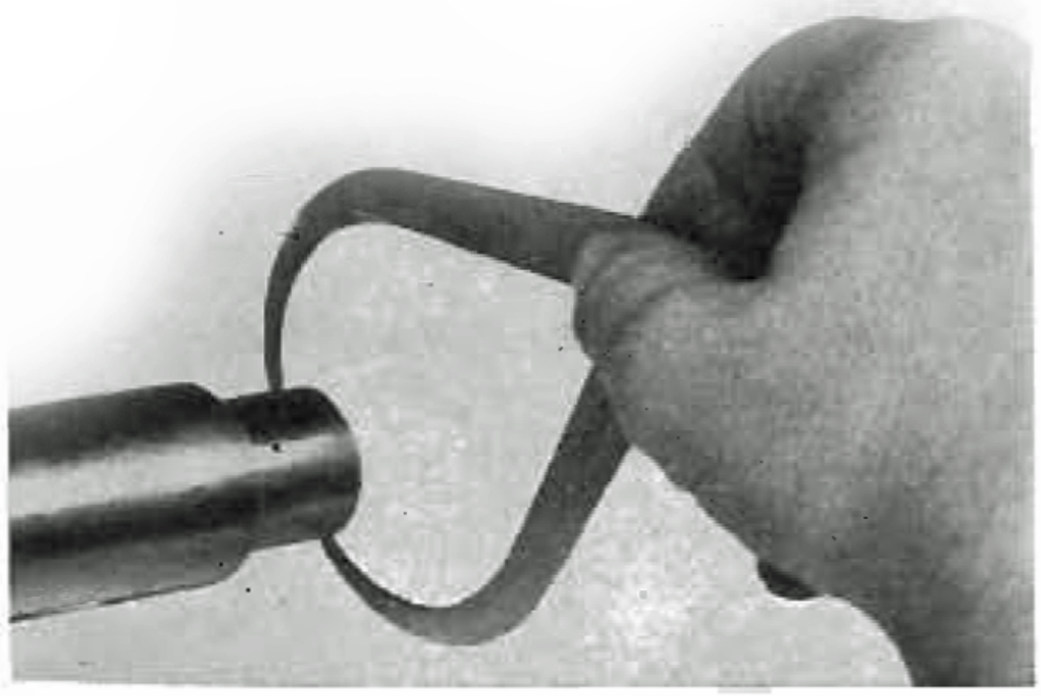

**Fig. 40 Application of Outside Caliper**

**Fig. 41 Application of Inside Caliper**

Fig. 40 shows the correct method of applying an outside caliper to measure the diameter of a shaft. Accurate measurement with calipers depends upon a sensitive touch; calipers should never be forced, as this will cause them to spring, resulting in inaccurate measurements. The setting of a pair of inside calipers to the diameter of a hole is carried out as per Fig. 41. The calipers should enter with a slight drag and care must be taken to see that they are held square across the diameter of the hole.

Figs. 42 and 43 show the most convenient methods of setting outside and inside calipers to a steel rule.

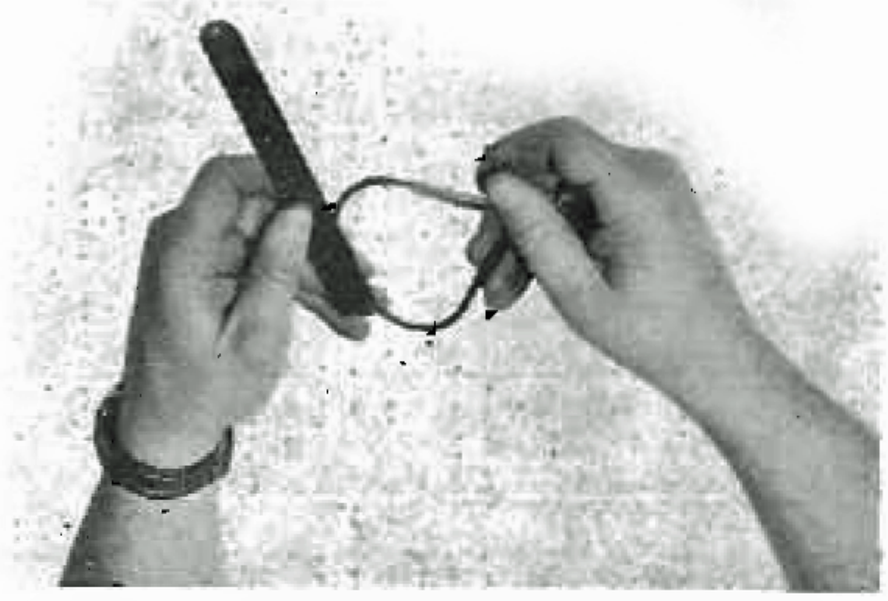

**Fig. 42 Setting Outside Caliper to a Steel Rule**

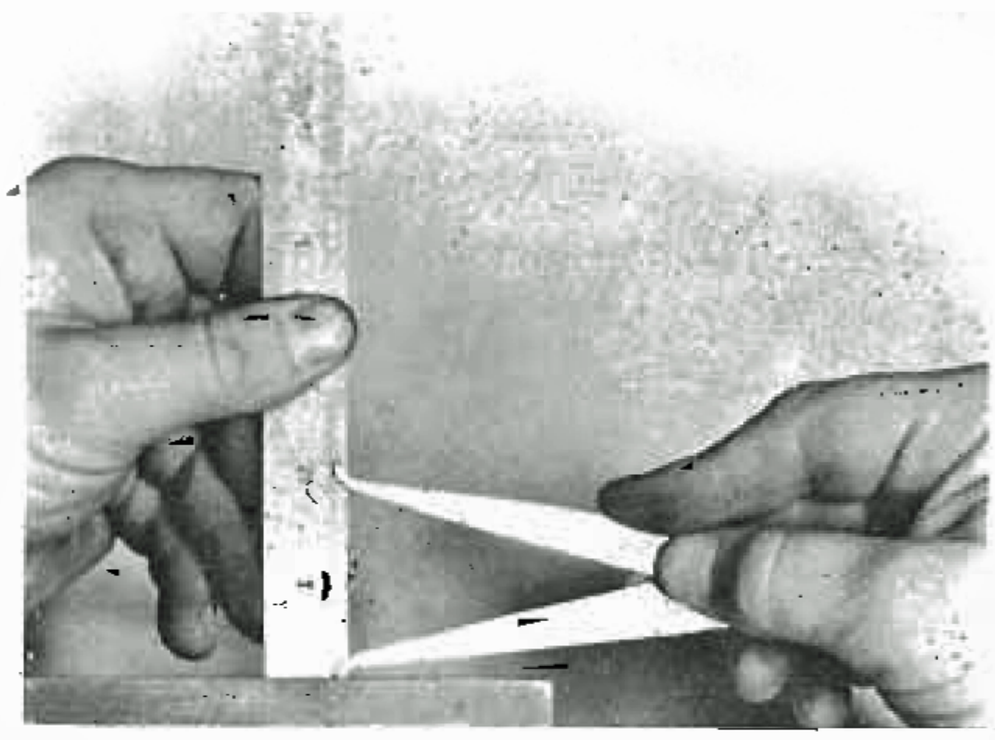

**Fig. 43 Setting Inside Caliper to a Steel Rule**

## Micrometers

Work which requires a degree of accuracy too fine to be readily measured with rule and calipers may be measured by means of outside or inside micrometers, Figs. 44 and 45. Outside micrometers, Fig. 44, are made in a range of sizes, 0-1, 1-2, 2-3, etc., each size having a working range of a little over one inch. Inside micrometers, Fig. 45, consist of a short micrometer body to which various length bars are fitted according to the size of hole which is to be measured.

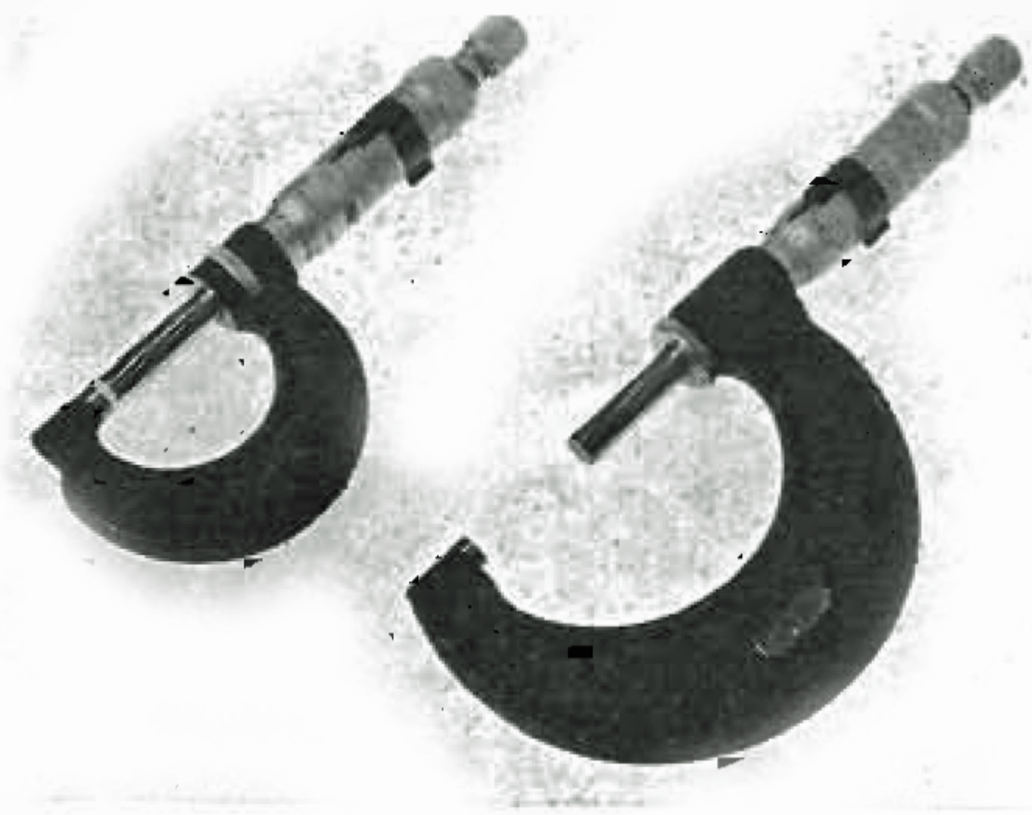

**Fig. 44 Outside Micrometers**

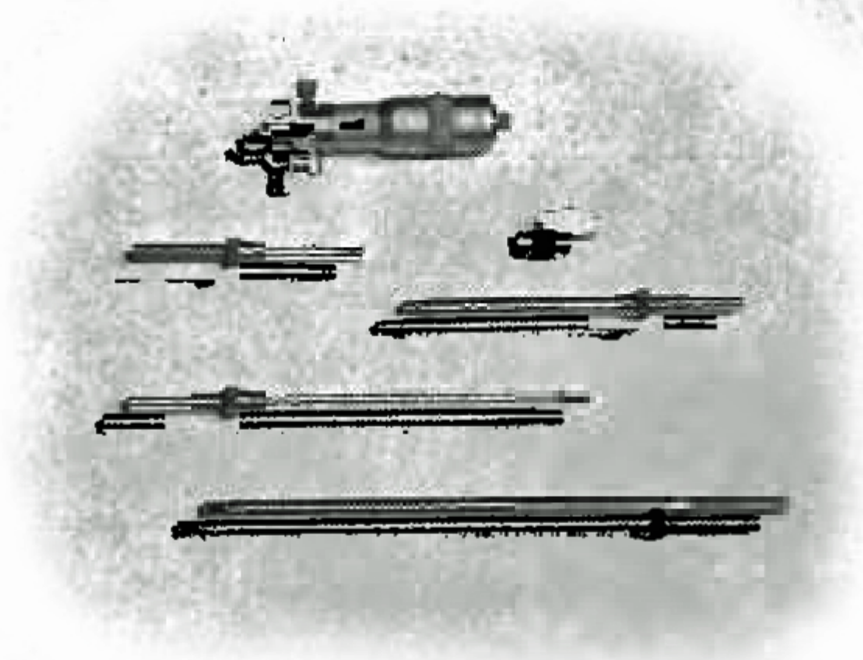

**Fig. 45 Inside Micrometer**

## Reading a Micrometer

A micrometer is a gauge operated by means of a screw. This screw, in micrometers adapted to English measurement, has 40 threads to the inch, and hence the micrometer spindle, "A" Fig. 46, advances by 1/40" or .025" in making one complete turn.

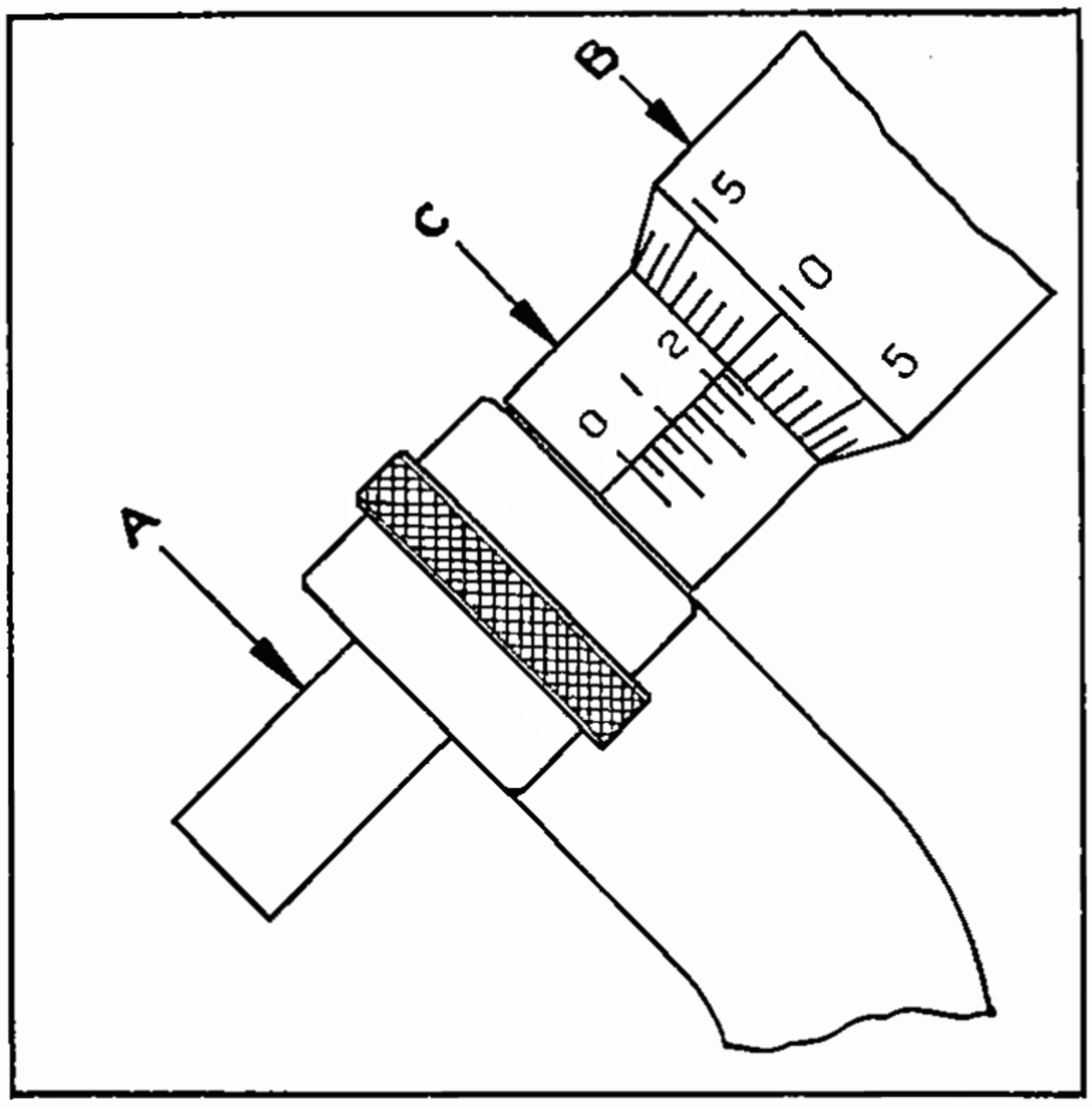


To the spindle is attached the thimble, "B", the lower edge of which is bevelled and is divided into 25 parts, each representing one thousandth of an inch forward movement of the spindle. On the inner sleeve "C" a line parallel to the axis is cut; this is known as the datum line and coincides with the zero mark on the thimble when the micrometer is closed; all measurements are calculated from this datum line.

**Fig. 46 Reading a Micrometer**

The sleeve "C" is graduated with a series of transverse lines each representing 1/40" or one complete revolution of the spindle, and hence the number of lines visible above the zero indicates the number of complete turns by which the micrometer is open. Every fourth line is marked 1,2,3,4, etc., and represents .1 of an inch.

The micrometer reading is the sum of the readings on the sleeve "C" and thimble "B". Supposing the thimble were screwed out so that the graduation "2" and one additional division were visible on the sleeve (see Fig. 46) and that graduation 10 coincided with the datum line. The reading is then 0.200 + .025 + .010 = .235 inch.

Accurate measurement with micrometers depends on a sensitive touch; forcing the spindle or screwing it suddenly against the part to be measured will result in inaccurate readings. Many micrometers embody a spring-loaded ratchet to minimise errors from this cause.

Micrometers should periodically be checked against master gauge blocks and any inaccuracies which may have developed be corrected.

## Vernier Calipers

Fig. 47 Vernier Caliper

The vernier caliper, Fig. 47, comprises a rule fitted with fixed and sliding jaws, the sliding jaw carrying a vernier scale enabling graduations of the rule to be subdivided with great accuracy. The principle of the vernier is illustrated in Fig. 48.

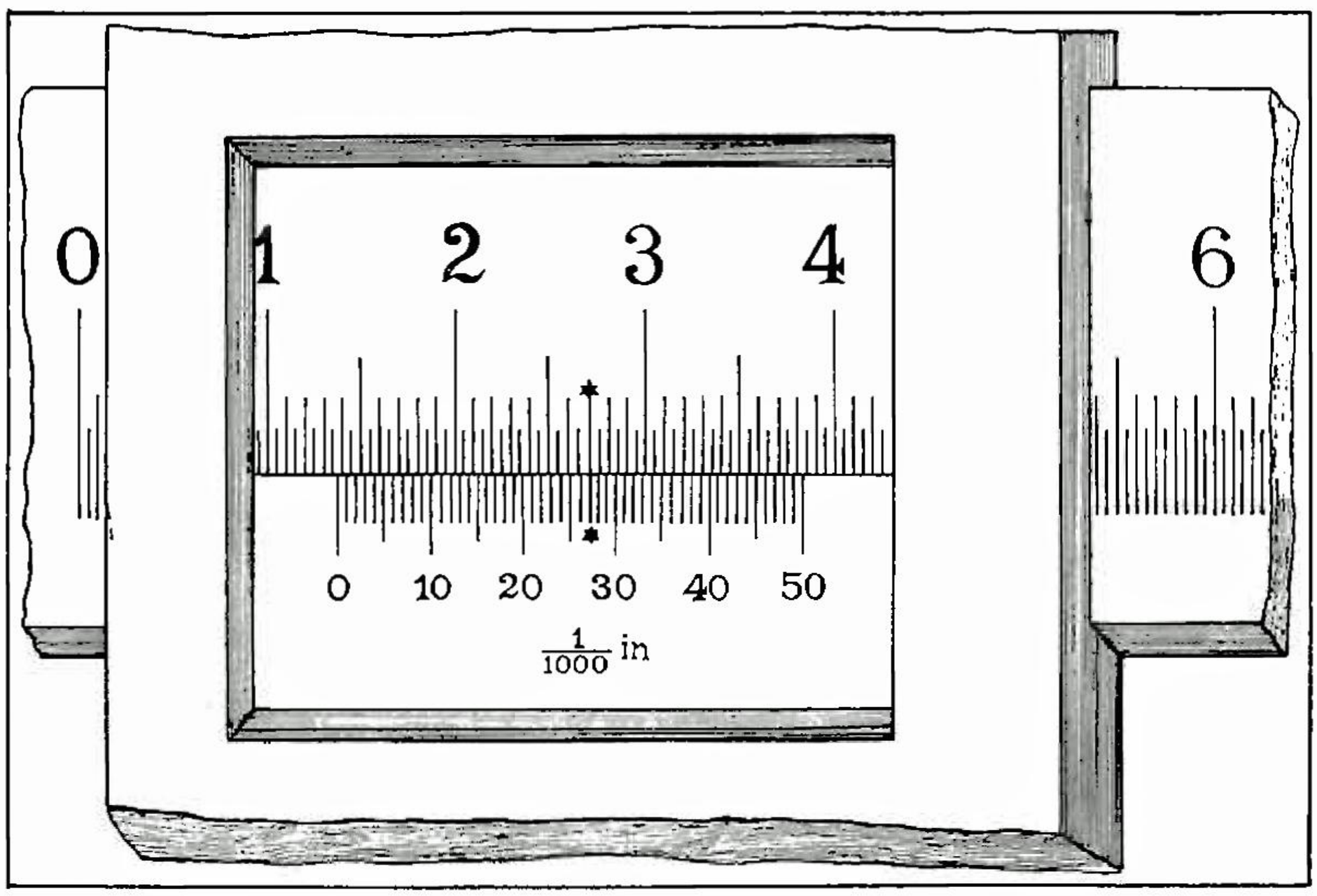


Fig. 48 Reading a Vernier

The scale on the rule is graduated in divisions of 1/20th (.050) inch, every second division representing 1/10th or .100 inch. The sliding jaw of the instrument carries the vernier scale, which is divided into 50 parts, the total length of these 50 divisions corresponding to 49 divisions of the rule or main scale, so that each division on the vernier is smaller than the divisions on the rule by 1/50 x 1/20 or .001 inch.

Thus, if the jaws of the vernier are set so that the zero mark on the vernier scale coincides with a division on the main scale, then the first division after zero on the vernier scale will fall short of its counterpart on the main scale by .001″, the second by .002″, the third by .003″, etc., the 50th division falling short by .050″, and so coinciding with the 49th division on the main scale. If the jaws are then opened by a further .001″ the first division, which previously diverged by .001″, will coincide; opening the instrument by .002″ will cause the second vernier division to coincide with its counterpart, etc. The number of the vernier division to coincide with its counterpart on the main scale indicates, therefore, the number of thousandths by which the instrument is open beyond

the last full mark on the main scale. The reading of the vernier caliper thus becomes the sum of the reading on the main scale to the last full division before the zero mark on the vernier scale, plus the number of the division on the vernier scale which corresponds with its counterpart on the main scale. In Fig. 48 the reading of the instrument is 1.350 + .027 = 1.377″.

The principle of the vernier is applied with advantage to many other instruments besides the vernier caliper. Added to the datum line on a micrometer, it enables this instrument to read to .0001″, while its addition to the datum line of a protractor enables angular measurements to be divided into minutes of arc.

## Plug and Snap Gauges

For standard size bores, or for repetition work on non-standard sizes, plug gauges, Fig. 49, are frequently used as a fast and reliable method of checking hole dimensions. These gauges are made with a "go" end conforming to the lower limit of tolerance and a "no-go" end conforming to the upper limit. Entry of the "go" end and non-entry of the "no-go" end indicates that the dimension of the hole is within the required limits. The "go" end is usually made with an annular ring close to the end, as illustrated, to facilitate starting in the hole. Snap gauges, Fig. 50, serve a similar purpose in checking outside diameters.

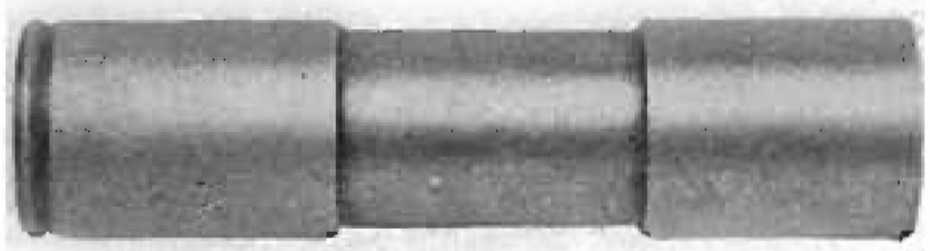

**Fig. 49 Plug Gauge**

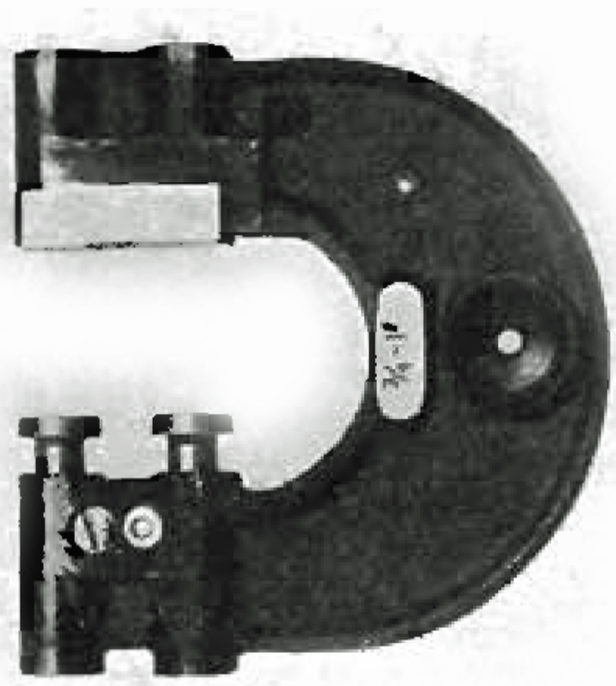

**Fig. 50 Snap Gauge**

CHAPTER FOUR

# TURNING BETWEEN CENTRES

The practice of turning between centres is the oldest method of lathe operation, and for a wide range of work is still the most effective means of holding the workpiece.

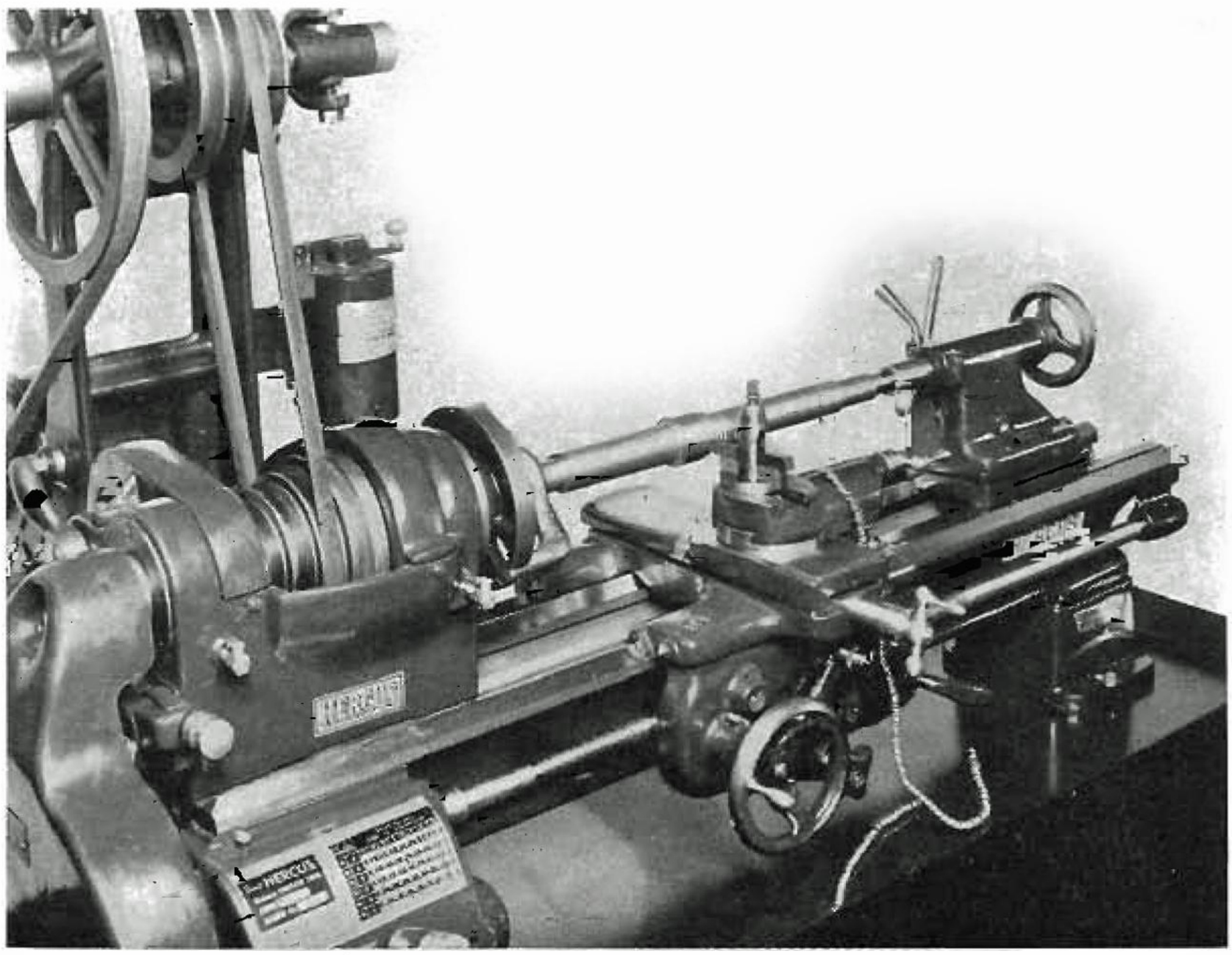


**Fig. 51 Turning a Shaft between centres**

In all cases where work is to be machined between centres it is necessary to prepare the ends of the workpiece to receive the centres by forming indentations to match them. There are many means by which the centres can be located and formed, and the method adopted will depend on the facilities available and the nature of the work itself.

## Drilling Centres with the Workpiece held in the Lathe Chuck

Where the stock to be centred is of a diameter small enough to pass through the headstock spindle it can be centred by using a three-jaw chuck, as per Fig. 52. This method may also be employed for shafts of a larger diameter and comparatively short length. Where the diameter of a shaft is too large to pass through the spindle and its length is too great to permit its being held by the chuck jaws alone its outer end may be supported by a fixed steady rest, as per Fig. 53. In all cases the end of the shaft should be faced off square before drilling the centre holes.

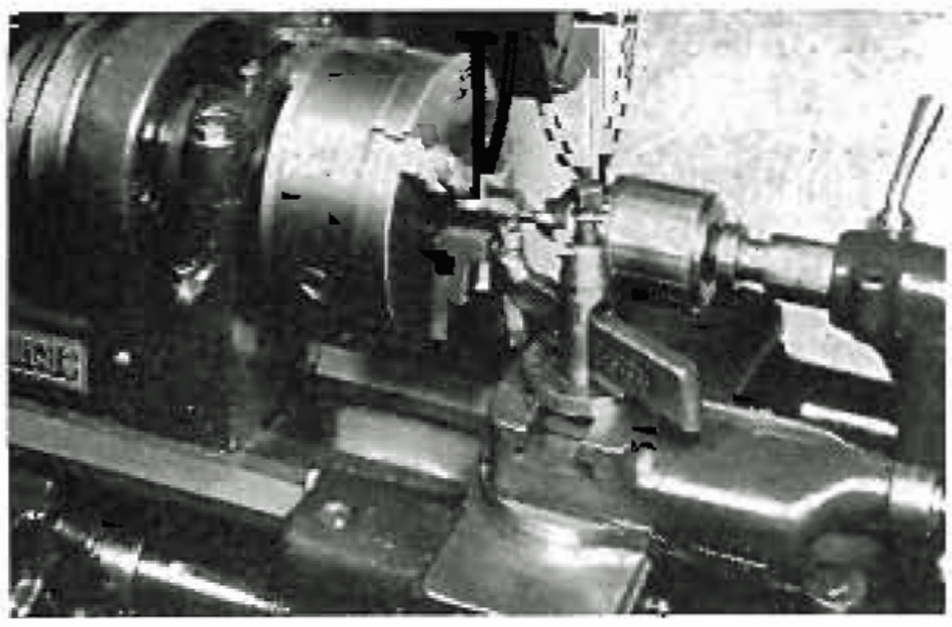

Fig. 52 Centring a Bar held in the Chuck

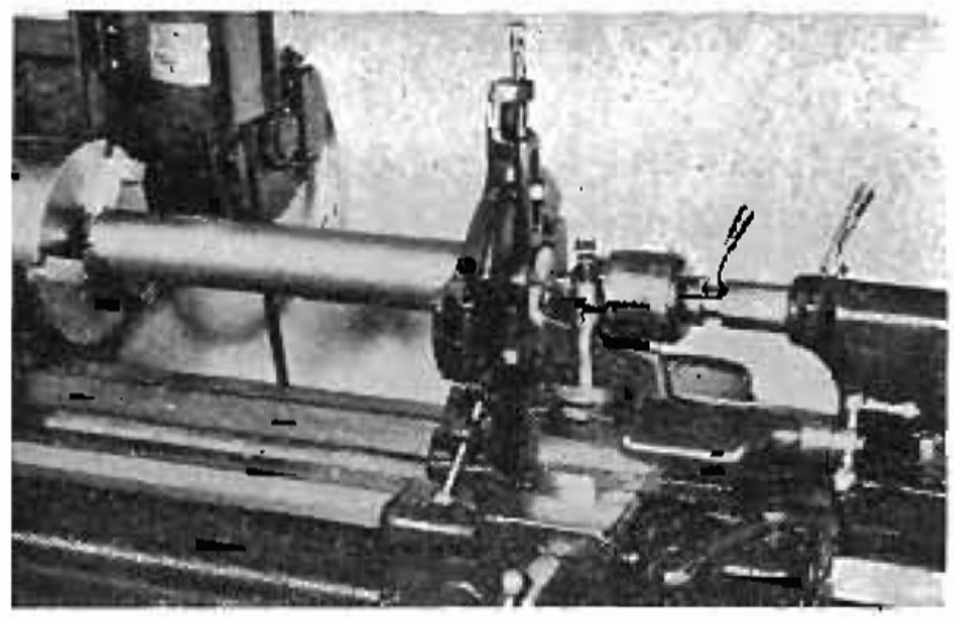

Fig. 53 Centring a Bar held in Chuck and Steady

## Locating Centres

When the nature of the job is such as will not permit the adoption of either of these methods the work-piece may be centred under a drill press or by means of a portable drill. The locations of the centre holes must first be marked out and centre punched; Figs. 54 and 55 show the two usual methods of location.

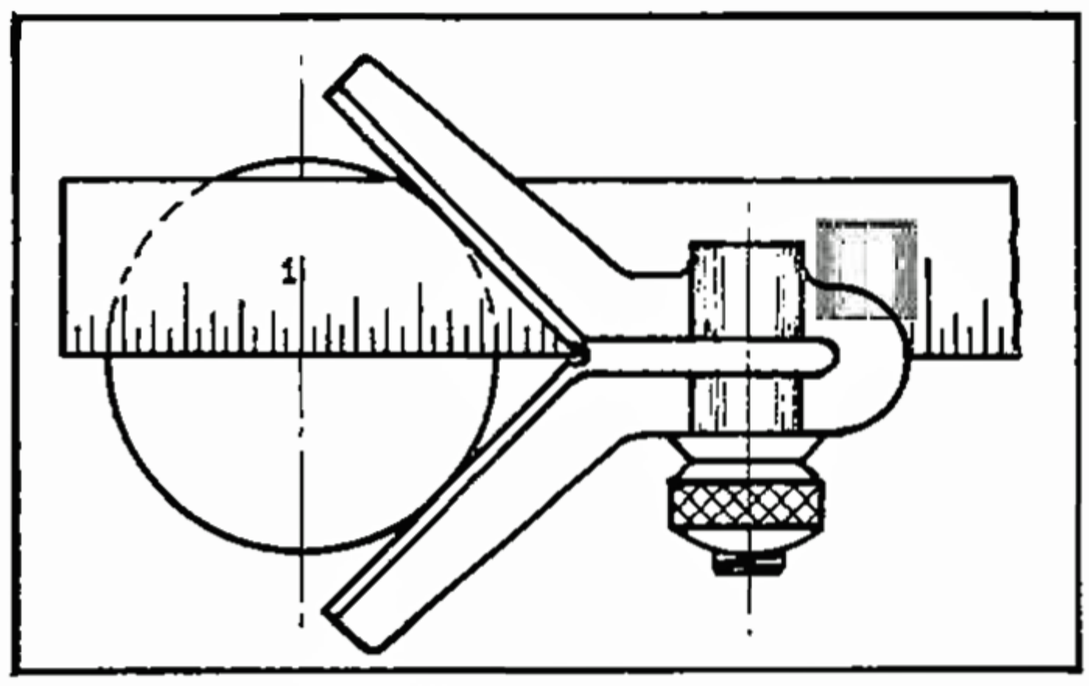

Fig. 54 Locating Centres with Centre Square

## Drilling Centre Holes

The combination countersink centre drill, Fig. 56, is the most suitable tool for producing centre holes. Centre drills are available in a range of sizes and these, together with recommended centre sizes, are listed in Table 6.

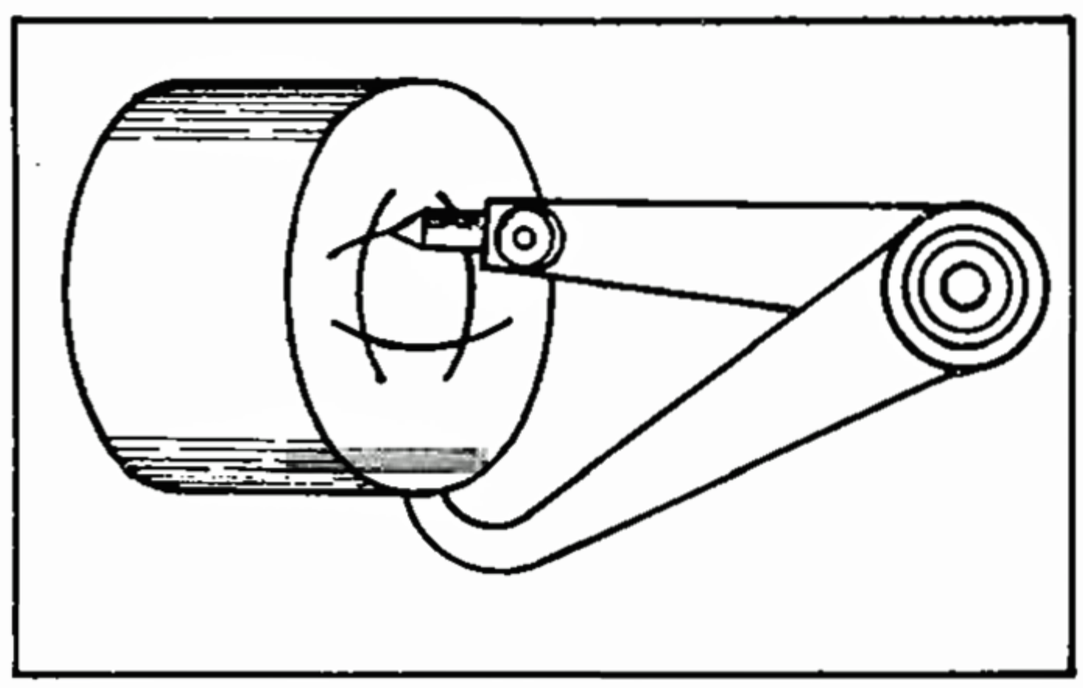

Fig. 55 Locating Centres with Hermaphrodite Caliper

## Table 6 Centre Drill Sizes

| No. | C | C | F | F | P | W |
|---|---|---|---|---|---|---|
| 1 | 3/32 | 3/32 | 1/8 | 1/8 | 3/64 | 5/16 |
| 2 | 1/8 | 1/8 | 3/16 | 3/16 | 1/16 | 7/16 |
| 3 | 3/16 | 3/16 | 1/4 | 1/4 | 3/32 | 11/16 |
| 4 | 1/4 | 1/4 | 5/16 | 5/16 | 1/8 | 15/16 |
| 5 | 3/8 | 3/8 | 7/16 | 7/16 | 3/16 | 1 3/16 |
| 6 | 9/16 | 9/16 | 5/8 | 5/8 | 1/4 | 1 15/16 |
| 7 | 11/16 | 11/16 | 3/4 | 3/4 | 5/16 | |

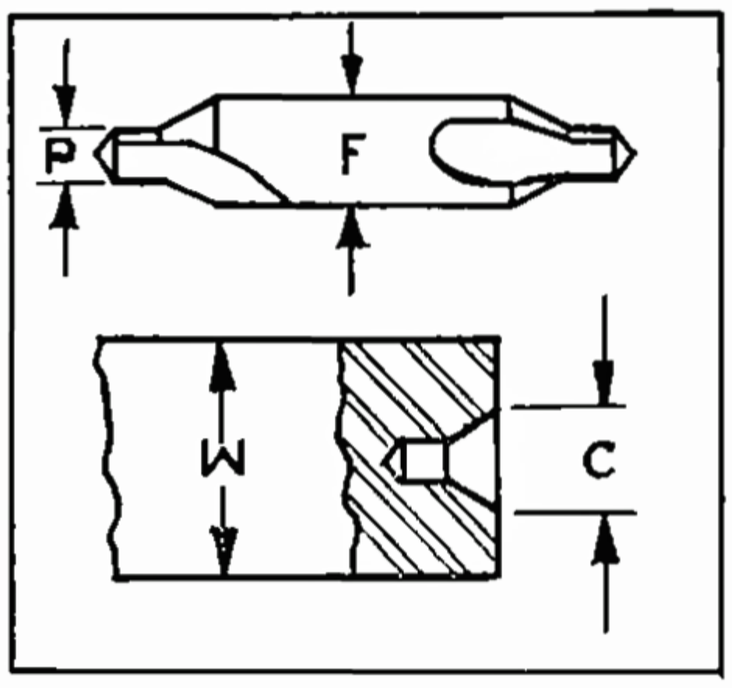


Fig. 56 Combination Countersink Centre Drill

## Inserting and Removing Centres

When mounting centres in the headstock and tailstock of a lathe, care should be taken to ensure that the centres, centre sleeve, and tapered spindle bores are

thoroughly clean and free from any marks or burrs which could cause the centre to run out of true. **It is extremely dangerous to insert a finger in a Revolving Spindle.** The headstock centre may be removed by giving it a sharp tap through the spindle with a machine-faced rod, approximately ¾" dia. The tailstock centre is automatically ejected when the tailstock barrel is withdrawn to its fullest extent.

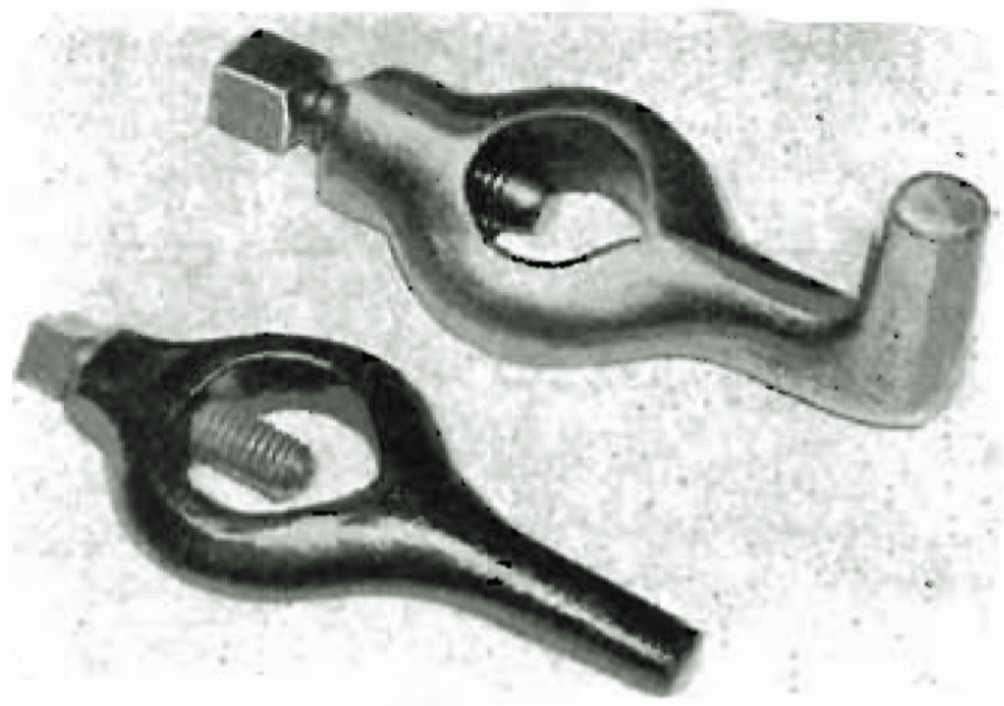

## Mounting Work Between Centres

Fig. 57 shows the two types of lathe carrier most commonly used for driving work between centres. The bent carrier is driven by a slot in the faceplate, while the straight carrier is driven by a stud.

**Fig. 57 Lathe Carriers**

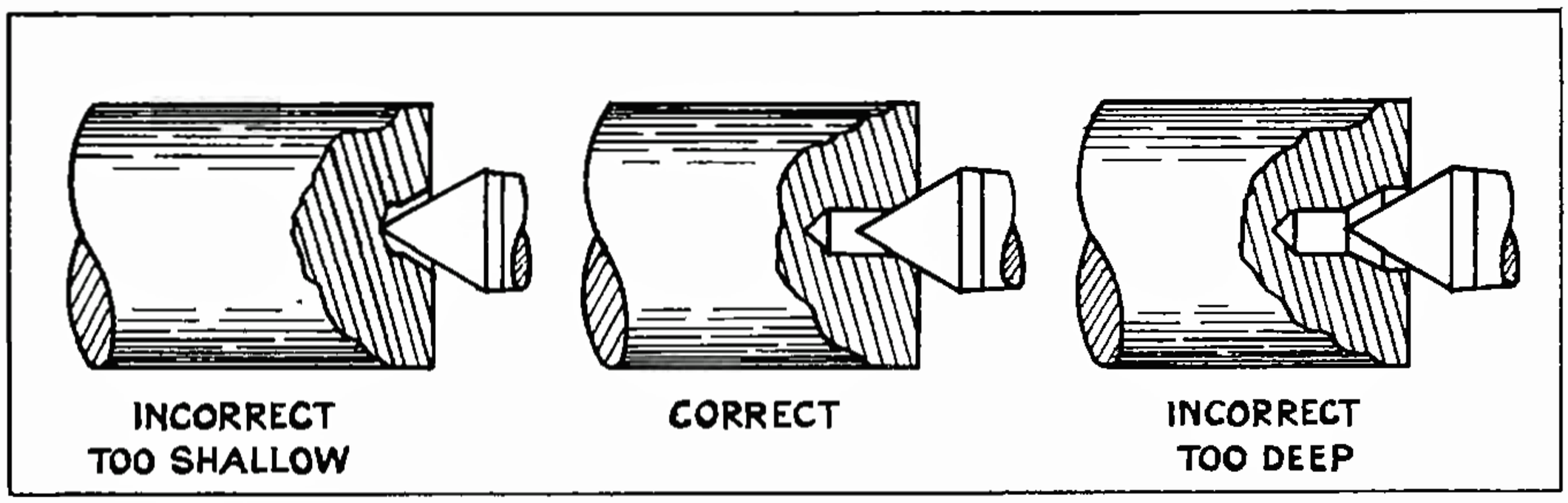


**Fig. 58—Correct and Incorrect Centre Holes**

It is essential that the centre hole should fit the centre correctly, and Fig. 58 shows the effects of incorrect centre holes. A lubricant of some kind should be applied to the tailstock centre, a mixture of red lead and oil or white lead and tallow being excellent for this purpose.

## Running-in Centres

The position of the centres in the workpiece may sometimes shift slightly during early turning operations due to uneven wear on a newly drilled centre hole. To overcome this it is advisable to begin by taking roughing cuts from each end of the job, thus "running in" both centres, before finishing any part of it to its final dimensions.

The adjustment of the tailstock centre should be checked periodically and corrected to allow for the expansion of the workpiece with the heat generated in machining.

## Live and Dead Centres

A centre is described as live or dead according to whether it rotates with the work or remains stationary. On lathe work the headstock centre is normally live and the tailstock centre dead. A live centre is better able to withstand heavy

pressures than a dead centre due to absence of friction between centre and the workpiece. It is advisable, therefore, to feed the tool towards the headstock wherever possible in order that the cutting pressure may be taken by the "live" headstock centre.

For heavy work, especially where high speeds are involved, a live tailstock centre is sometimes employed. This consists of a centre having the cone point mounted on ball or roller bearings to allow it to rotate with the work, Fig. 59. Live centres are invaluable for hard roughing out, but tend to lose some of their accuracy after long usage, and are not always advisable for finishing operations on precision work.

Fig. 59 Live Centre

For high speed applications, where live centres are considered doubtful, tungsten carbide type centres are frequently employed, having much greater resistance to wear and heat than ordinary tool steel centres.

## Holding Hollow Shafts between Centres

Workpieces such as hollow spindles or tubes may be machined in the lathe on pipe centres, Fig. 60. The ends of the tube must first be faced off square and a short 60° chamfer machined in each end of the hole to receive the centre cone.

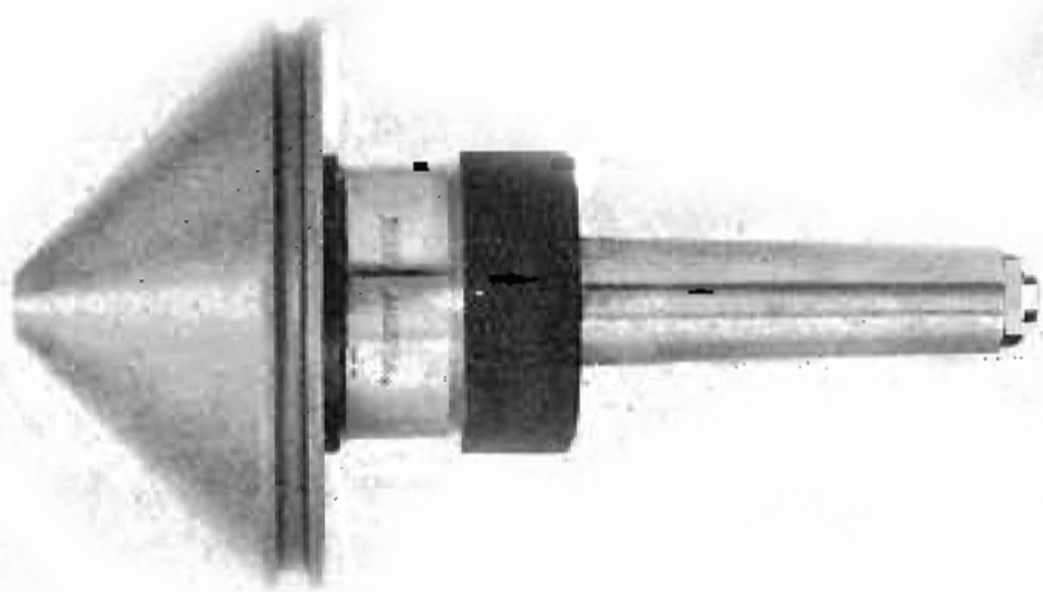

Fig. 60 Pipe Centre

To avoid the friction which would result from the large contact area of these centres it is preferable that a live type centre be used at the tailstock end. Pipe centres are not generally considered suitable for extremely precise work, and where close tolerances of concentricity are called for other methods must be used.

One such method is to mount the work on an accurate mandrel. Alternatively, false plugs may be fitted tightly into each end, allowing the job to be machined between centres in the normal way. When plugs are driven tightly into a component having comparatively thin walls, the ends will be sprung outwards slightly. If this component is then machined on the outside to its finished dimensions and the plugs removed the ends will spring back to their original inside diameter, leaving the outside diameter undersize. To minimise this effect, plugs for thin walled workpieces should be made hollow, as shown in Fig. 61, so that,

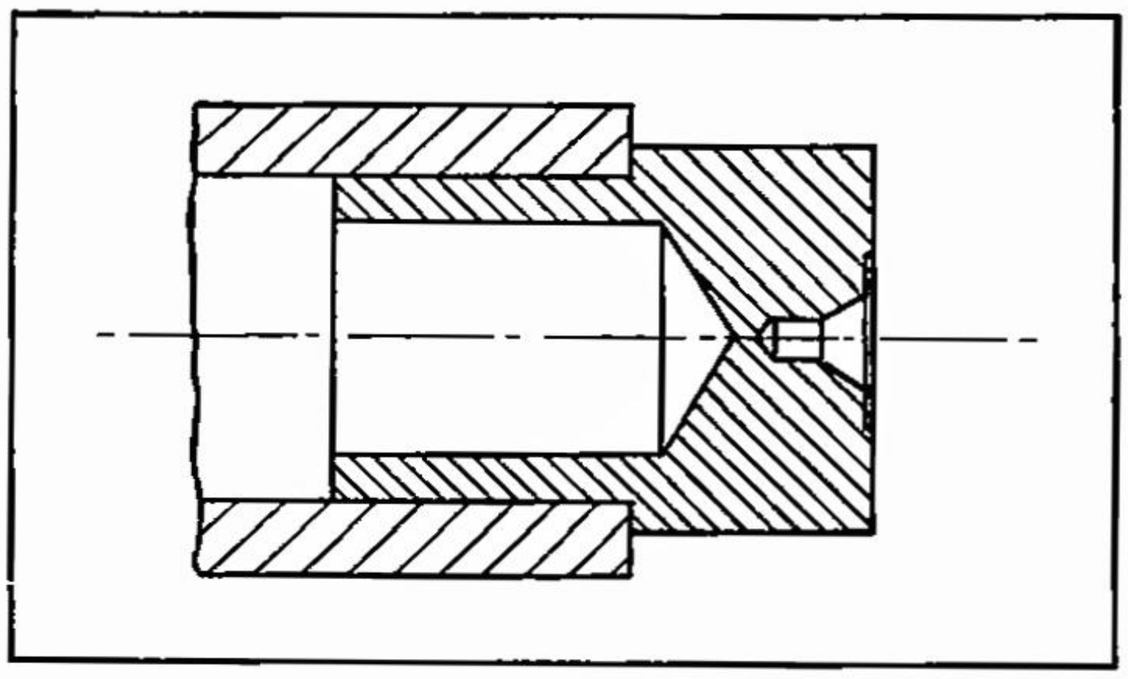

Fig. 61 Centred Plug fitted to Hollow Workpiece

when driven in, the plug will collapse rather than the work expand. The wall thickness of the plug should not be more than one half of the finished wall thickness of the workpiece. Alternatively, the workpiece may be made longer at each end by the length of the plug and these ends removed after all other operations have been completed.

## Turning on Lathe Mandrels

Many components which are not in themselves suited to turning between centres may be finish turned by this method provided they have a central hole bored to size to enable them to be mounted on a mandrel. This is frequently the most convenient way of finish machining the second side of gear blanks, pulleys and similar items after they have first been turned and bored from one side in a chuck. Fig. 62 shows a cast iron gear blank which has been faced, bored and partially turned on the outside in a chuck; Fig. 63 shows the same gear blank mounted on a lathe mandrel ready for machining on the second side.

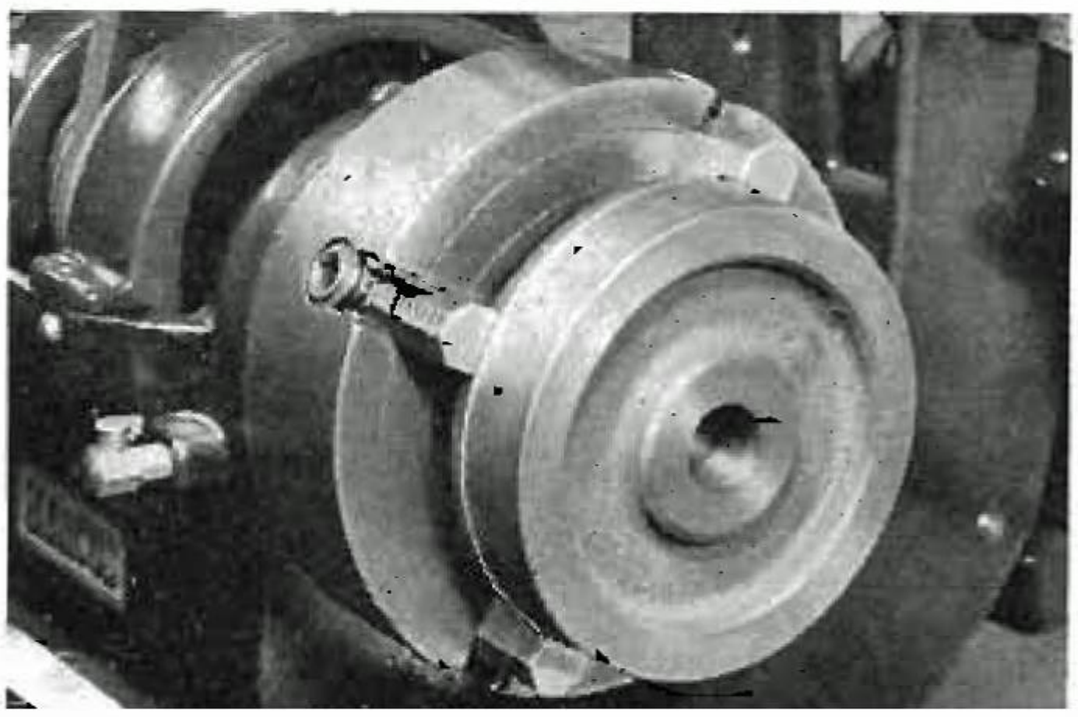

Fig. 62 Gear Blank held in Lathe Chuck after completion of First Operation

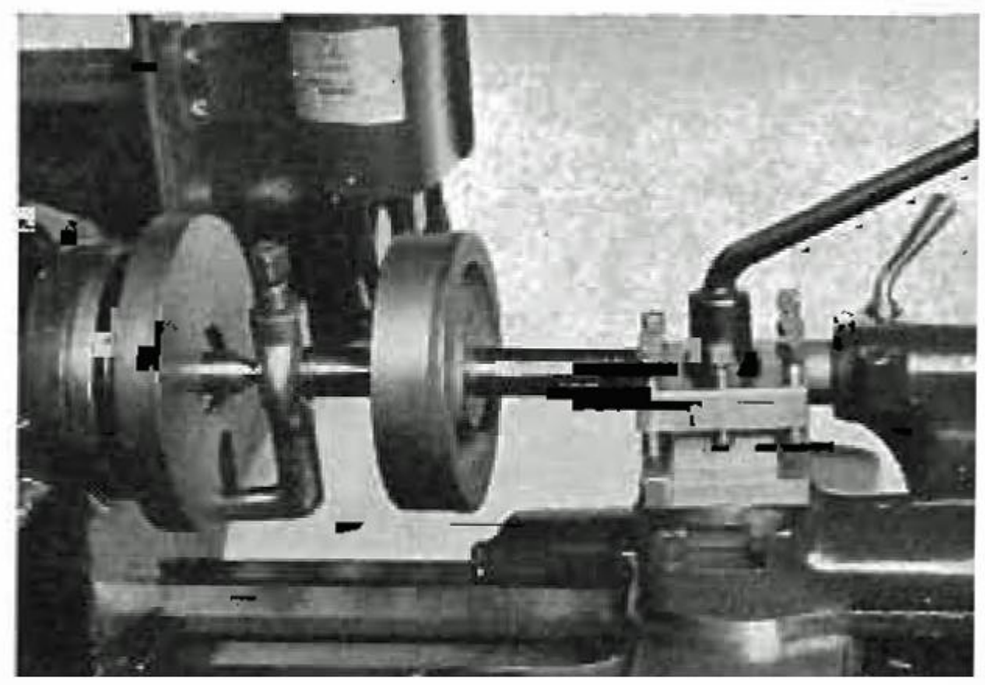

Fig. 63 Same Gear Blank mounted on Mandrel for Final Operation

A lathe mandrel, Fig. 64, consists of a hardened steel bar centred at each end and ground slightly tapered on the outside to enable it to be pressed into the bore of the work piece to give a driving fit. Before inserting a mandrel, its surface should be lightly oiled to prevent damage to the bore and to facilitate removal.

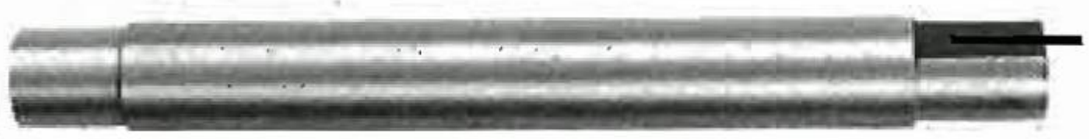

Fig. 64 A Lathe Mandrel

Lathe mandrels are available in all standard sizes, the amount of taper normally provided being approximately .006" per foot, with the correct nominal size approximately one-third the distance from the small end. For jobs involving non-standard diameters, soft mandrels are frequently used, being turned to the required diameter and taper to secure a driving fit in the work. Standard dimensions for lathe mandrels are given in tables at the end of this book.

CHAPTER FIVE

# CHUCK AND FACEPLATE WORK

Fig. 65 Turning a Spindle Housing in a Chuck

A great deal of lathe work is of a nature which does not lend itself readily to the "between centres" method of mounting and which is more conveniently machined by attaching it to the headstock spindle by means of either a chuck or a faceplate.

The types of chucks in most common use are the four-jaw independent, Fig. 66; the three-jaw self-centring, Fig. 69; and the collet chuck, Figs. 76 and 79.

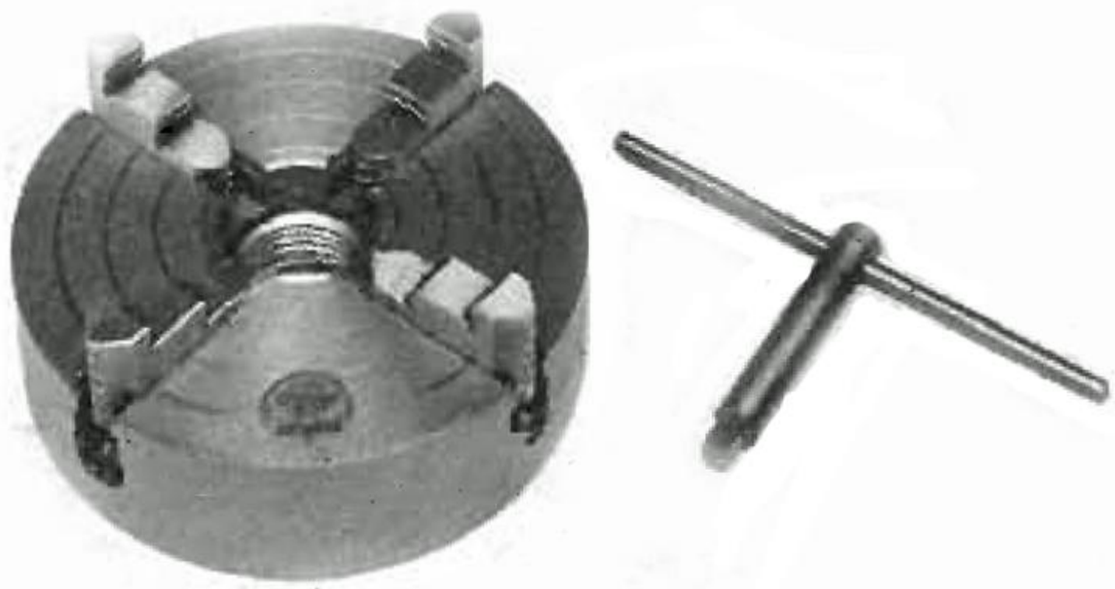

Fig. 66 Four Jaw Independent Chuck

## Independent Chuck

The independent chuck has four stepped reversible jaws, each of which is adjusted independently of the others. This is the most universal of all lathe chucks and can be used to hold pieces of practically any shape in either an eccentric or concentric position, while by reason of the independent adjustment of the jaws it is possible to achieve almost any degree of accuracy in the correct setting of the workpiece.

A series of concentric rings are usually scribed on the face of the chuck, and these enable round or square work to be trued approximately as it is inserted. If the lathe is then run for a moment under power or pulled round for a few turns by hand any large degree of eccentricity or "out of truth" can be readily discerned by the eye and corrected by suitable adjustment of the appropriate jaws.

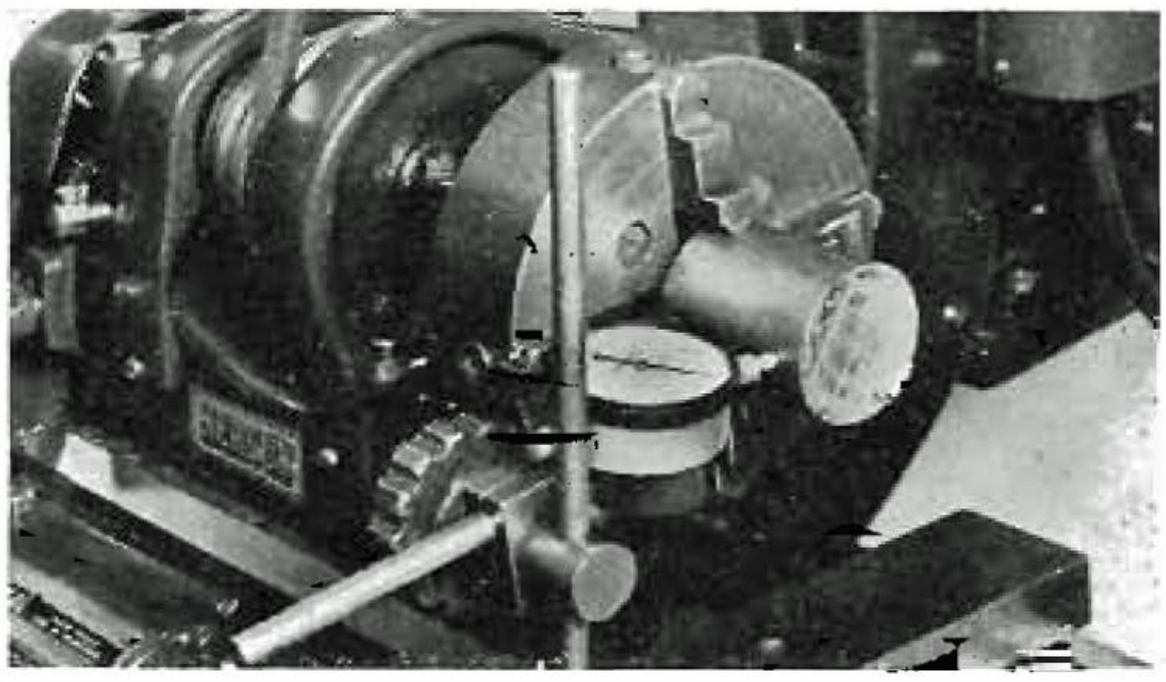

Fig. 67 Trueing Work with a Dial Indicator

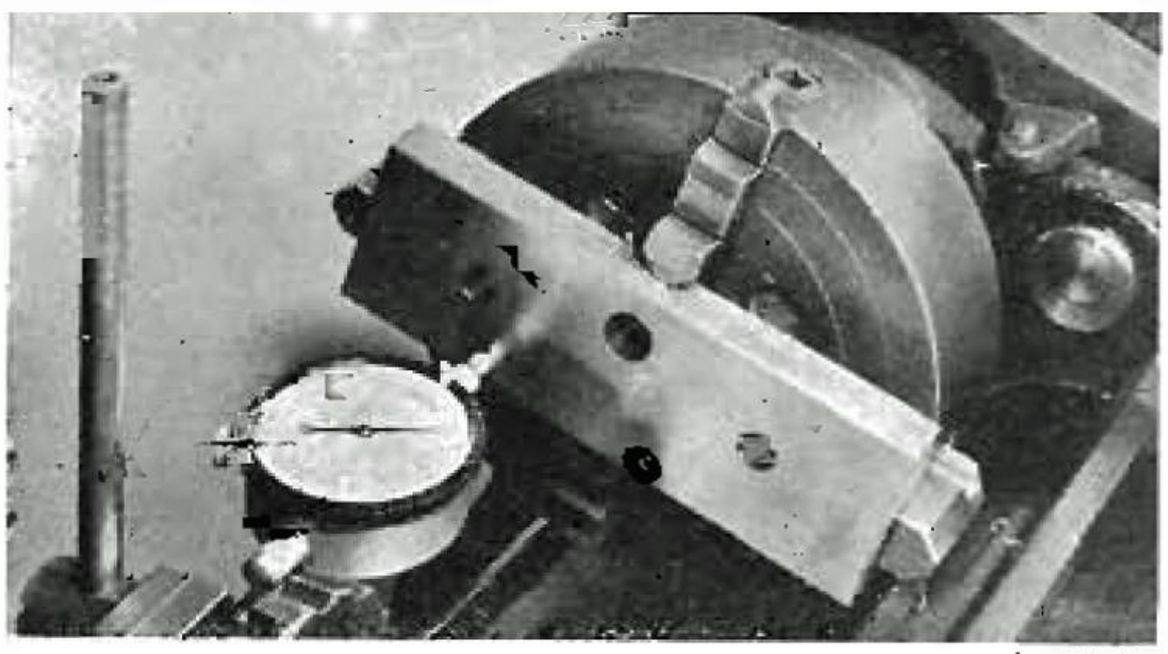

Fig. 68 Testing the Face of Work for Wobble

Where a greater degree of accuracy is required the concentricity may be checked by means of a dial indicator reading in thousandths of an inch, as per Figs. 67 and 68. If a dial indicator is not available the work may be trued with a high degree of accuracy by means of the graduated collar of the cross slide. In this method a piece of soft steel or other material is clamped in the toolpost, the cross-slide advanced by hand until it lightly touches the work and the reading of the graduations noted. The cross-slide is then withdrawn, the spindle rotated 180°, and the process repeated. The difference between these two readings will equal twice the amount of eccentricity of the workpiece.

## Self-Centring Chuck

The self-centring chuck, Fig. 69, has three jaws which are moved in or out in unison, thus centring round or hexagonal workpieces automatically with a reasonable degree of accuracy. As a general rule a self centring chuck in good condition will centre work within .003", which, for a great deal of work is sufficient. Where a greater degree of accuracy is required either a collet or independent chuck must be used.

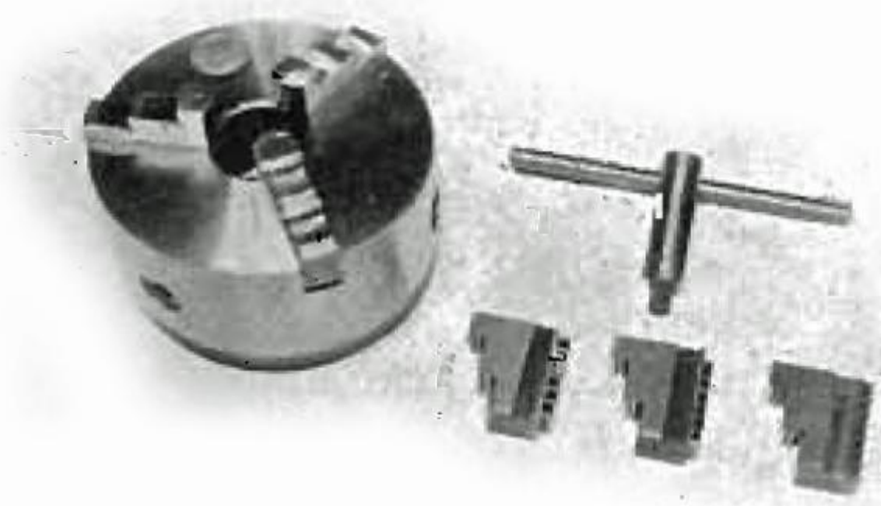

Fig. 69 Three Jaw Self Centring Chuck

Unlike the independent chuck, the jaws of a self-centring chuck are not reversible and a second set of jaws are therefore provided with this type of chuck for use in the reversed position. The jaws of self-centring chucks and the slots which receive them are all numbered and jaws should always be inserted in their correct sequence and positions. The mechanism of a self-centring chuck is shown in Fig. 70. When inserting the jaws the scroll must be rotated until the outside start of the thread is just ready to pass the No. 1 jaw slot; No. 1 jaw is then slid in as far as it will go, the scroll is rotated to engage No. 1 jaw and moved on until the start of the thread appears at No. 2 slot, where the process is repeated and the scroll moved on to No. 3 slot.

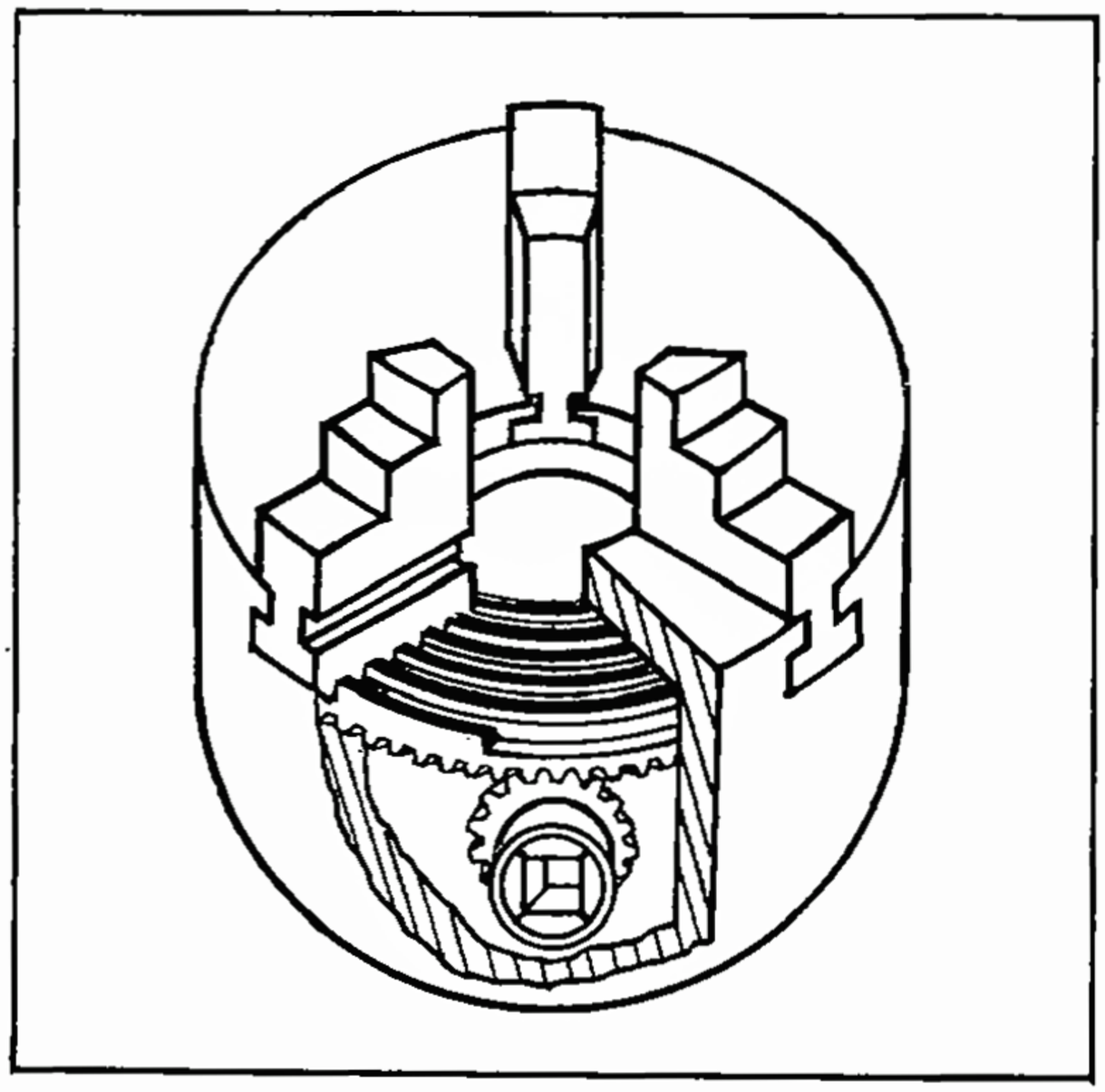

**Fig. 70 Mechanism of Self Centring Chuck**

## Mounting and Removing Chucks

The threads on the spindle nose and in the back-plate of the chuck should be cleaned of all dirt or chips and lightly oiled before chucks or faceplates are mounted on the lathe spindle. The shoulder of the spindle against which the chuck backplate registers must also be clean and free from burrs, as any irregularity at this point will prevent the chuck from running true. The lathe should not be run under power while screwing the chuck on to the spindle, nor should the chuck be brought up to the shoulder suddenly, as this may strain the threads and make removal difficult.

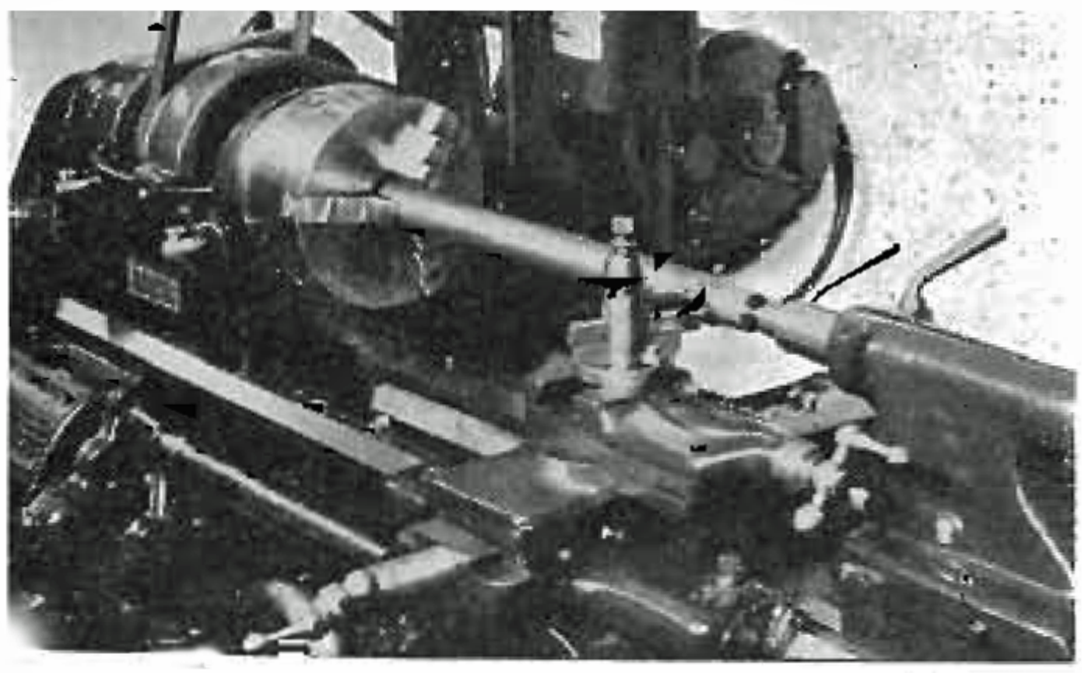

**Fig. 71 Turning a Shaft held between Chuck and Centre**

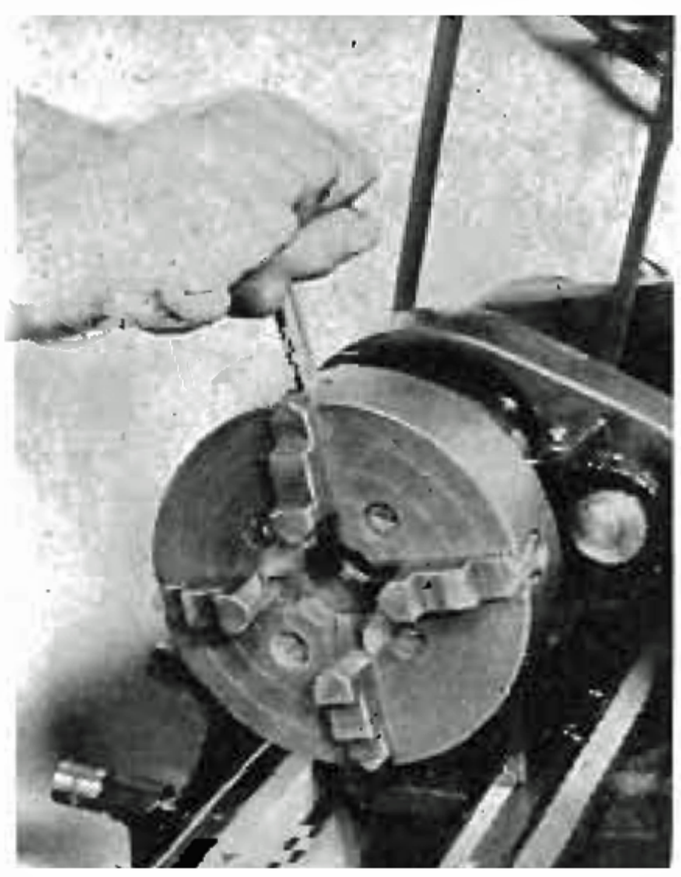

**Fig. 72 Removing a Chuck**

To remove the chuck the spindle should first be locked by engaging the back gears while leaving the bull gear lock pin still engaged. The chuck is then loosened by pulling forward on the chuck key, as per Fig. 72; if the chuck is too tight for removal by this method, the jaws (not the key) may be tapped with a piece of wood or a rawhide hammer.

## Size of Chuck

For general work, the sizes of chucks recommended for use on the Hercus 9" Swing Lathe are a 5" three-jaw self-centring and a light pattern 6" four-jaw independent.

## Fitting a Backplate to a Chuck

**Fig. 73 Chuck Back Plates**

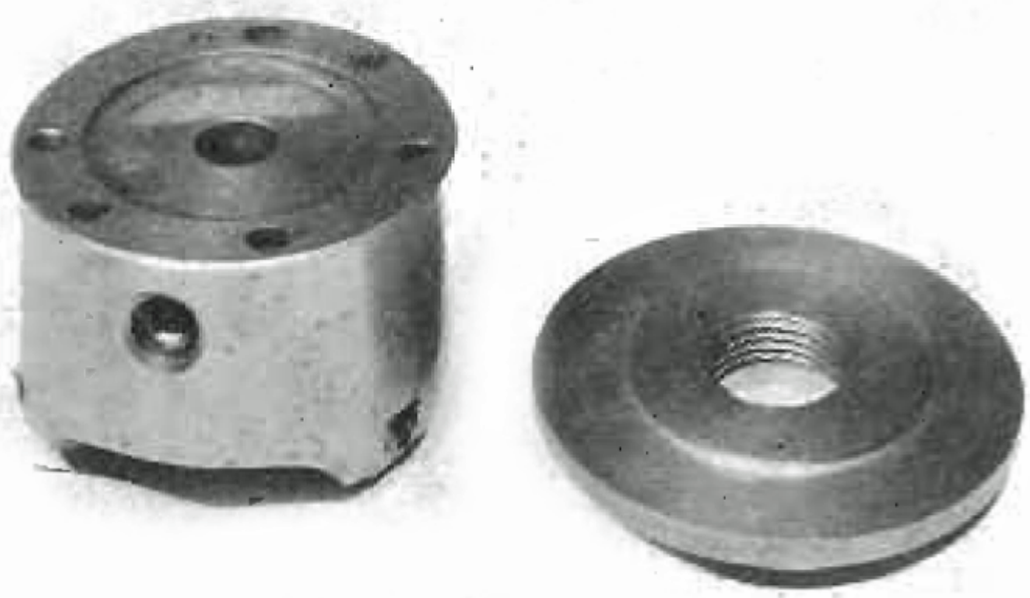

**Fig. 74 Rear View of Chuck showing Register and finish machined Backplate**

**Fig. 75 Chuck with Backplate attached**

Chucks are usually supplied with a plain recessed back face to which a backplate must be fitted to adapt them to the spindle nose of the lathe on which they are to be used. Suitable backplates, Fig. 73, rough machined and accurately screwed to fit the lathe nose can be purchased through the supplier of the lathe.

After ensuring that both backplate and spindle nose are clean and free from burrs the plate is screwed on the spindle and a roughing cut of approximately .030" taken over the face followed by one or more finishing cuts of approximately .002". A step is then turned on the face of the backplate to suit the register in the back of the chuck, Fig. 74. This step may be gauged approximately with calipers, but should be finished to a snug fit by trying the chuck in place. The face of the backplate is then chalked all over, inserted in the register of the chuck and tapped lightly so that the edges of the screw holes in the chuck will mark the positions for the holes in the backplate. These holes should be drilled 1/16" larger than the diameter of the set screws to be used. This will remove any possibility of the screws binding against the sides of the holes should the spacing be slightly incorrect.

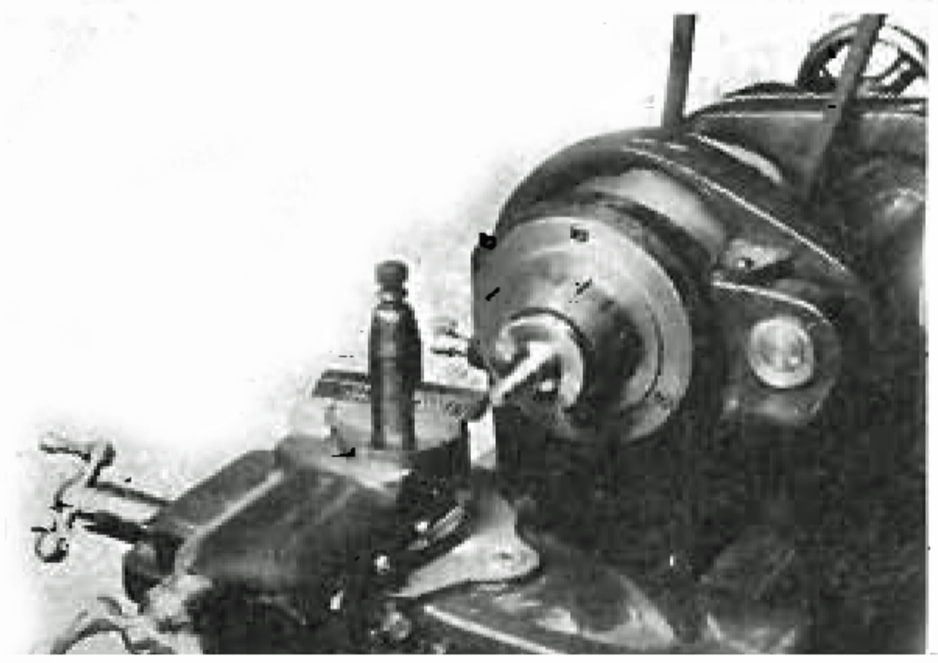

Fig. 76 Turning a Component held in a Draw-in Collet Chuck

Fig. 77 Draw-in Collet Attachment

## The Draw-in Collet Chuck

The draw-in collet chuck, Fig. 76, is one of the most accurate of all chucks and is widely used on both production and tool work where extreme accuracy is required.

The parts which make up the collet attachment are illustrated in Fig. 77. These consist of a hollow draw-in tube which extends through the headstock spindle, a tapered closing sleeve or "nose adaptor" which fits the No. 3 morse taper of the spindle nose and a screwed nose protection ring. The collets are released or tightened by releasing or screwing up the handwheel at the end of the draw-in tube. The nose protection ring serves to protect the spindle threads and also to withdraw the "nose adaptor" from the lathe spindle.

Fig. 78 Standard and Special Collets

Collets, Fig. 78, are available in all sizes from $\frac{1}{16}''$ to $\frac{1}{2}''$, advancing by 64ths. Special sizes, metric sizes as well as square or hexagonal collets, are also available. Square collets are available in sizes $\frac{5}{32}''$ to $\frac{11}{32}''$, square; hexagon in sizes $\frac{5}{32}''$ to $\frac{7}{16}''$, across the flats.

## The Direct Mounting Collet Chuck

Several excellent types of direct mounting collet chucks are available, one of which is illustrated in Fig. 79. These chucks can usually be supplied for either key or lever operation and can be fitted with an adaptor enabling them to be mounted directly to the lathe spindle nose. Collets for this type of chuck are adjustable through approximately $\frac{1}{8}''$, so that a wide range of bar sizes may be handled with a relatively small number of collets. The principal advantage of the direct

Fig. 79 Direct Mounting Collet Chuck

mounting collet chuck lies in the absence of the draw-tube, enabling material up to the full diameter of headstock spindle bore to be accommodated.

## The Faceplate

Many types of lathe work which cannot readily be accommodated between centres or in a chuck are clamped to the faceplate, Fig. 80, for machining. Faceplate work covers the turning and boring of many large and irregularly shaped pieces, while a great deal of production work is also handled by means of special jigs and fixtures mounted on lathe faceplates.

**Fig. 80**
**Lathe Faceplate**

**Fig. 81**
**Angle Bracket**

Many components are suitable for clamping directly to the faceplate, as per Fig. 82, while others are more readily handled by use of an angle bracket, Fig. 81, which is clamped to the faceplate, as per Fig. 83. When heavy workpieces are mounted off centre they should be balanced by means of counter weights bolted to the opposite side of the faceplate, as is illustrated in Figs. 82 and 83.

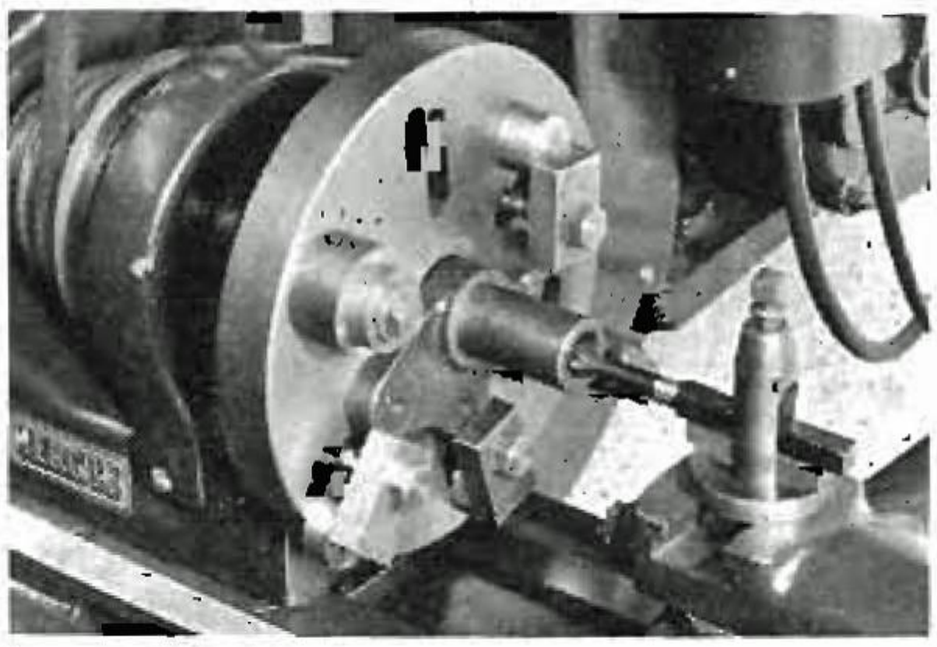

**Fig. 82 Machining a Component clamped to the Lathe Faceplate**

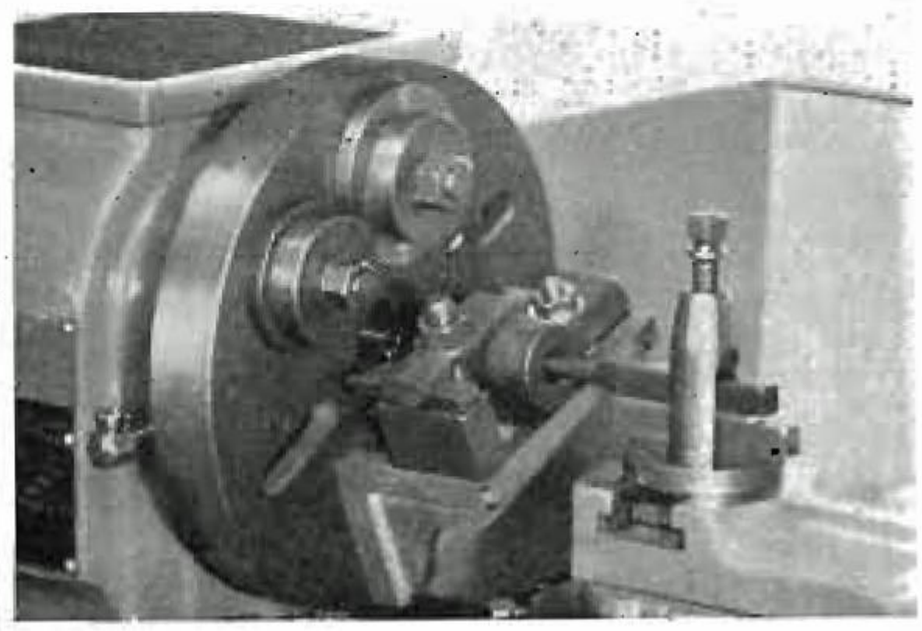

**Fig. 83 Machining a Bearing Housing mounted on an Angle Bracket attached to the Lathe Faceplate**

## Clamping Pressures

Components of a thin or frail nature, such as rings, plates, discs or light castings, are often distorted to some extent by the pressure which must be used to hold them in the chuck, or against the faceplate during rough machining operations. If such workpieces were finished while subjected to these stresses they would revert to their natural shape once the holding strains were released and their accuracy would be lost. To avoid this, it is advisable after rough machining items of this nature to release all clamps or chuck jaws and re-clamp lightly using just sufficient pressure to hold against a light finishing cut.

CHAPTER SIX

# DRILLING AND REAMING

Drilling in the lathe may be handled in two ways, either the work may be revolved with the drill held stationary in the tailstock, Fig. 84, or, alternatively, the drill may be revolved in the headstock while the work is held stationary against the tailstock, Fig. 85. Where practicable the first method is to be preferred, as it produces a straighter and truer hole.

## Drilling with Drill held in the Tailstock

When this method is used care must be taken to check the tendency for the point of the drill to wander as it commences to enter the work, resulting in a hole that is out of true and not square with the face. One method of starting a drill point true is to support the side of the drill with the butt end of a lathe tool as it enters the work; alternatively, a combination countersink centre drill, Fig. 56, page 29 may be used to give a true start to the hole. When drilling a cored hole in a casting the drill has a tendency to follow the cored hole and thus be thrown off centre. Chamfering the end of the cored hole, as per Fig. 86, will assist in keeping this tendency to a minimum.

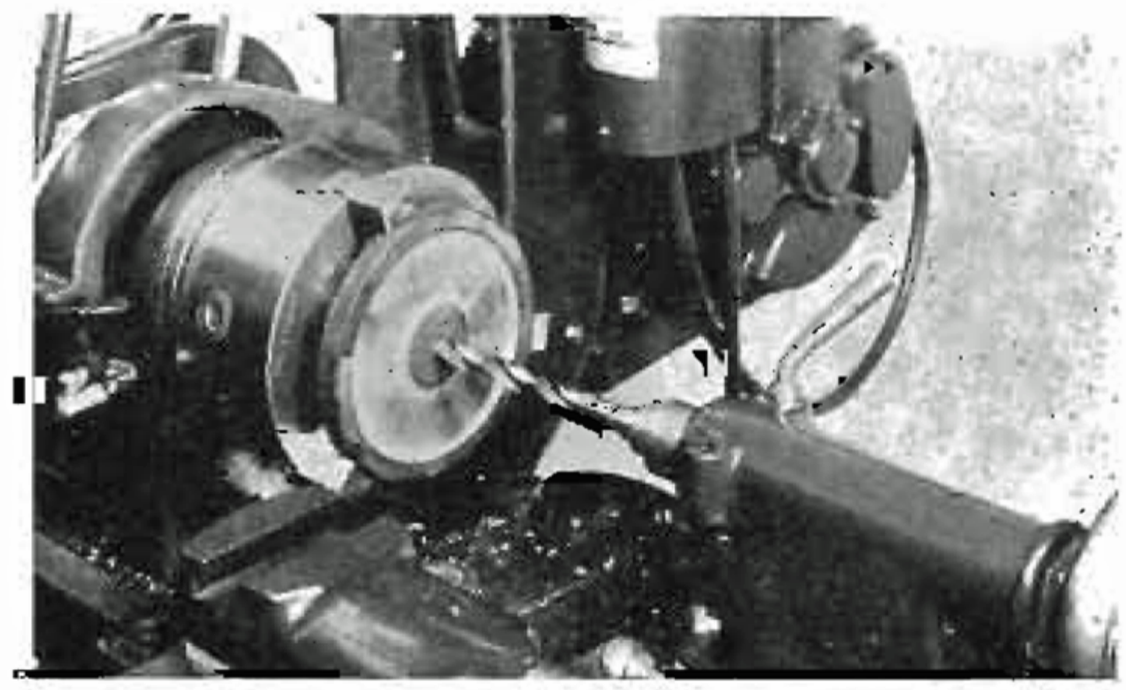

Fig. 84 Drilling in the Lathe, Drill Stationary

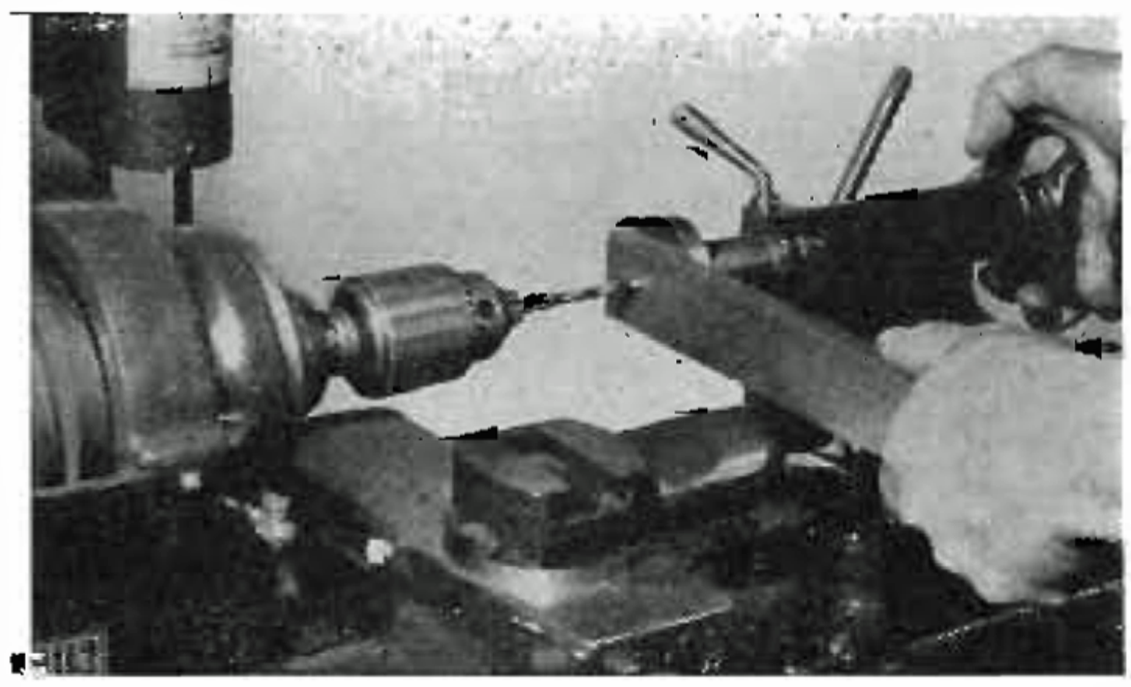

Fig. 85 Drilling in the Lathe, Work Stationary

## Holding the Drill

Drills of small diameter having straight shanks may be held by means of a drill chuck, Fig. 87, which fits the tapered bore of the tailstock barrel. Larger diameter drills having tapered shanks are mounted direct in the tailstock barrel. The tendency for a drill to slip in the tailstock during heavy drilling operations may be checked by means of a lathe carrier, as per Fig. 88.

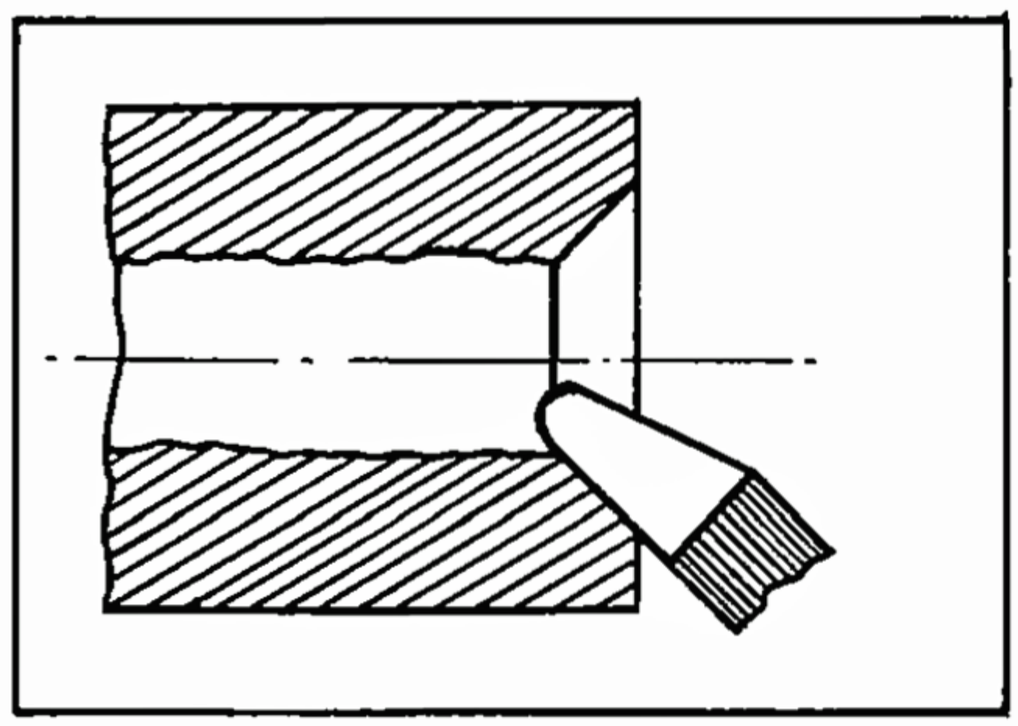

Fig. 86 Chamfering a cored Hole before Drilling

When holes of a comparatively large diameter ($\frac{5}{8}$" and over) are to be drilled considerable time and strain on the machine may be saved by first drilling a hole of a smaller diameter and opening this out with the larger drill.

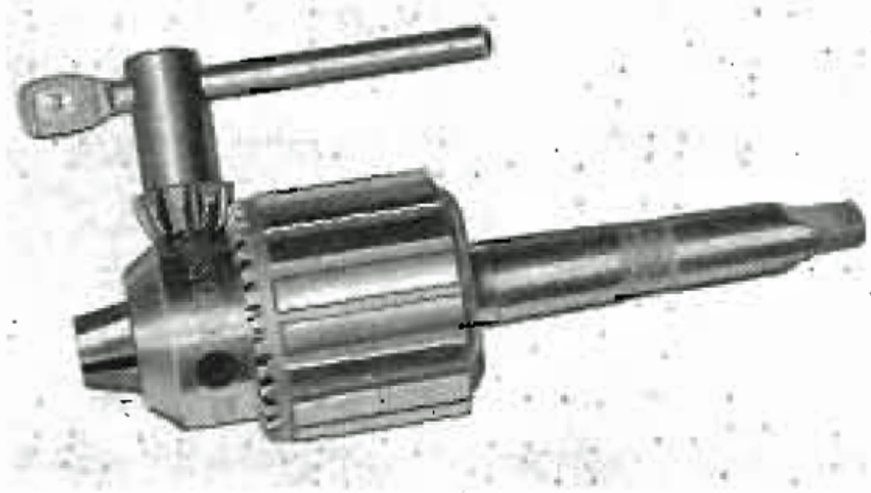

Fig. 87 Drill Chuck

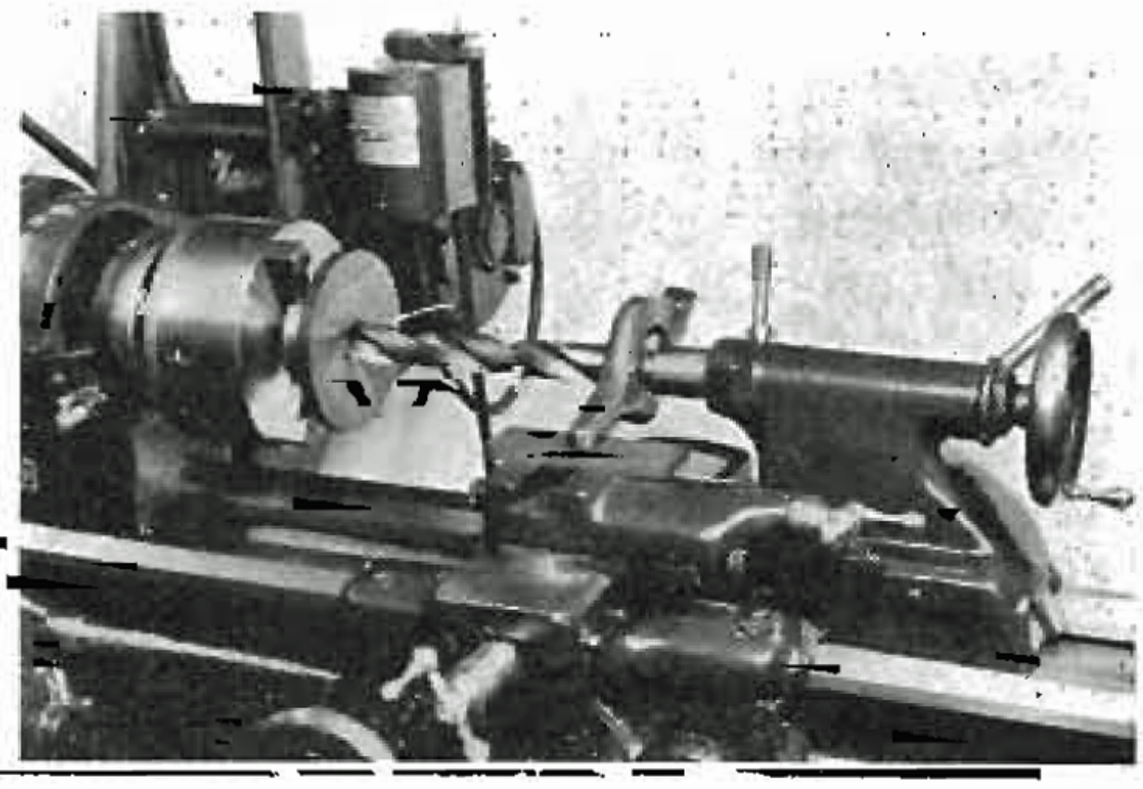

Fig. 88 Use of Carrier to take Strain while Drilling

## Drilling with Drill held in the Headstock

When it is necessary to drill holes with the drill held in the headstock spindle the tailstock centre is replaced by the drill pad, "A", Fig. 89, which supports the work being drilled, as per Fig. 85. The crotch centre, "B", Fig. 89, serves the same purpose, but by virtue of the V-cut across it is extremely convenient for drilling cross holes through round pieces such as shafts or bushes, as per Fig. 90.

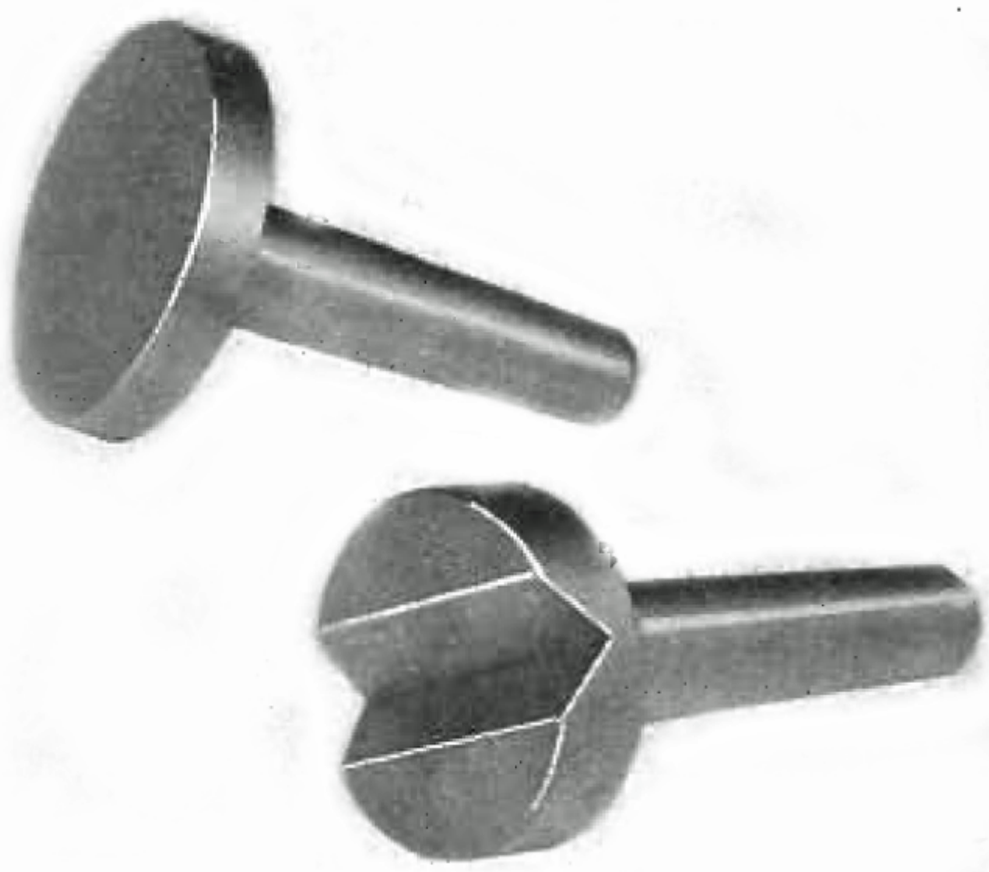

Fig. 89 Drill Pad "A" and Crotch Centre "B"

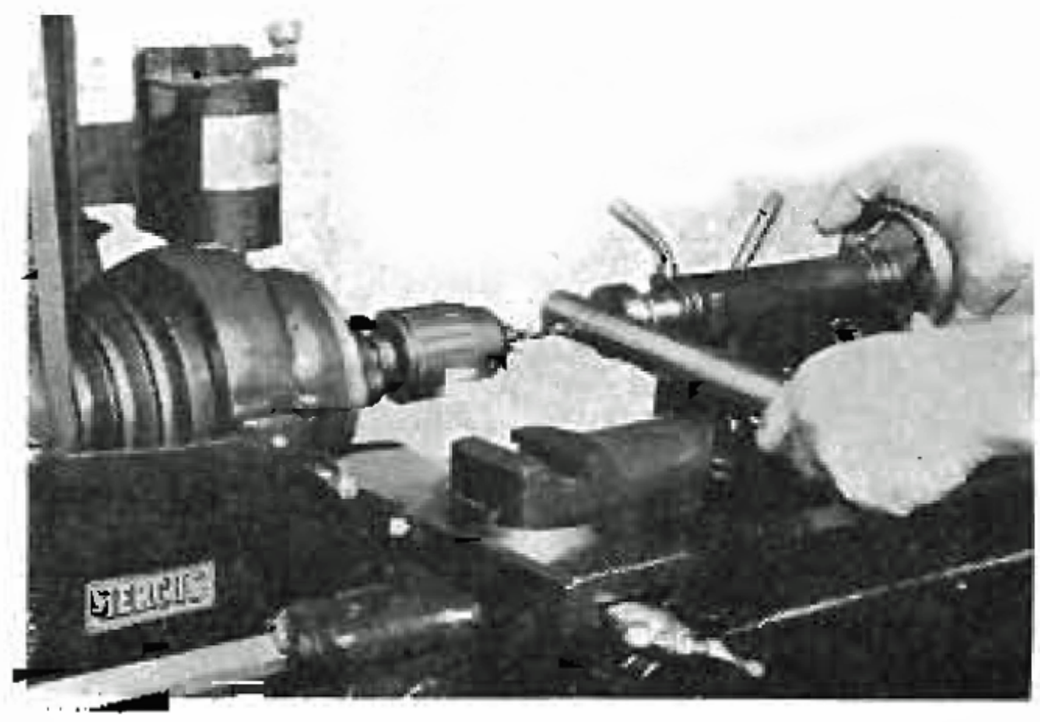

Fig. 90 Drilling a cross hole in a Shaft supported by the Crotch Centre

## Sharpening the Drill

Basically a twist drill cuts metal in the same way as any other lathe tool, and hence the cutting edges or "lips" must have the correct rake and clearance angles. The rake angle of the cutting edges is fixed by the angle at which the spiral flutes of the drill are inclined, Fig. 91, and this angle is usually made so as to be suitable for most general drilling work. The clearance angle, or lip clearance, is obtained by grinding away the "heel", or portion of the drill

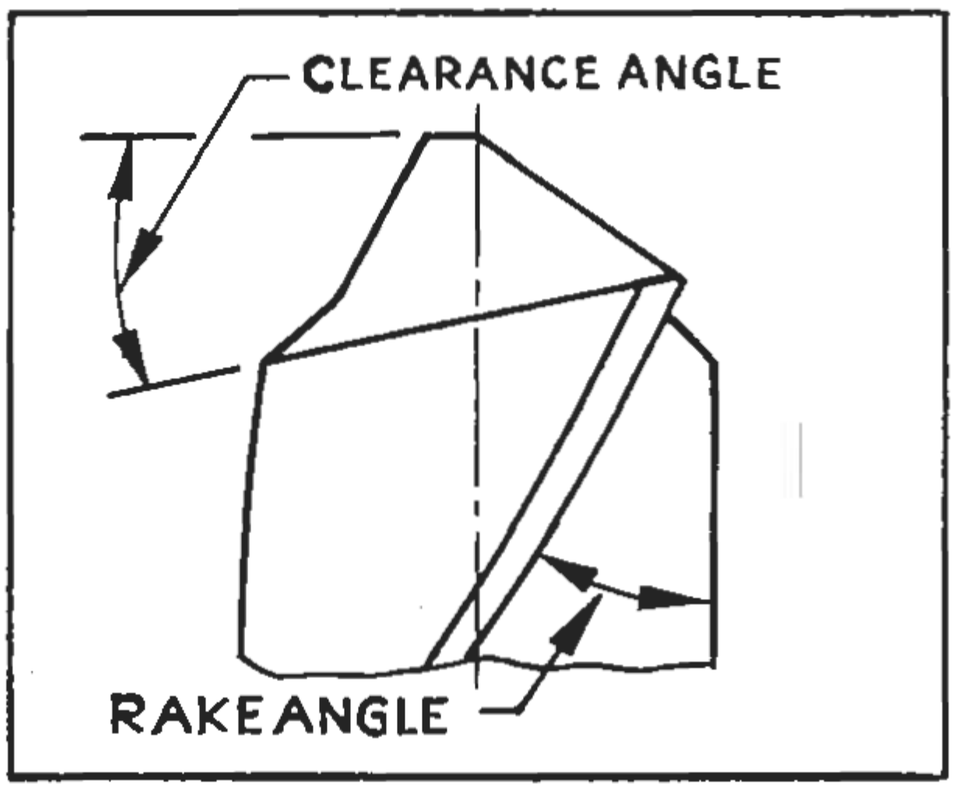


**Fig. 91 Drill Point showing Rake and Clearance Angles**

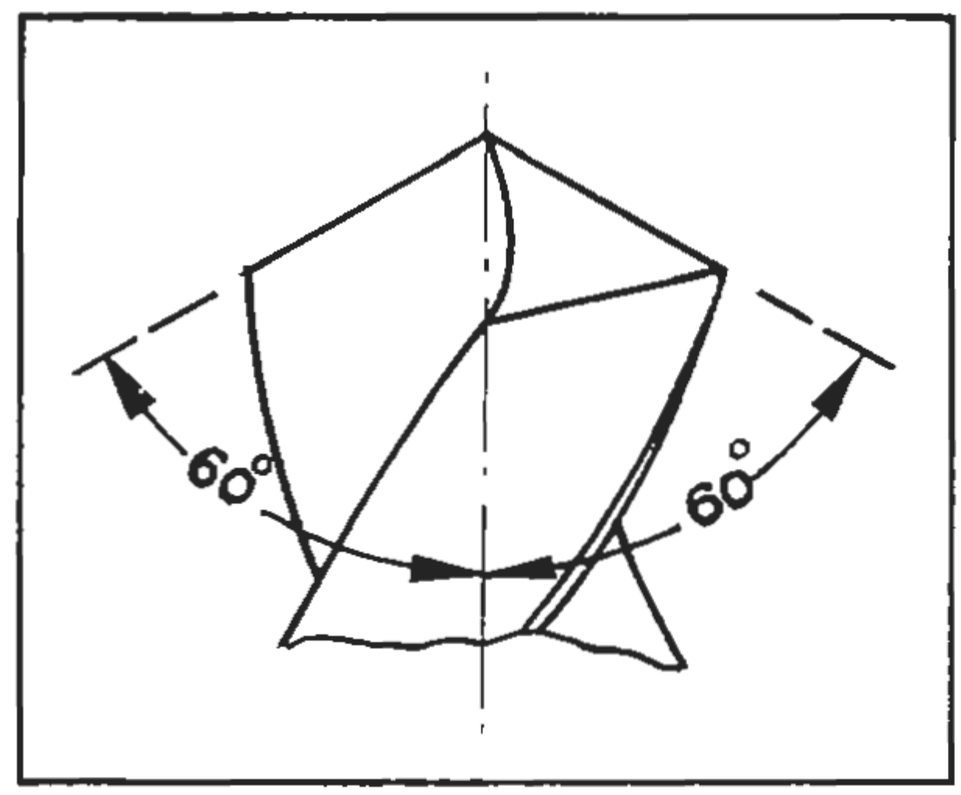


**Fig. 92 Angle of Drill Point**

directly behind the cutting edge, as per Fig. 91. The lip clearance angle for normal work should be between 9° and 12°, and clearance on each lip must be equal.

The included angle of the drill point, Fig. 92, should be 120°, and here again it is essential that the length and angle of each edge be equal. Lips of unequal length or angle will result in the drill cutting oversize and wearing excessively. Fig. 93 illustrates a simple method of determining the short lip of a drill which is found to be cutting oversize. The drill is run at a comparatively slow speed and fed into a piece of cast iron or other soft material; the machine is then stopped while keeping the drill engaged with the job so that it continues to cut until brought to rest. An unevenly sharpened drill cuts on the short side only, and hence the line shown in Fig. 93 indicates the short lip which must be ground to equalise the drill.

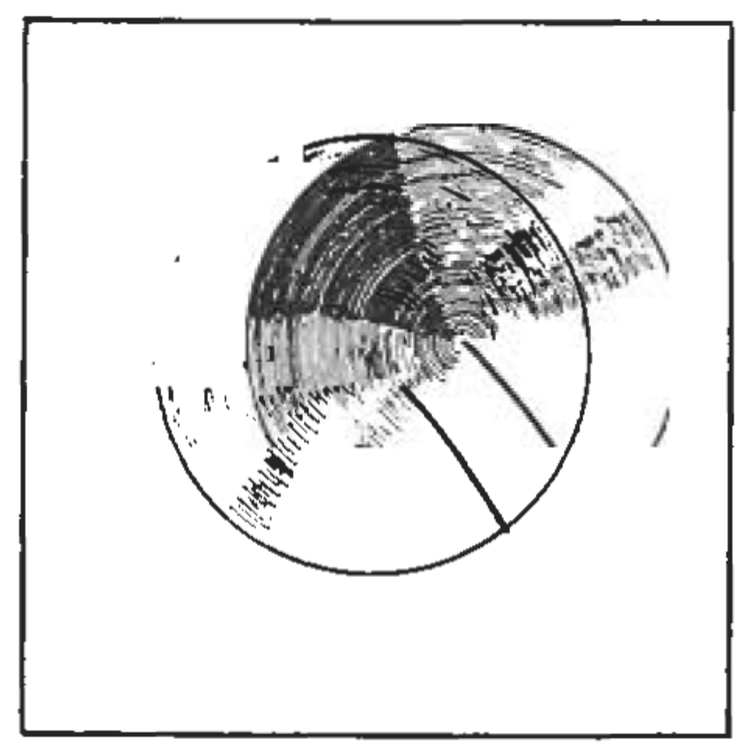

**Fig. 93 Determining the short Lip of a Drill**

On occasions a drill may be deliberately sharpened unevenly in order to produce an oversize hole, but this practice should be avoided where possible.

For drilling soft materials such as brass the tendency for the drill to "dig in" or chatter may be counteracted by grinding a reduced rake angle on the drill, as per Fig. 94. This reduced rake angle is also sometimes helpful when drilling extremely hard materials, as it results in a stronger cutting edge and gives a smoother and more cleanly drilled hole.

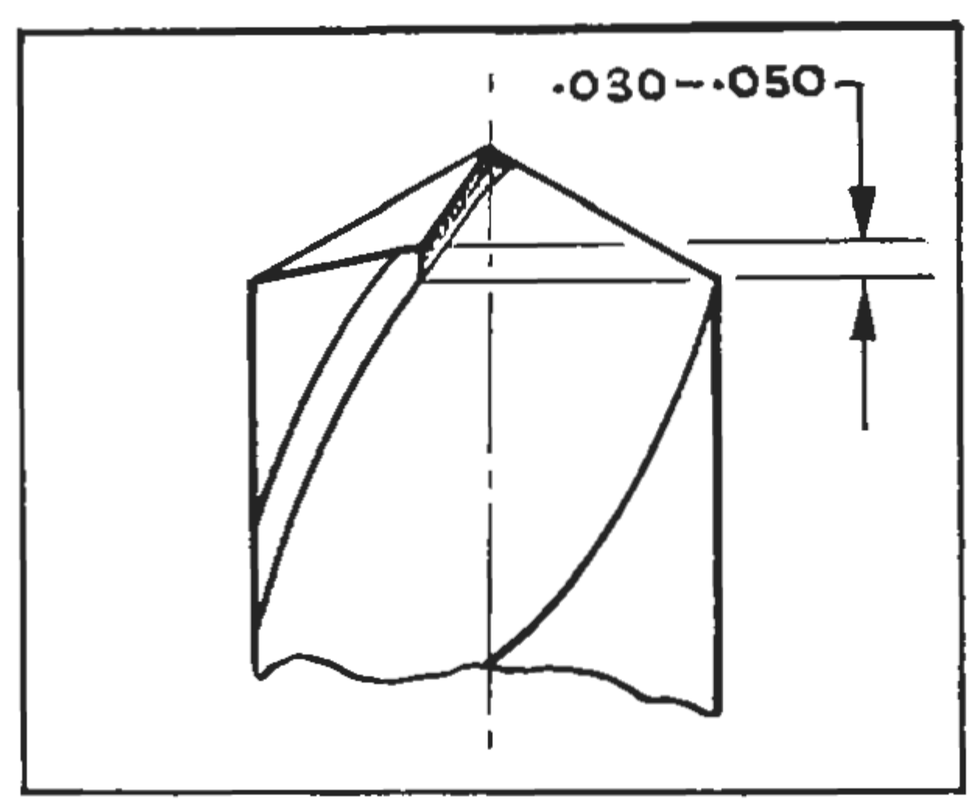


**Fig. 94 Drill Point with reduced Rake Angle**

## Drilling Speeds

Table 7 gives recommended drilling speeds for high speed steel drills, operating under optimum conditions. Surface speeds are calculated on the outside diameter of the drill. For drilling steel or bronze, a coolant of some kind should be used. Cast iron or brass may be drilled dry. When long holes are being drilled, the drill should be withdrawn at intervals to clear the chips.

Speeds for carbon steel drills are approximately one-half those for high speed steel.

### Table 7 Recommended Speeds for High-Speed Steel Drills

| DRILL DIA. | Alumin. | Brass | Bronze | STEEL | | | CAST IRON | |
|---|---|---|---|---|---|---|---|---|
| | | | | Free Cut | Med. Carb. | High Ten. | Soft | Hard |
| | Revolutions Per Minute | | | | | | | |
| $\frac{1}{16}$ | .... | .... | 9,000 | 6,000 | 3,500 | 1,700 | 9,000 | 4,000 |
| $\frac{1}{8}$ | 9,000 | 9,170 | 4,500 | 3,000 | 1,750 | 850 | 4,500 | 2,000 |
| $\frac{3}{16}$ | 6,000 | 6,110 | 3,000 | 2,000 | 1,170 | 570 | 3,000 | 1,330 |
| $\frac{1}{4}$ | 4,500 | 4,580 | 2,250 | 1,500 | 875 | 425 | 2,250 | 1,000 |
| $\frac{5}{16}$ | 3,600 | 3,660 | 1,800 | 1,200 | 700 | 340 | 1,800 | 800 |
| $\frac{3}{8}$ | 3,000 | 3,050 | 1,500 | 1,000 | 585 | 285 | 1,500 | 660 |
| $\frac{7}{16}$ | 2,600 | 2,620 | 1,300 | 870 | 500 | 245 | 1,300 | 565 |
| $\frac{1}{2}$ | 2,250 | 2,280 | 1,125 | 750 | 440 | 210 | 1,125 | 500 |
| $\frac{5}{8}$ | 1,800 | 1,830 | 900 | 600 | 350 | 170 | 900 | 400 |
| $\frac{3}{4}$ | 1,500 | 1,525 | 750 | 500 | 295 | 140 | 750 | 330 |
| $\frac{7}{8}$ | 1,300 | 1,310 | 650 | 435 | 250 | 120 | 650 | 280 |
| 1 | 1,120 | 1,140 | 560 | 375 | 220 | 105 | 560 | 250 |

## Deep Hole Drilling

The drilling of a hole of comparatively small diameter through a long shaft is always a difficult operation due to the tendency for the drill to wander off centre as it advances. This is a cumulative effect and in extreme cases can cause the drill to break out through the side of the shaft.

The first requirement for successful deep hole drilling is that the hole should start true. For holes in difficult materials it is sometimes advisable to start the hole undersize and bore it to size for a length of 2 diameters in order to ensure a true start.

To cover the full length of the hole it is necessary to make a series of extension drills by brazing pieces of silver steel or other suitable material to the ends of parallel shank drills. These drills are often sharpened with points having included angles up to 150° which reduces the tendency to wander but sacrifices life between re-grinds.

As the coolant cannot reach the cutting edge and chips cannot freely escape it is necessary to withdraw the drill at frequent intervals. This is done by sliding the tailstock back along the bed and should be done as often as is necessary to prevent overheating of the cutting edge or build up of chips. At every third or fourth withdrawal it can be helpful to release the drill in the tailstock and rotate it through about 30°, always in the same direction. The cutting edge of the drill should be kept sharp and the feed should not be forced.

It is seldom possible to entirely prevent a deep hole from wandering. On jobs of

this nature it is advisable therefore to drill the hole at an early stage, while ample stock remains on the outside, fit plugs or mount the component on pipe centres and machine the outside concentric to the hole.

## Reaming

Reamers are used in the lathe as a means of finishing holes to standard sizes quickly and accurately. Holes are first drilled and bored to within approximately .010″ of size and then finished by reaming. Slow spindle speeds are used together with a fast rate of feed, and when reaming steel it is essential that a cutting lubricant of some sort be used. The lathe should **not** be reversed when withdrawing the reamer.

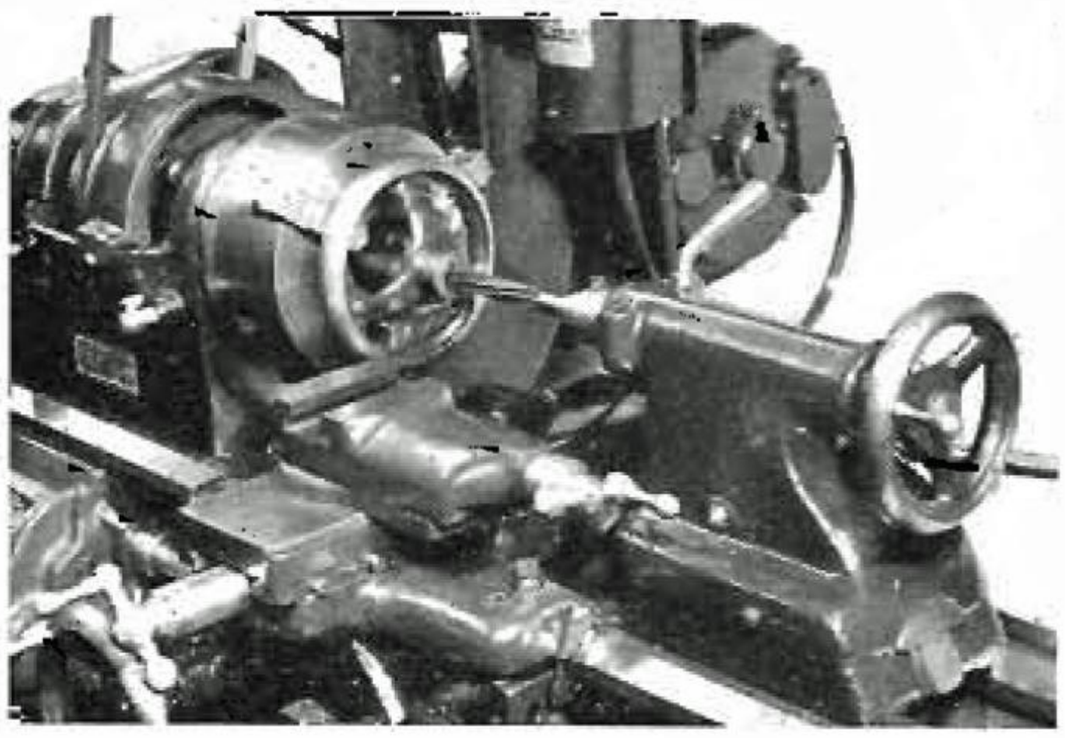

**Fig. 95 Reaming in the Lathe**

## Drill and Reamer Sizes

In addition to the range of standard fractional sizes advancing by 64ths, twist drills are available in a range of decimal sizes corresponding to the correct hole diameters for tapping the various standard screw threads. These decimal sizes are designated by a system of numbers and letters and are listed in Tables 16 and 17 at the end of this book.

Reamers are available in all standard fractional sizes, advancing by 64ths. "Machine reamers" are made parallel throughout their length, and are available with either parallel or standard taper shanks. "Hand reamers" are slightly tapered at the end to facilitate starting them properly, and are normally made with parallel shanks.

## Adjustable Reamers

A number of excellent types of adjustable reamers are available, and these are finding increasing usage in production work or as a means of finishing holes of non-standard diameter. These reamers usually have two blades set opposite each other in a floating holder and are adjustable through a limited range ($\frac{1}{16}$″ on small diameter reamers and $\frac{1}{8}$″ on larger reamers). The effect of the floating blade holder is to allow the reamer to follow the bored hole, so avoiding the effects of any misalignment between the work and the reamer. The amount of stock left in the hole for an adjustable reamer is considerably less than for a solid reamer, usually .002″ to .003″. Practical manufacturing difficulties set $\frac{1}{2}$″ diameter as the approximate lower limit for which these reamers are at present considered feasible.

**Fig. 96 Adjustable Reamer**

CHAPTER SEVEN

# TAPER TURNING AND BORING

There are three methods in common use of turning tapers in the lathe; by swivelling the compound rest, by setting over the tailstock and by use of a taper turning attachment. The method adopted will depend on the size and angle of the taper required and the equipment available.

Regardless of the method used, the point of the cutting tool must always be set exactly on centre for taper turning, as the surface of a true cone is a straight line only along the surface of its central section.

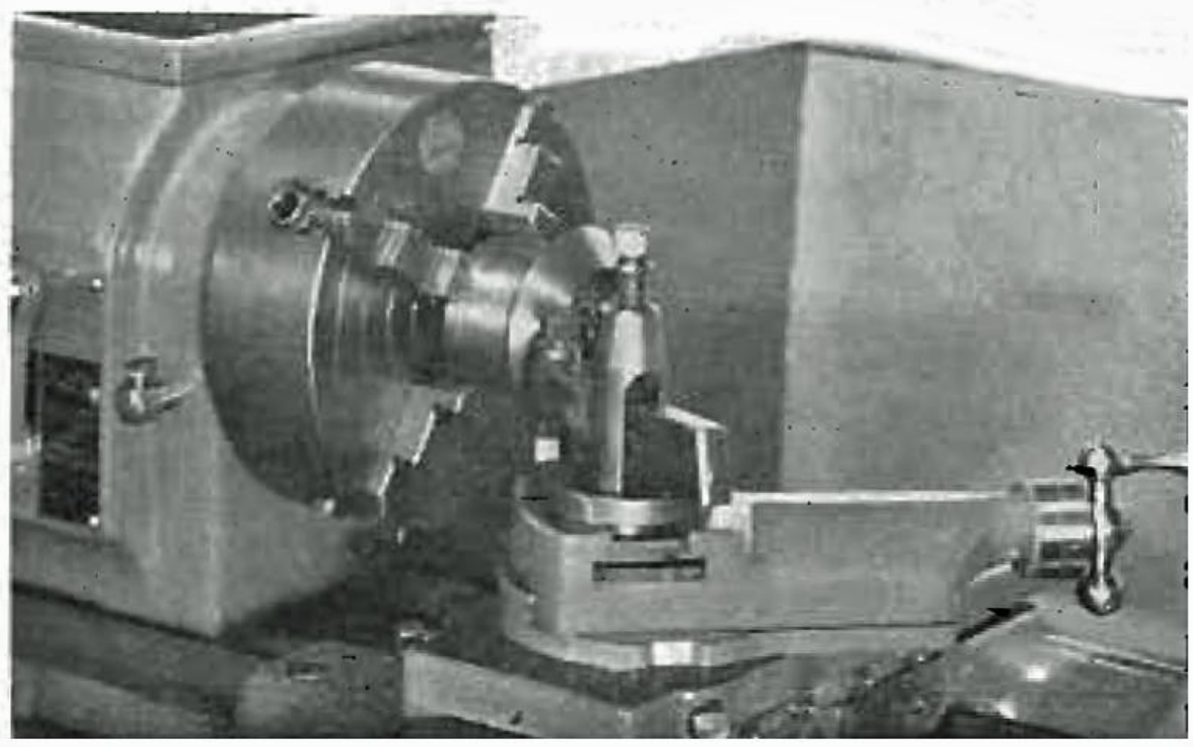

**Fig. 97 Turning a Bevel Gear Blank with the Compound Rest**

## Taper Turning with the Compound Rest

The compound rest can be swivelled to any angle and is ideal for producing short steep tapers or boring tapered holes. Where the desired taper is expressed as an angular measurement the compound rest is set at one-half of the total included angle. Where the taper is expressed in inches per foot the included angle may be calculated as follows:

$$\text{Tangent of included angle} = \frac{\text{Taper per foot (inclusive, inches)}}{12}$$

## Taper Turning by off-setting the Tailstock

Where the work is of a nature which will allow its being machined between centres, taper turning may be carried out by off-setting the tailstock centre by means of the two set-over screws provided in the tailstock top. The amount by which the tailstock top must be set over to obtain a given taper per foot is dependent on both the amount of taper required and the over-all length, between centres, of the workpiece. Fig. 99 illustrates how differing lengths of the workpiece will result in different tapers from the same amount of tailstock set over.

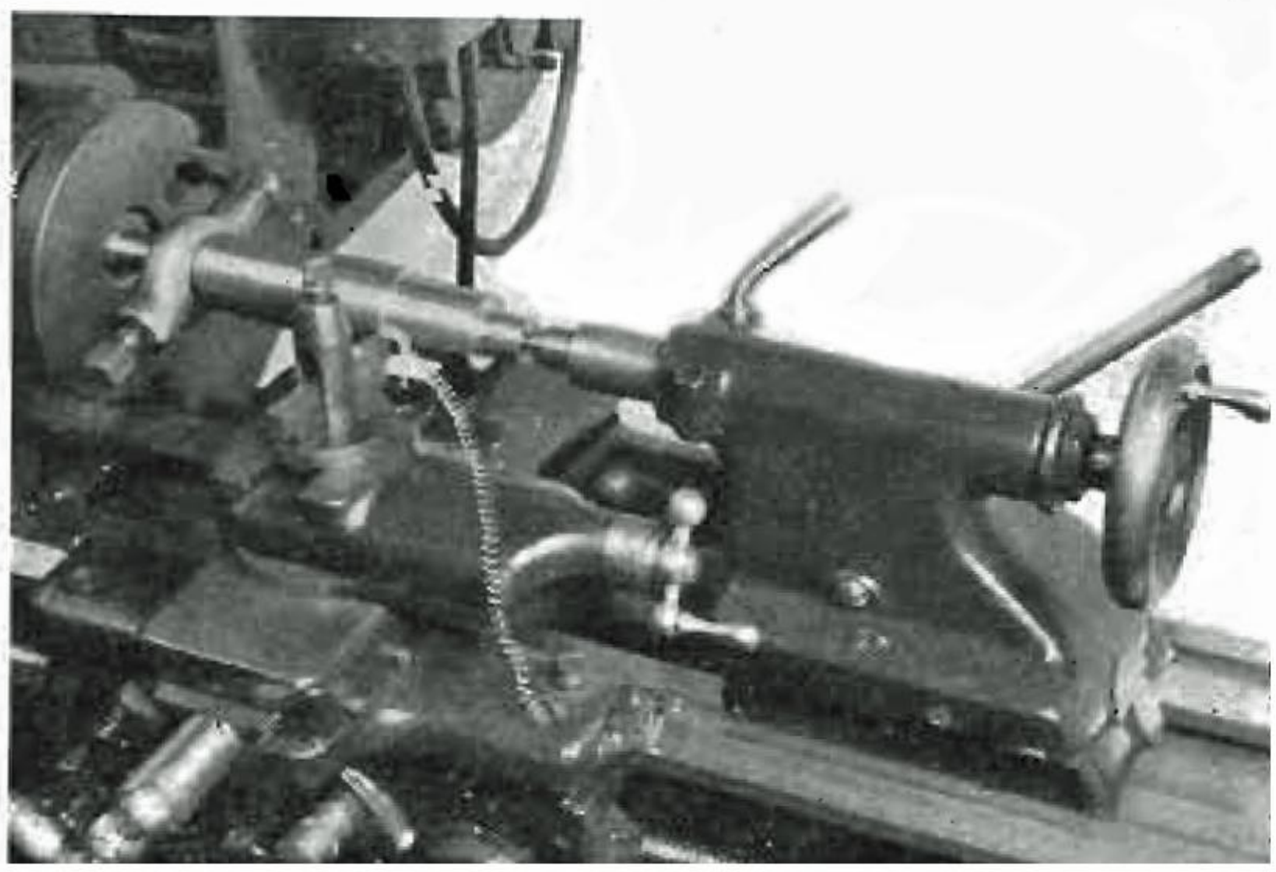

**Fig. 98 Turning a tapered Shaft with Tailstock Centre off-set**

The amount of set over required may be calculated as follows:
D = set-over, in inches
When taper per foot is given

$$D = \frac{\text{Taper per foot x length between centres (inches)}}{24}$$

When diameters at each end of the tapered portion of a piece of work are given

$$D = \frac{\text{Total length between centres (inches)}}{\text{length of tapered portion}} \times \frac{\text{Large dia.} - \text{Small dia.}}{2}$$

When the taper is given in degrees it may be expressed in inches per foot as follows:
Taper per foot (inclusive, inches) = Tangent included angle x 12

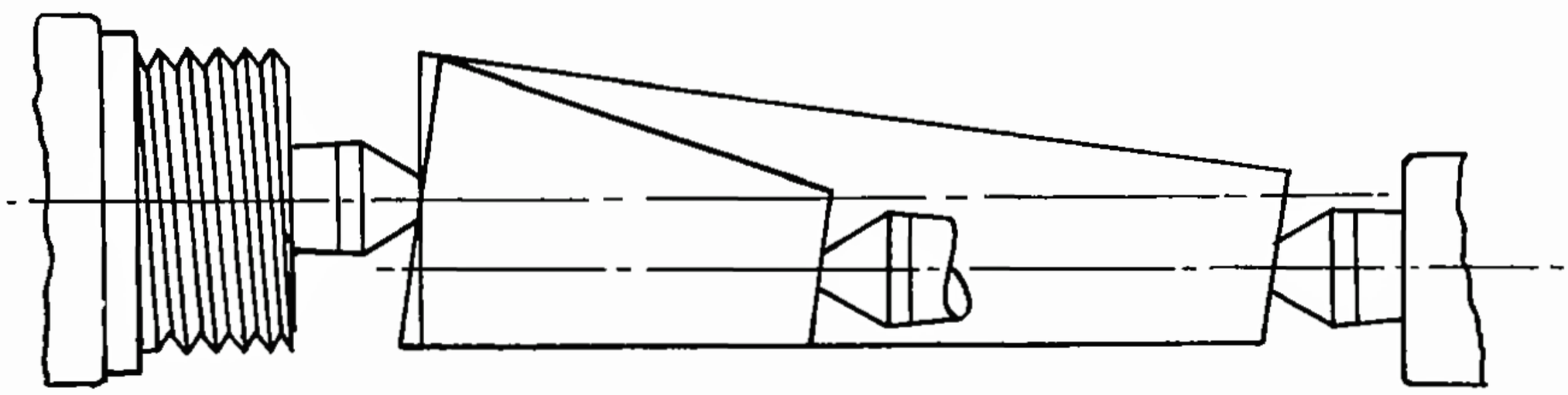

**Fig. 99 Effects of Differences in Length between Centres on the Angle of Taper resulting from a given amount of off-set**

## Re-Aligning the Tailstock after Taper Work

After the tailstock has been used for taper turning it is necessary to restore it to its correct position in relation to the headstock centre before the lathe can be used again for parallel turning. The tailstock top is first brought approximately to its correct position by adjusting the set-over screws until the index lines on the back of the tailstock, Fig. 100, coincide. Final adjustment may be made as follows: A check bar about 6 inches in length having a collar close to each end, as shown in Fig. 101, is mounted between centres and a light trial cut taken over both collars without disturbing the adjustment of the cutting tool. The diameter of each collar is then measured, the difference in their diameters being equal to twice the error in alignment of the tailstock. The tailstock top must be adjusted towards the operator when the tailstock end collar is the larger of the two, and away from the operator when it is the smaller.

**Fig. 100 Tailstock Index Marks**

## The Taper Turning Attachment

The addition of a taper turning attachment to a lathe greatly simplifies the turning and boring of tapers and gives many advantages over the method of

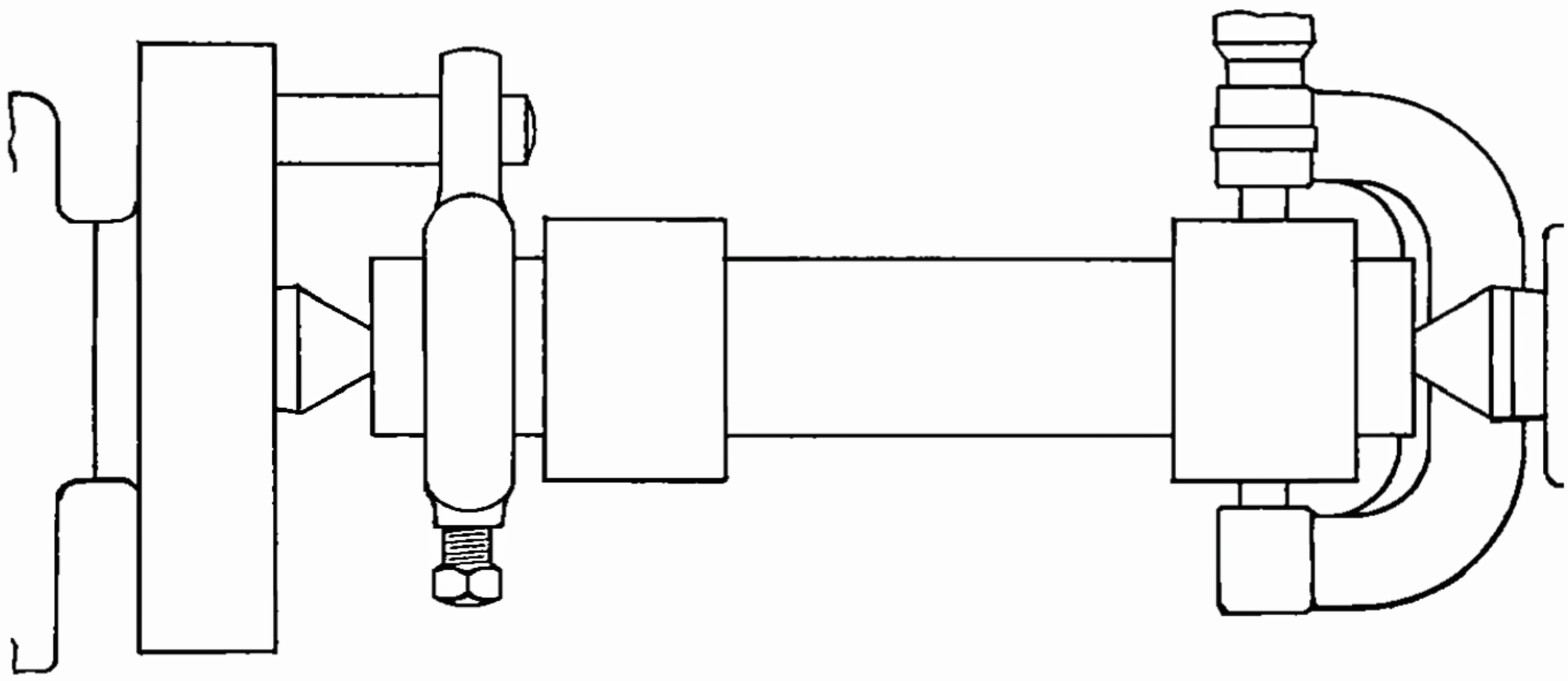

**Fig. 101 Test Bar for checking Alignment of Lathe Centres**

off-setting the tailstock. Lathe centres need never be shifted out of alignment duplicate tapers may be produced regardless of differing lengths of the workpiece and tapered holes can be bored quickly and easily. The taper turning attachmen does not interfere with the use of the lathe for parallel turning.

The taper attachment supplied for the Hercus 9″ swing lathe is of the plai type and requires removal of the cross-feed screw when in use, crosswise adjust ment of the cutting tool being obtained by swinging the compound rest throug 90° to a position parallel to the cross-slide, as per Fig. 102. The cross-fee screw, together with the bushing, graduated collar and ballcrank, is removed a one unit by unscrewing the cross-feed bushing from the front of the saddle b means of a short steel rod inserted in the hole drilled in the bushing for thi purpose (see Fig. 103).

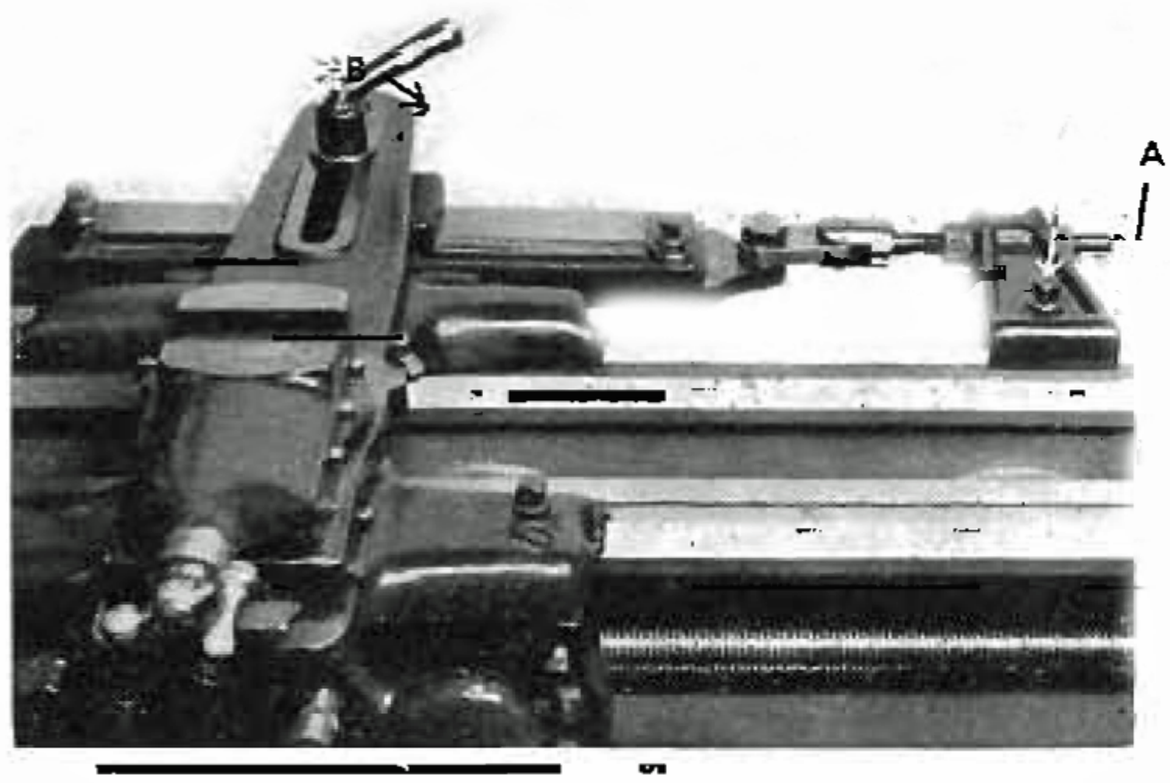


**Fig. 102 Taper Turning Attachment shown with Cross Feed Screw removed**

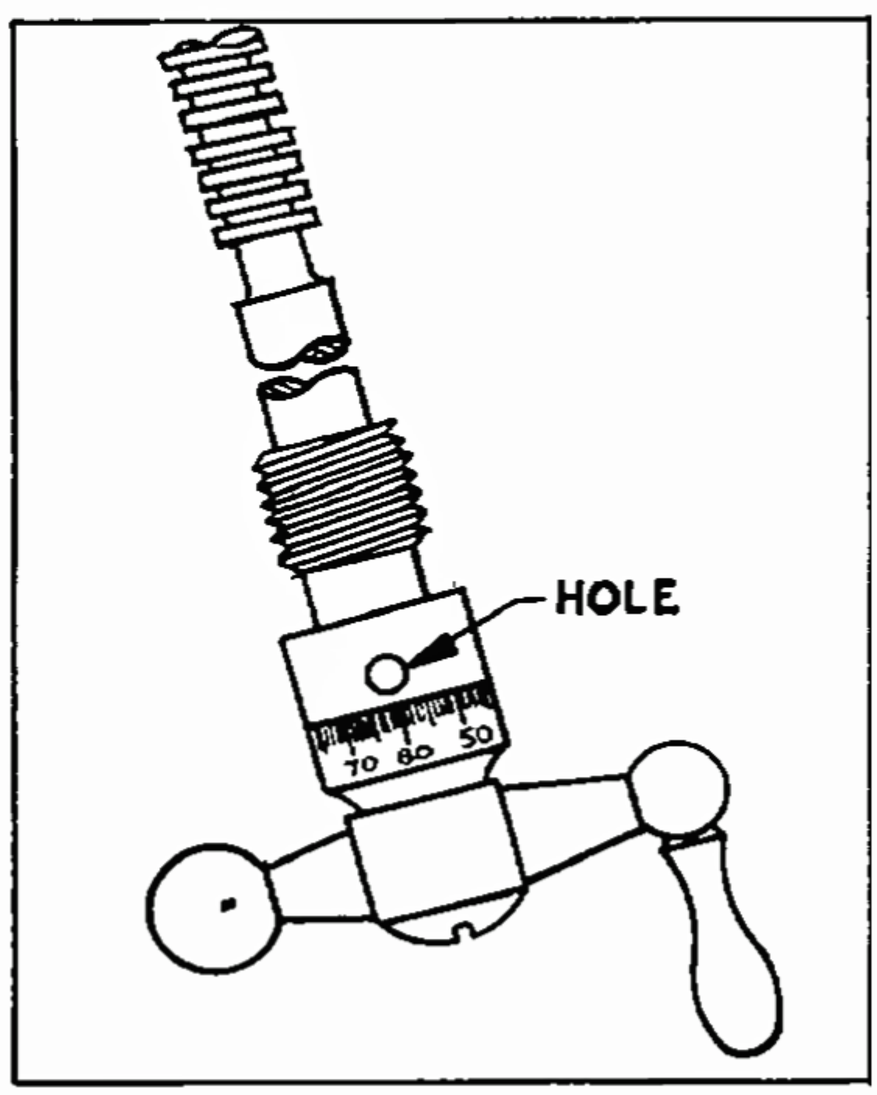


**Fig. 103 Cross Feed Screw Assembly**

Removal of the cross-feed screw leaves the cross-slide free to be brought unde control of the swivel slide of the taper turning attachment, and the angle a which this slide is set is thus reproduced on the workpiece. The taper turnin attachment is engaged by clamping the anchor bracket to the lathe bed by mean

of clamp screw "A", Fig. 102, and the cross-slide extension to the swivel slide shoe by means of the clamp handle "B", Fig. 102. Releasing the anchor clamp screw "A" with clamp handle "B" still locked allows the taper attachment to travel idly with the saddle, and in this condition the lathe is suitable for parallel turning without the need to replace the cross-feed screw. This is most convenient when engaged on work of a nature requiring frequent changes from taper to parallel turning.

It is important that both bed clamp screw "A" and clamp handle "B" be loosened before re-inserting the cross-feed screw. When the taper attachment is not in use it is advisable to remove the bed clamp altogether from the lathe to avoid the possibility of accidental damage.

## Adjustment of Taper Turning Attachment

The swivel slide of the taper attachment is graduated in degrees at one end and inches per foot at the other as per Fig. 104. In both cases the graduations are inclusive and indicate the total included taper which will be produced.

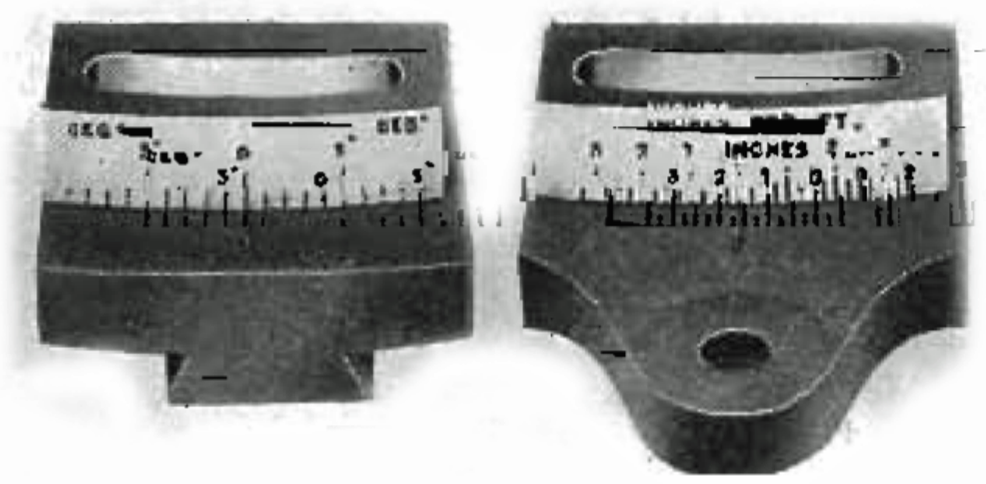

**Fig. 104 Graduations of Swivel Slide**

Where possible tapers should be checked by means of taper gauges, Fig. 105. The angle of the taper is tested by making a mark along the length of the taper with bearing blue, chalk, or a lead pencil, placing the taper in its mating gauge and turning the two against each other for a fraction of a turn. The resultant smudging of the mark will show where the taper is bearing and what further adjustment, if any, is required.

**Fig. 105 Plug and Ring Taper Gauges**

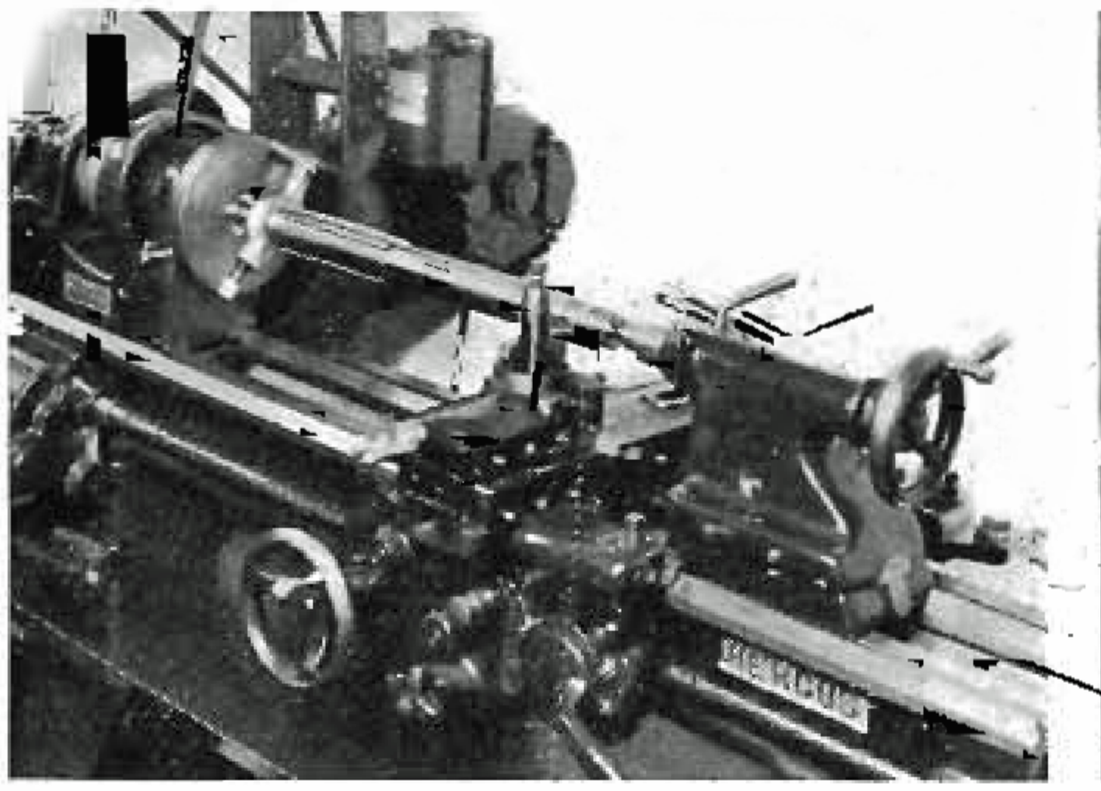

**Fig. 106 Turning a Tapered Shaft with the Taper Attachment**

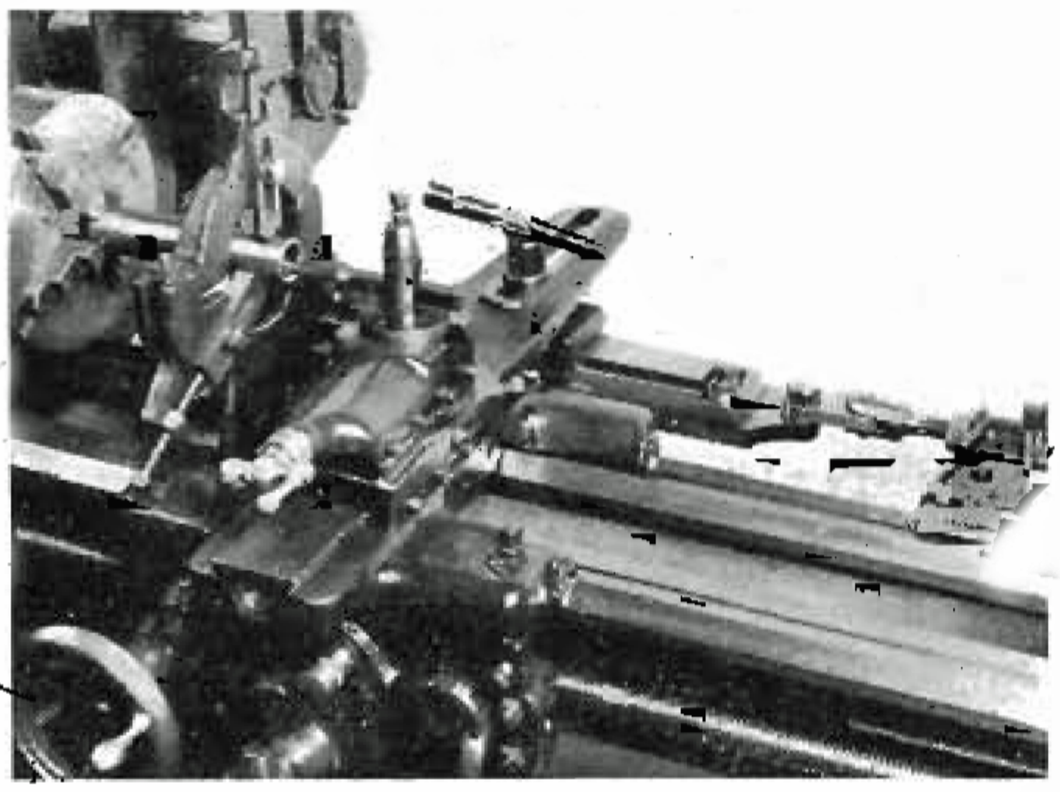

**Fig. 107 Boring a Tapered Hole with the Taper Attachment**

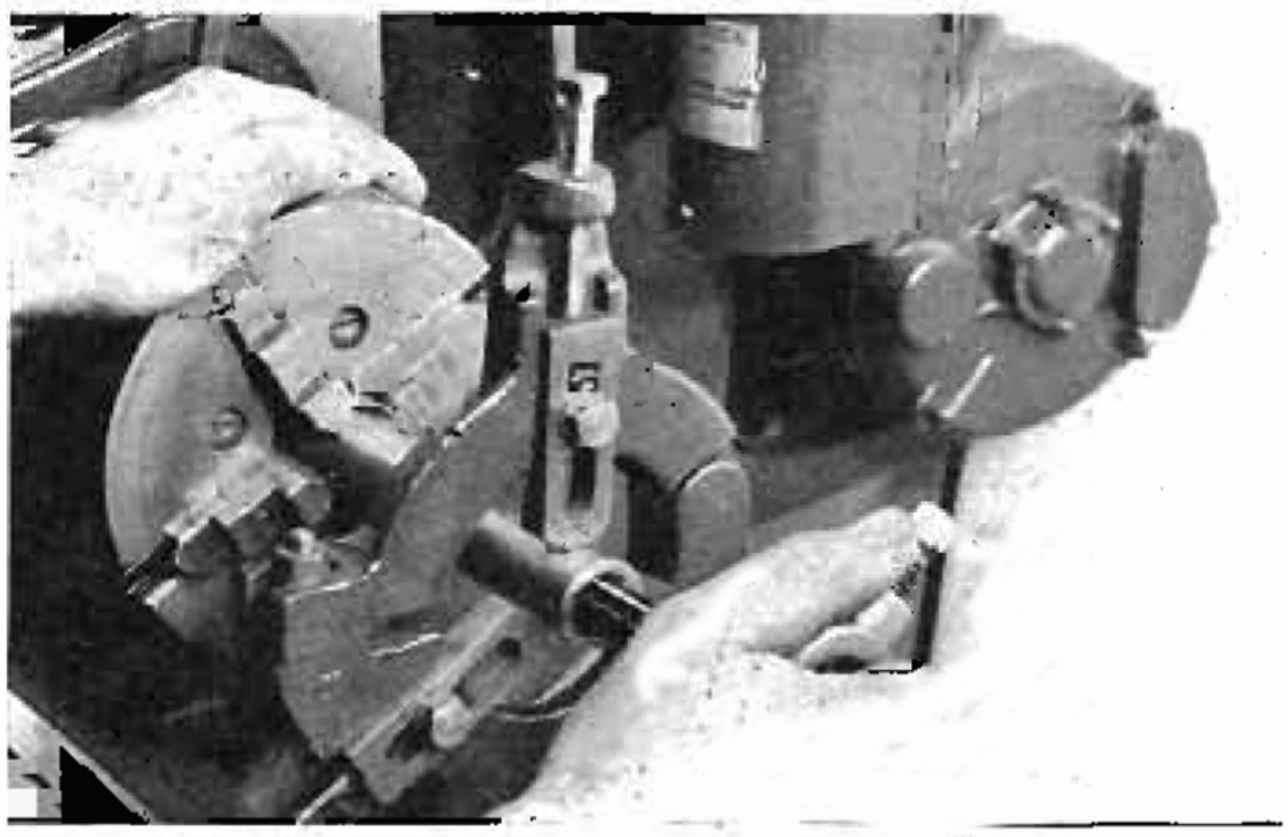

**Fig. 108 Finishing a Tapered Hole with a Hand Reamer**

Standard taper holes can be reamed by hand with a tapered reamer after roug boring to approximate size and taper, and where a number of such holes ai required this makes for greater speed and uniformity. Details of standard tape: are given in tables at the end of this book.

CHAPTER EIGHT

# SCREW THREADS AND SCREWCUTTING

Few things play so vital a part in today's mechanised world as the screw thread, a principle which owes its existence to the lathe and still remains one of the most vital phases of lathe work. Screw threads perform a variety of functions and take many different forms; basically, however, a thread has five principal characteristics, diameter, form, pitch, lead, and hand. These, together with some of the terms commonly used in connection with screw threads, are summarized below.

**MAJOR DIAMETER.** The largest diameter of a thread, internal or external. In case of a screw it is the diameter over the tops of the threads; for a nut it is the diameter to the bottom of the grooves. The major diameter is always used to designate the size of a thread, in which case it is usually a nominal size indicating the theoretically correct diameter. In practice the actual major diameter of a screw is slightly less and of a nut slightly greater than the theoretical major diameter.

**MINOR DIAMETER.** The smallest diameter of a thread, internal or external, for a screw the diameter to the bottoms of the grooves and for a nut the diameter to the tops of the threads.

**PITCH DIAMETER.** The diameter of an imaginary cylinder which would intersect the threads at such points as to make equal the width of the threads and the spaces between them.

**DOUBLE DEPTH OF THREAD.** The difference between the major and minor diameters.

**DEPTH OF THREAD.** One-half the difference between the major and minor diameters.

**FORM.** The cross sectional shape and proportions of the raised helical ridge or "helix" of the thread. Details of the more commonly used thread forms are given on pages 50-52.

**PITCH.** The distance from a point on a screw thread to a corresponding point on the next thread in a line parallel to the axis. The pitch is frequently expressed in terms of threads per inch, in which case

$$\text{Pitch} = \frac{1}{\text{No. of Threads per inch}}$$

**LEAD.** The distance the helix advances in making one complete revolution of 360°. For a single start screw the lead is equal to the pitch. For a multiple start screw the lead is the product of the pitch and number of starts. Unless specified otherwise all threads are taken as being single start.

**HELIX ANGLE.** The angle made by the helix of the thread at the pitch diameter with a plane perpendicular to the axis. The helix angle is determined as follows:

$$\text{Tangent Helix Angle} = \frac{\text{Lead}}{\text{Pitch dia. x } 3.1416}$$

For this purpose pitch dia. is taken as being (Nominal Major Dia. — Theoretical Depth of Thread).

**CREST.** The top surface joining the sides of a thread.

**ROOT.** The bottom surface joining the sides of two adjacent threads.

**FLANK.** The surface of a thread connecting the crest to the root.

**HAND.** The direction of inclination of the helix. A right-hand thread is one which advances when revolved in a clock-wise direction; a left-hand thread advances when revolved in an anti-clock-wise direction. See Figs. 109 and 110. Unless specified otherwise, all threads are cut right-hand.

**Fig. 109 Right hand thread**

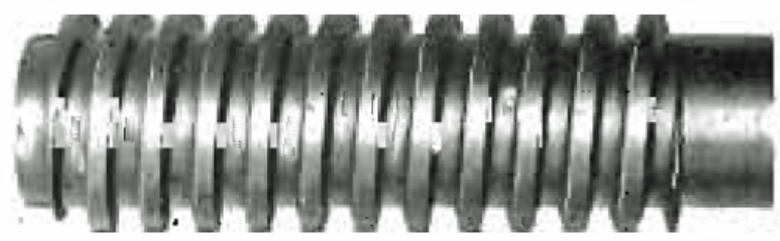

**Fig. 110 Left Hand Thread**

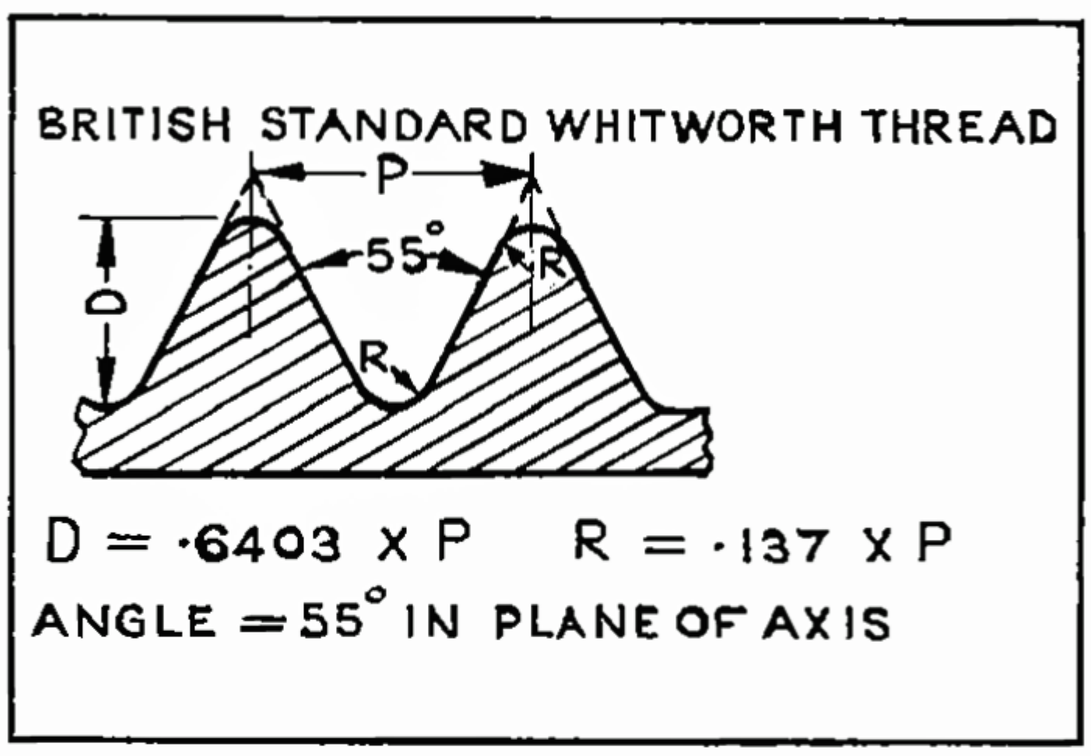


**Fig. 111**

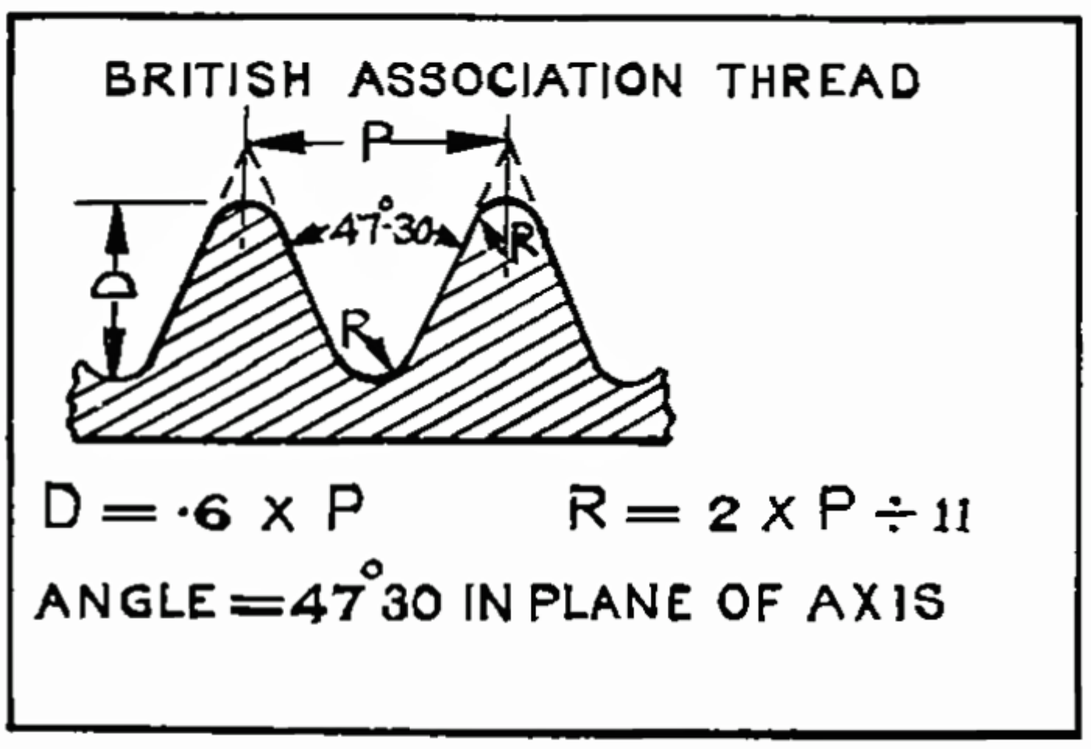


**Fig. 112**

## Thread Forms

The following pages illustrate the more widely used thread forms, the general dimensions and proportions of each, and their individual characteristics when in use.

The British standard Whitworth thread, Fig. 111, is the principal thread form in use in British countries. The large radius of the root makes for long tool life and economy of production and together with the steep angle at which the sides are inclined gives a thread of great strength and good locking characteristics.

The British association thread form, Fig. 112, is similar to the Whitworth form, but its use is confined to threads of small diameter and fine pitch. Because of the small diameters involved the maximum strength is required with a minimum depth of thread, and this is accomplished by establishing the sides of the thread at an angle of 47½° and providing an increased root radius.

The American standard thread, Fig. 113, was the thread form used widely in the United States but which has now been largely superseded by the international thread form, see page 51.

The international or unified thread, Fig. 114, is the form agreed upon by Britain and the United States in order to standardise the screw threads of defence equipment. It is similar to the American standard except for the root radius, which gives a considerably stronger thread. For most commercial applications it is interchangeable with the American thread which it has largely superseded.

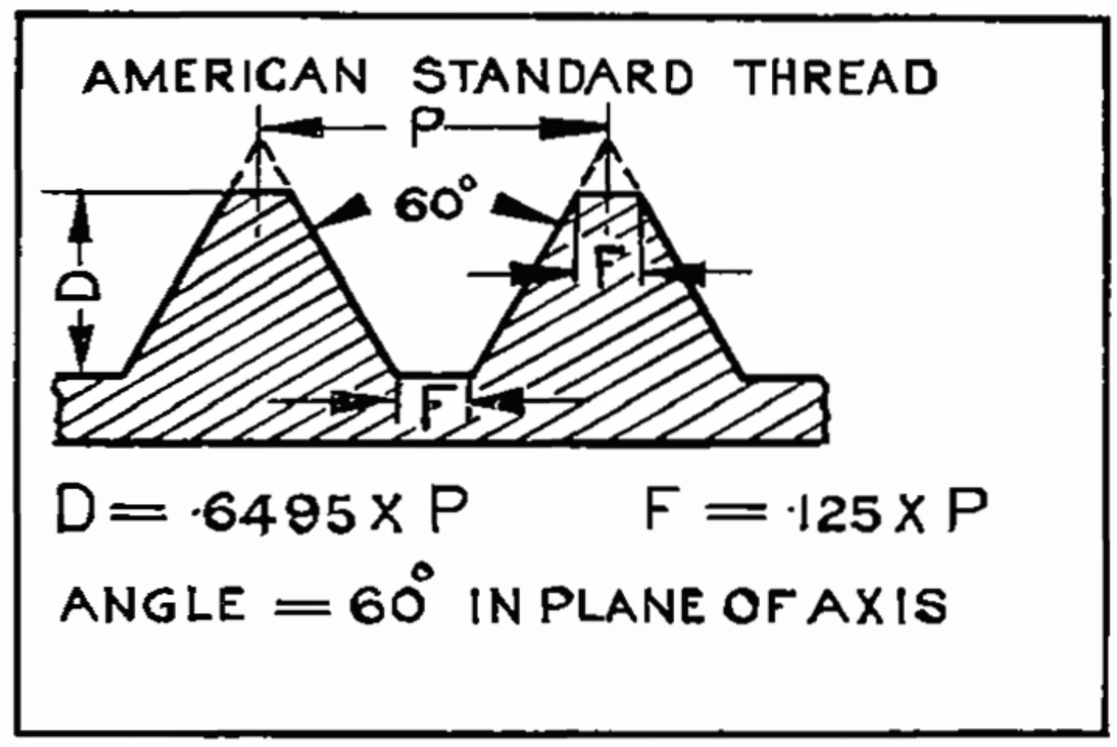


Fig. 113

The international standard metric thread, Fig. 115, is used for nearly all threads of metric dimensions and is similar to the unified form, differing only in the amount of root radius.

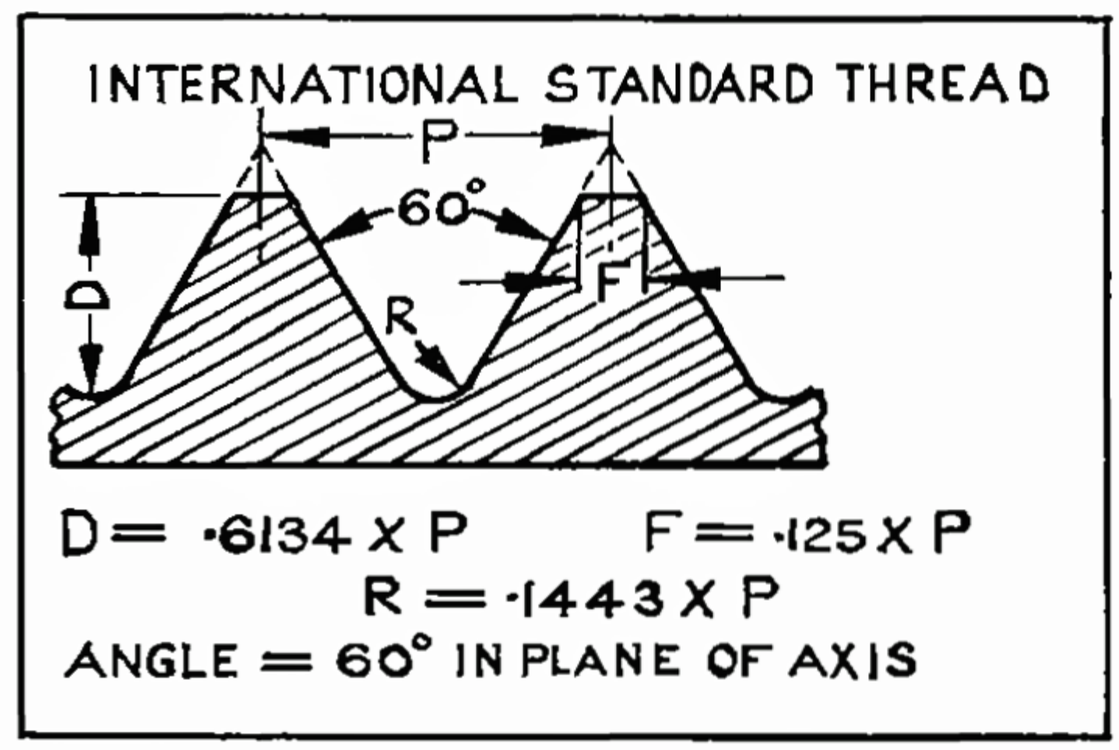


Fig. 114

The Acme thread, Fig. 116, is widely used as a power transmitting thread in feed screws and similar applications. In common with the square thread it has great strength and load carrying characteristics, but with the added advantage that it is more economically produced than the latter, while its sloping sides make possible its use with a split nut.

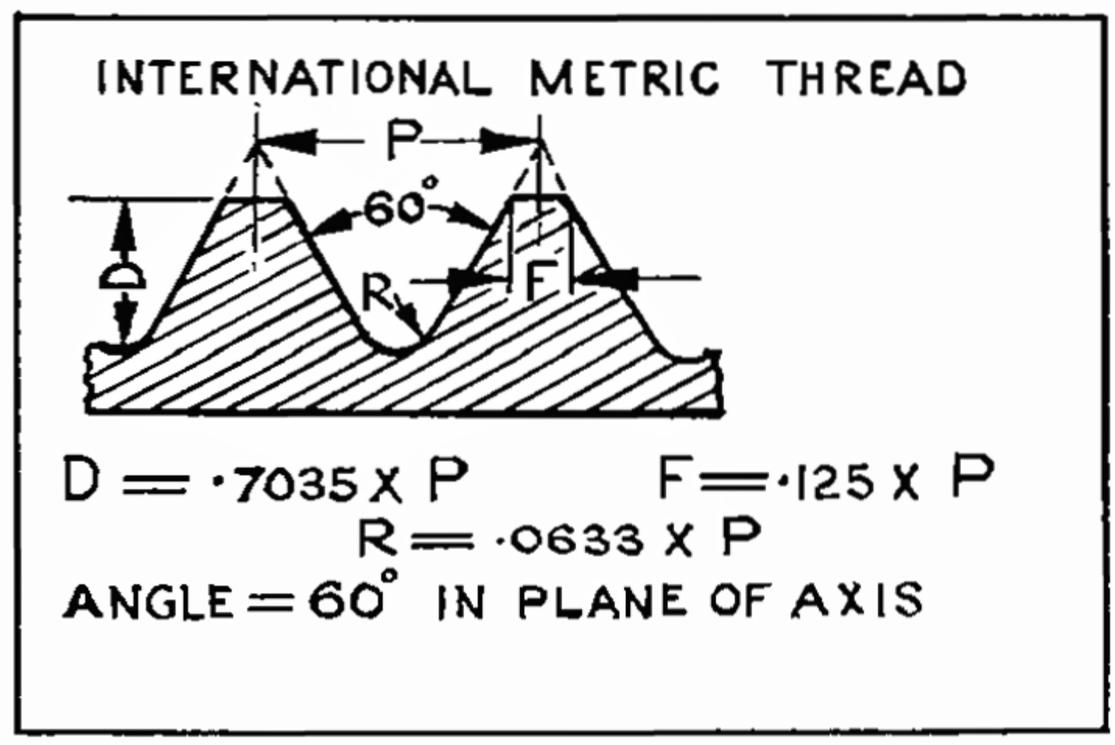


Fig. 115

The square thread, Fig. 117, is widely used in jacks and clamping equipment, where its relatively small contact area and absence of wedging action between mating parts reduces friction to a minimum and gives excellent power transmission characteristics.

The buttress thread, Fig. 118, is used for conditions of great one-way stress such as in gun breeches and certain types of vices. For some applications the pressure face of the thread is made slightly undercut and not square with the axis, as illustrated. The shear strength of a buttress thread is approximately double that of an equivalent square thread.

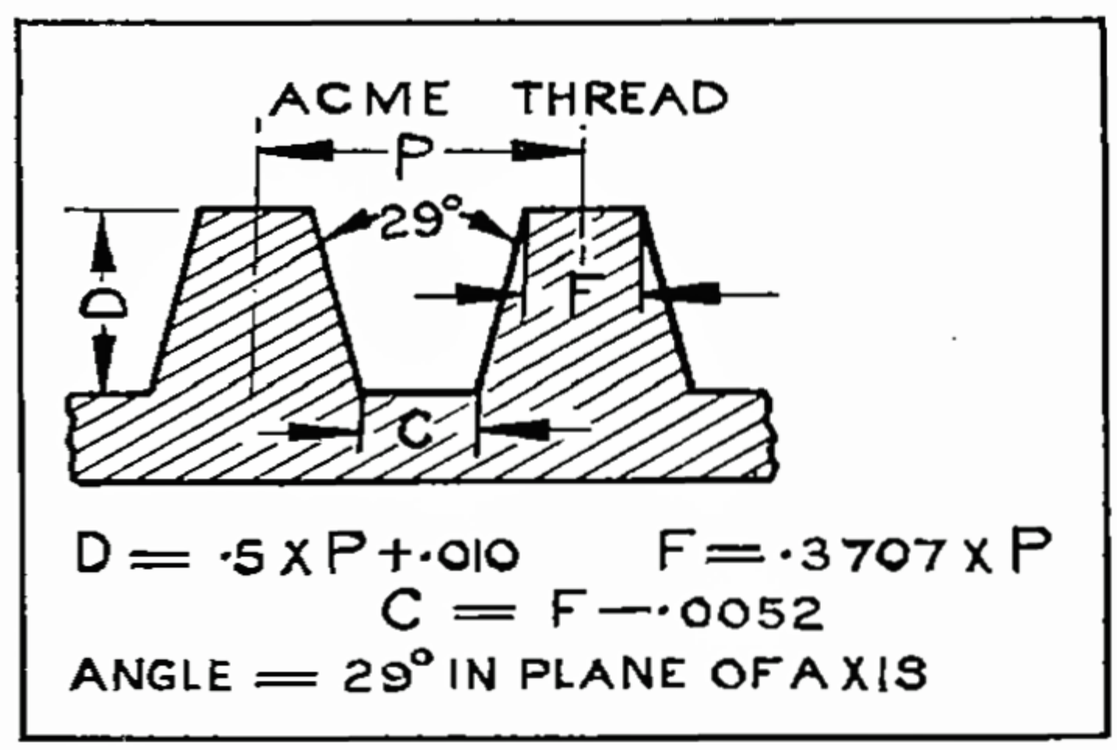


Fig. 116

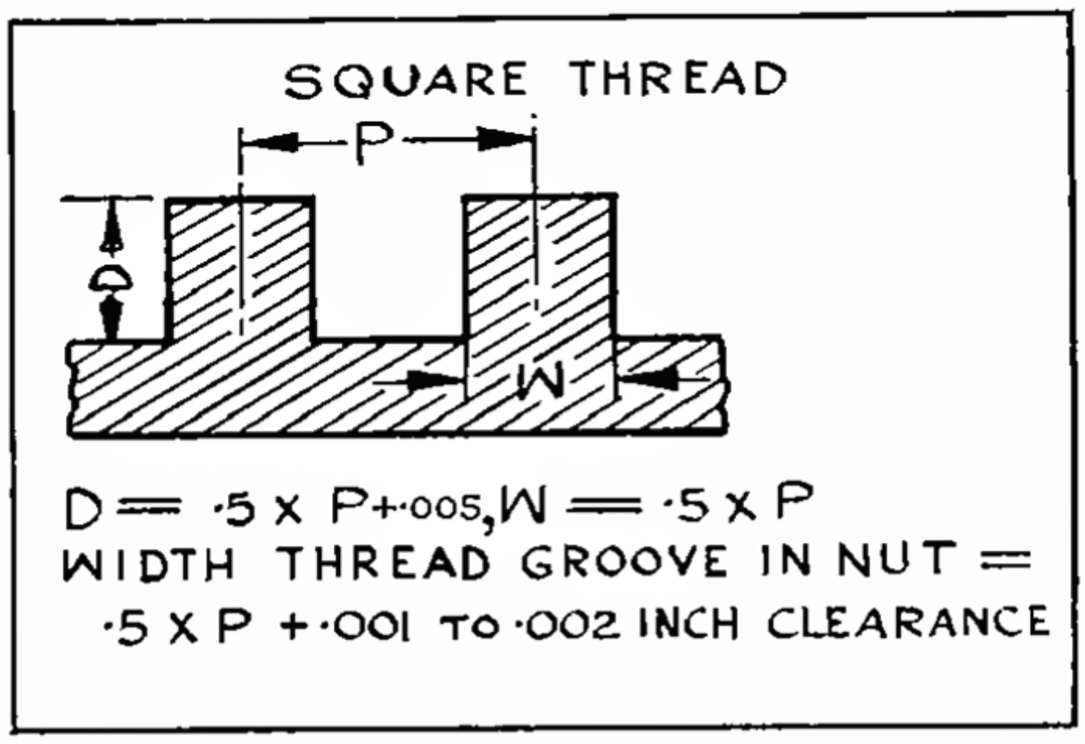


Fig. 117

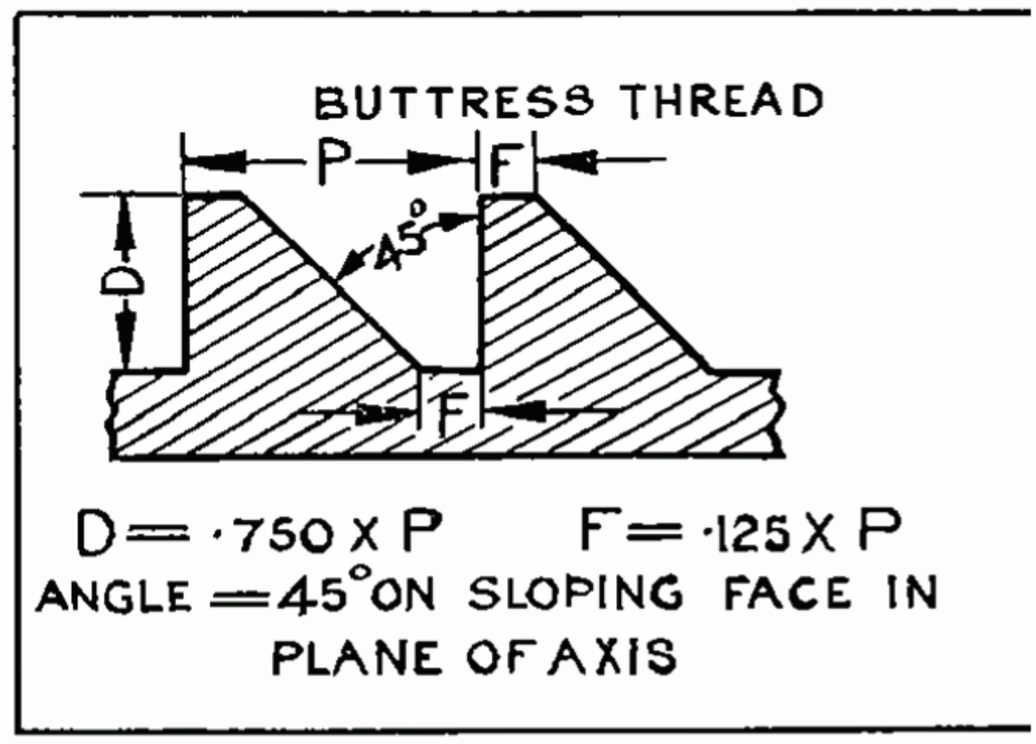


Fig. 118

## Worm Threads

Worm threads in many forms are used in worm gearing for the transmission of power between shafts at right angles to each other, as per Fig. 119. As a consequence of their radically differing functions, worm threads differ on several basic points from other screw threads. The principal difference is the angle between the flanks of the thread, which is, in the case of a worm, measured normal to the helix and not in line of axis as with other threads. The effect of this, while extremely small in the case of single start threads of small helix angle, becomes significant as the helix angle increases. It is customary to specify the angle of the flanks of a worm thread in terms of the "pressure angle" or one-half of the included angle. The pressure angles in most common use are 14½° and 20°.

The pitch of a worm is measured in the line of axis as with other threads, while the depth is calculated in the same manner as for gear teeth and is independent of the pressure angle.

Formulae for worm thread depths are as follows:

| | | |
|---|---|---|
| ADDENDUM (Height above pitch dia.) | = | Pitch x .3183 |
| DEDENDUM (Depth below pitch dia.) | = | Pitch x .3683 |
| WHOLE DEPTH | = | Pitch x .6866 |
| WORKING DEPTH | = | Pitch x .6366 |

Fig. 119 Worm and Wormwheel

## Cutting Screw Threads in the Lathe

The generation of screw threads in the lathe is accomplished by combining rotary motion of the work with lengthwise motion of the cutting tool. This is achieved by a leadscrew, positively driven from the spindle through gearing and which propels the lathe saddle, carrying the tool, along the bed through medium of the half-nuts.

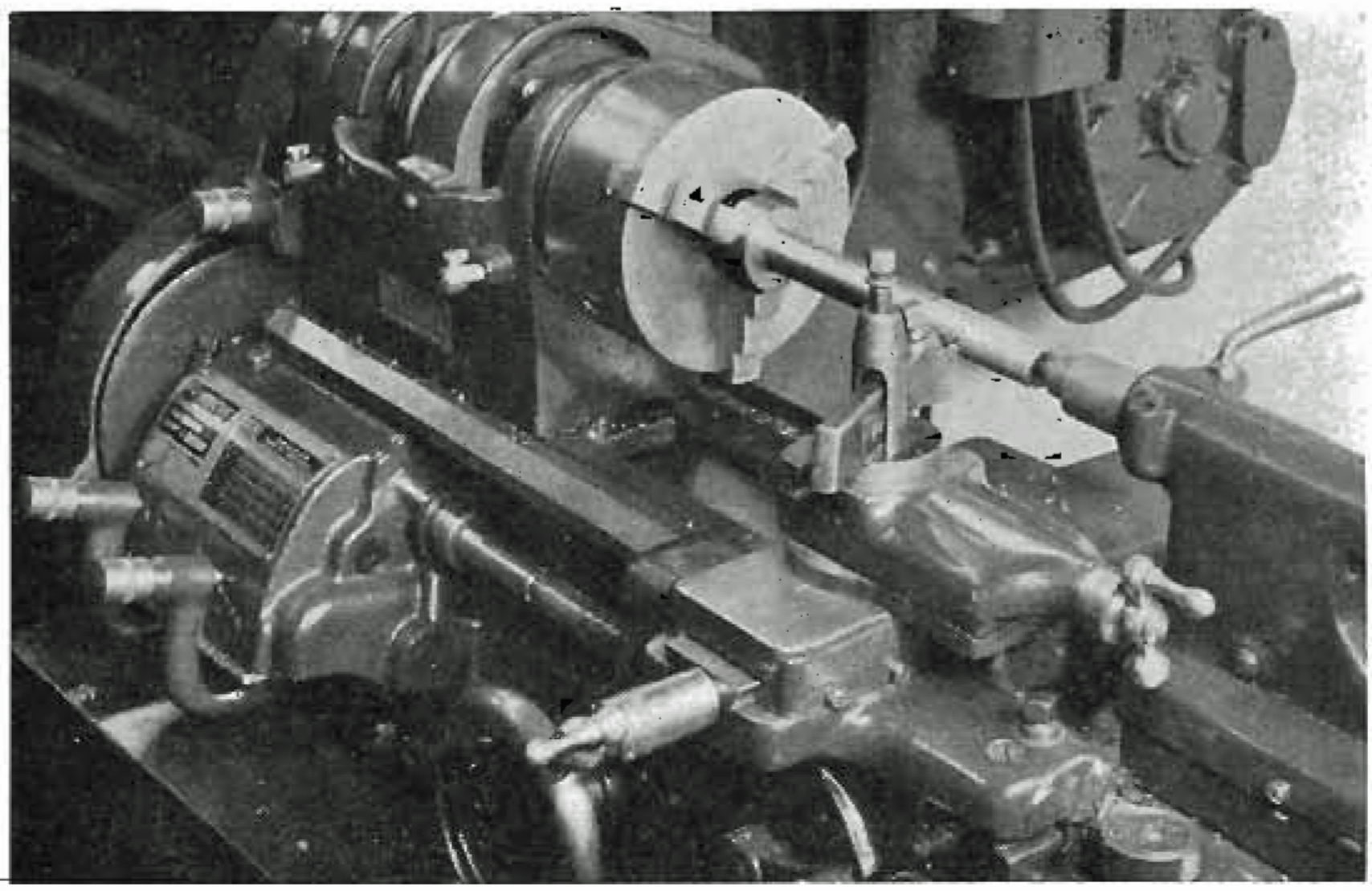

**Fig. 120 Screwing a Bolt in the Lathe**

In this way, the tool is made to generate in the workpiece a thread having a lead equal to the lengthwise movement of the saddle during one revolution of the spindle. This distance is governed by the lead of the leadscrew itself, and its speed of rotation relative to that of the spindle. As the lead of the lathe leadscrew is constant, in case of the Hercus 9″ machine $\frac{1}{8}$″, the lead for the thread required to be cut is obtained by varying the speed ratio between spindle and leadscrew, either through a "quick change" gearbox or by means of "pick off" changewheels.

## Quick Change Gearbox

On model A lathes screw thread leads together with power sliding and surfacing feeds are selected by arranging the tumbler levers of the gearbox, Fig. 121, according to the direct reading index chart. For convenience, screw threads are given in terms of threads per inch based on a single start thread and are shown by the upper of the two figures on the chart, Fig. 122, the lower figure giving rate of power longitudinal feed. Threads ranging from 8 to 224 per inch are obtained directly from the gearbox tumblers, while threads from 4 to 7 per inch are obtained by replacing the 20 tooth stud gear with the 40 tooth gear, as per Fig. 123.

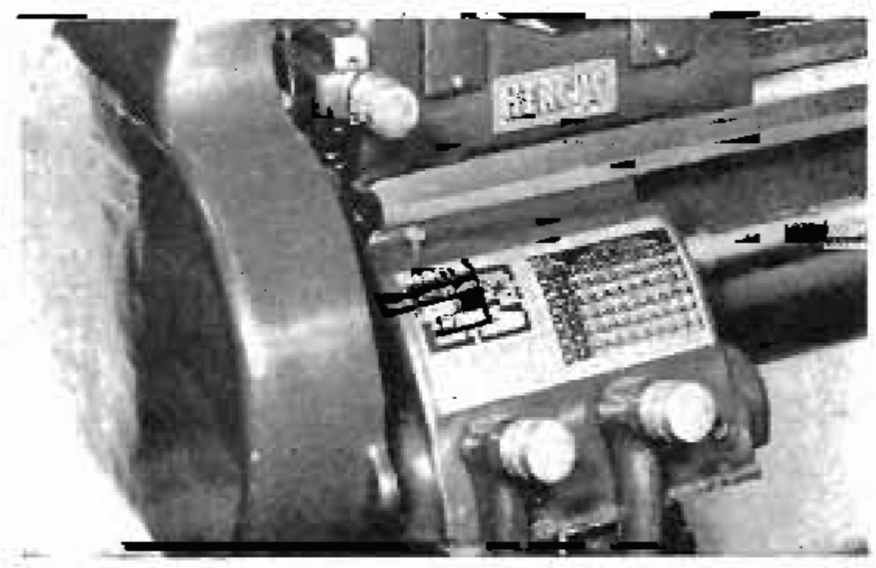

**Fig. 121 Quick Change Gearbox**

## Change Wheels

On model B and C lathes screw thread leads, together with power sliding and for model B lathes, power surfacing feeds are obtained by means of conventional pick off change wheels, a complete set of which are supplied with each machine. The required arrangement of the change wheels is determined by reference to

MADE BY F. W. HERCUS MANUFACTURING CO. LIMITED SOUTHWARK, SOUTH AUST.

9 inch HERCUS
Workshop PRECISION LATHE
MODEL
MACHINE No.

A B C D E Positions

AUTOMATIC CROSS FEEDS
.3 TIMES LONGITUDINAL FEEDS

| STUD GEAR | LEFT HAND TUMBLER | THREADS PER INCH / FEEDS IN THOUSANDS | | | | | | | |
|---|---|---|---|---|---|---|---|---|---|
| 40 | A | 4 .0853 | 4½ .0758 | 4¾ .0721 | 5 .0683 | 5½ .0621 | 6 .0569 | 6½ .0525 | 7 .0488 |
| 20 | A | 8 .0427 | 9 .0379 | 9½ .0361 | 10 .0341 | 11 .0310 | 12 .0284 | 13 .0263 | 14 .0244 |
| 20 | B | 16 .0213 | 18 .0190 | 19 .0180 | 20 .0171 | 22 .0155 | 24 .0142 | 26 .0131 | 28 .0122 |
| 20 | C | 32 .0107 | 36 .0095 | 38 .0090 | 40 .0085 | 44 .0078 | 48 .0071 | 52 .0066 | 56 .0061 |
| 20 | D | 64 .0053 | 72 .0047 | 76 .0045 | 80 .0043 | 88 .0039 | 96 .0036 | 104 .0033 | 112 .0030 |
| 20 | E | 128 .0027 | 144 .0024 | 152 .0023 | 160 .0021 | 176 .0019 | 192 .0018 | 208 .0016 | 224 .0015 |
| | | ↓ | ↓ | ↓ | ↓ | ↓ | ↓ | ↓ | ↓ |

**Fig. 122 Gearbox Index Chart**

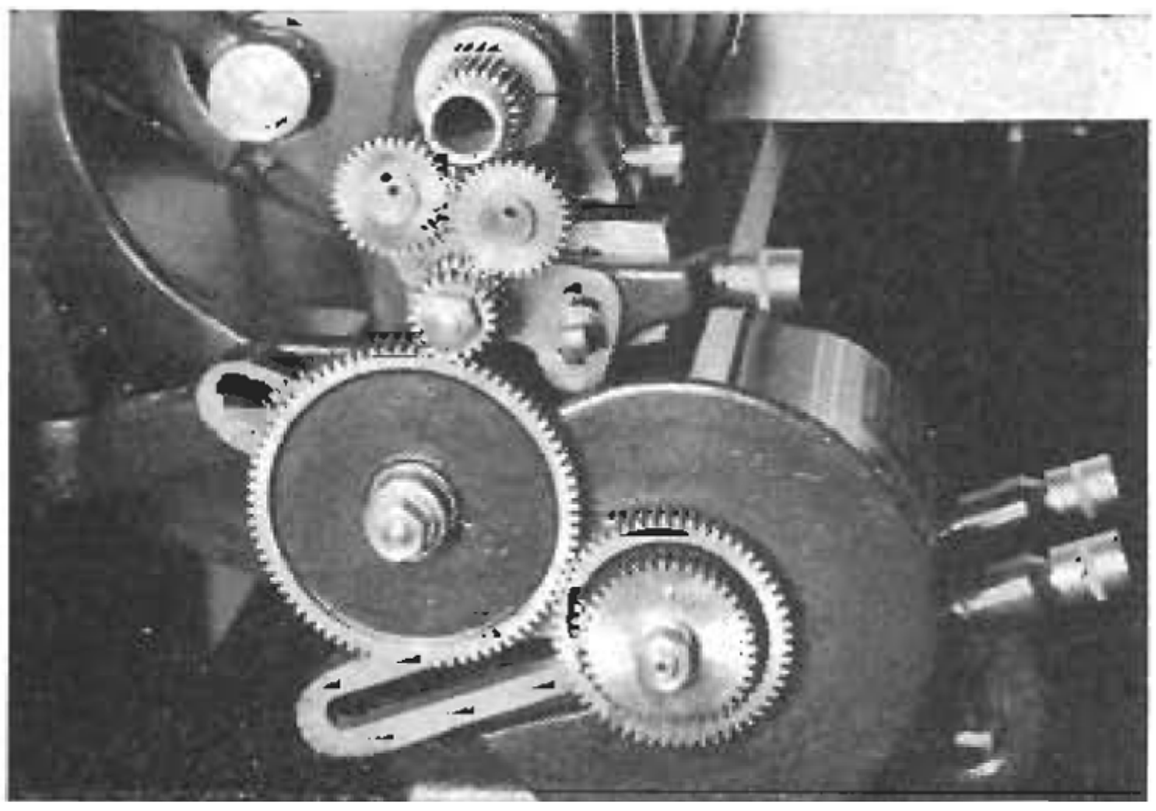

**Fig. 123 Change Gears, Model "A" Lathe**

**Fig. 124 Index Chart Model "B"**

SCREW THREADS AND POWER FEEDS
9" "HERCUS" PRECISION LATHE
MODEL 8. MACHINE No.

| THREADS PER INCH | STUD GEAR | IDLER GEARS | SCREW GEAR | CROSS FEEDS | LONG FEEDS |
|---|---|---|---|---|---|
| 4 | 24 | FIG. 1 | 48 | | |
| 4½ | 24 | FIG. 1 | 54 | | |
| 5 | 16 | FIG. 1 | 40 | | |
| 5½ | 16 | FIG. 1 | 44 | | |
| 6 | 16 | FIG. 1 | 48 | | |
| 6½ | 16 | FIG. 1 | 52 | | |
| 7 | 16 | FIG. 1 | 56 | | |
| 7½ | 16 | FIG. 1 | 60 | | |
| 8 | 32 | FIG. 2 | 32 | | |
| 9 | 32 | FIG. 2 | 36 | | |
| 10 | 32 | FIG. 2 | 40 | | |
| 11 | 32 | FIG. 2 | 44 | | |
| 11½ | 32 | FIG. 2 | 46 | | |
| 12 | 32 | FIG. 2 | 48 | | |
| 13 | 32 | FIG. 2 | 52 | | |
| 14 | 32 | FIG. 2 | 56 | | |
| 16 | 24 | FIG. 2 | 48 | | |
| 18 | 24 | FIG. 2 | 54 | | |
| 19 | 24 | FIG. 2 | 57 | | |
| 20 | 16 | FIG. 2 | 40 | | |
| 22 | 16 | FIG. 2 | 44 | .0046 | .0155 |
| 24 | 16 | FIG. 2 | 48 | .0042 | .0142 |
| 26 | 16 | FIG. 2 | 52 | .0039 | .0131 |
| 27 | 16 | FIG. 2 | 54 | .0037 | .0126 |
| 28 | 16 | FIG. 2 | 56 | .0036 | .0122 |
| 30 | 16 | FIG. 2 | 60 | .0034 | .0114 |
| 32 | 32 | FIG. 3 | 32 | .0031 | .0107 |
| 36 | 32 | FIG. 3 | 36 | .0028 | .0095 |
| 40 | 32 | FIG. 3 | 40 | .0025 | .0083 |
| 44 | 32 | FIG. 3 | 44 | .0023 | .0078 |
| 46 | 32 | FIG. 3 | 46 | .0022 | .0074 |
| 48 | 32 | FIG. 3 | 48 | .0021 | .0071 |
| 52 | 32 | FIG. 3 | 52 | .0019 | .0066 |
| 54 | 32 | FIG. 3 | 54 | .0019 | .0063 |
| 56 | 32 | FIG. 3 | 56 | .0018 | .0061 |
| 60 | 32 | FIG. 3 | 60 | .0017 | .0057 |
| 64 | 16 | FIG. 3 | 32 | .0016 | .0053 |
| 72 | 16 | FIG. 3 | 36 | .0014 | .0047 |
| 80 | 16 | FIG. 3 | 40 | .0013 | .0043 |
| 88 | 16 | FIG. 3 | 44 | .0011 | .0039 |
| 92 | 16 | FIG. 3 | 46 | .0011 | .0037 |
| 96 | 16 | FIG. 3 | 48 | .0010 | .0036 |
| 104 | 16 | FIG. 3 | 52 | .0010 | .0033 |
| 112 | 16 | FIG. 3 | 56 | | .0030 |
| 120 | 16 | FIG. 3 | 60 | | .0028 |
| 160 | 16 | FIG. 4 | 80 | | .0021 |

AUTOMATIC POWER FEEDS THROUGH FRICTION CLUTCH IN INCHES PER REVOLUTION OF HEADSTOCK SPINDLE.

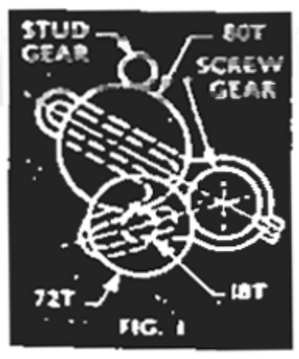

FIG. 1

FIG. 2

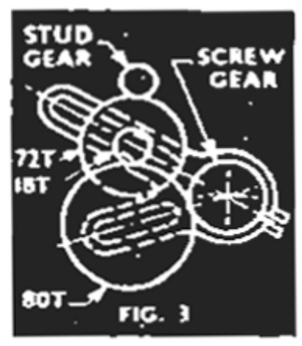

FIG. 3

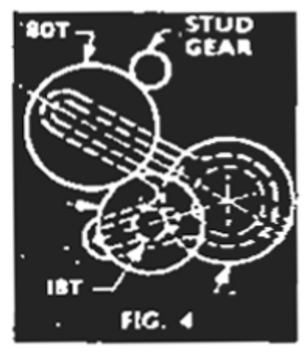

FIG. 4

F. W. HERCUS MANUFACTURING CO. LIMITED
SOUTHWARK SOUTH AUSTRALIA

**Fig. 125 Index Chart Model "C"**

SCREW THREADS AND POWER FEEDS
9" "HERCUS" WORKSHOP PRECISION LATHE
MODEL MACHINE No.

| THREADS PER INCH | STUD GEAR | IDLER GEARS | SCREW GEAR | FEEDS PER REV. |
|---|---|---|---|---|
| 4 | 24 | FIG. 1 | 48 | |
| 4½ | 24 | FIG. 1 | 54 | |
| 5 | 16 | FIG. 1 | 40 | |
| 5½ | 16 | FIG. 1 | 44 | |
| 6 | 16 | FIG. 1 | 48 | |
| 6½ | 16 | FIG. 1 | 52 | |
| 7 | 16 | FIG. 1 | 56 | |
| 7½ | 16 | FIG. 1 | 60 | |
| 8 | 32 | FIG. 2 | 32 | |
| 9 | 32 | FIG. 2 | 36 | |
| 10 | 32 | FIG. 2 | 40 | |
| 11 | 32 | FIG. 2 | 44 | |
| 11½ | 32 | FIG. 2 | 46 | |
| 12 | 32 | FIG. 2 | 48 | |
| 13 | 32 | FIG. 2 | 52 | |
| 14 | 32 | FIG. 2 | 56 | |
| 16 | 24 | FIG. 2 | 48 | |
| 18 | 24 | FIG. 2 | 54 | |
| 19 | 24 | FIG. 2 | 57 | |
| 20 | 16 | FIG. 2 | 40 | |
| 22 | 16 | FIG. 2 | 44 | |
| 24 | 16 | FIG. 2 | 48 | |
| 26 | 16 | FIG. 2 | 52 | |
| 27 | 16 | FIG. 2 | 54 | |
| 28 | 16 | FIG. 2 | 56 | |
| 30 | 16 | FIG. 2 | 60 | |
| 32 | 32 | FIG. 3 | 32 | |
| 36 | 32 | FIG. 3 | 36 | |
| 40 | 32 | FIG. 3 | 40 | |
| 44 | 32 | FIG. 3 | 44 | |
| 46 | 32 | FIG. 3 | 46 | |
| 48 | 32 | FIG. 3 | 48 | |
| 52 | 32 | FIG. 3 | 52 | |
| 54 | 32 | FIG. 3 | 54 | |
| 56 | 32 | FIG. 3 | 56 | |
| 60 | 32 | FIG. 3 | 60 | |
| 64 | 16 | FIG. 3 | 32 | .0156 |
| 72 | 16 | FIG. 3 | 36 | .0138 |
| 80 | 16 | FIG. 3 | 40 | .0125 |
| 88 | 16 | FIG. 3 | 44 | .0113 |
| 92 | 16 | FIG. 3 | 46 | .0108 |
| 96 | 16 | FIG. 3 | 48 | .0104 |
| 104 | 16 | FIG. 3 | 52 | .0096 |
| 112 | 16 | FIG. 3 | 56 | .0089 |
| | 16 | FIG. 3 | 60 | .0083 |
| | 48 | FIG. 4 | 80 | .0062 |
| | 40 | FIG. 4 | 80 | .0052 |
| | 32 | FIG. 4 | 80 | .0041 |
| | 24 | FIG. 4 | 80 | .0031 |
| | 16 | FIG. 4 | 80 | .0021 |

LONGITUDINAL POWER SCREW FEED IN INCHES PER SPINDLE REVOLUTION

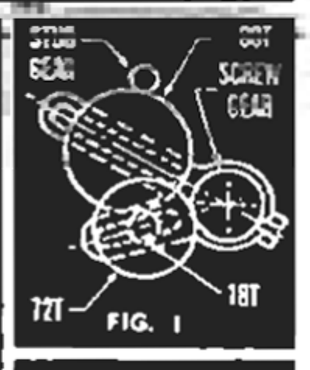

FIG. 1

FIG. 2

FIG. 3

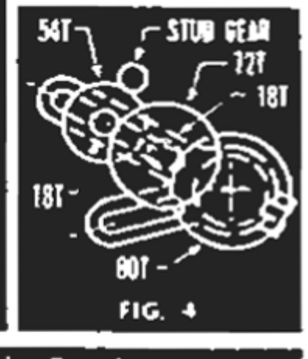

FIG. 4

F. W. HERCUS MANUFACTURING CO. LIMITED
SOUTHWARK SOUTH AUSTRALIA

the index chart attached to the lathe, Figs. 124 and 125. Here also screw threads are given in terms of threads per inch based on a single start thread. Fig. 126 shows a typical change wheel set-up for cutting screw threads on a model B or C lathe. The gears should be set to allow a small amount of backlash between the teeth and kept lightly oiled when in use.

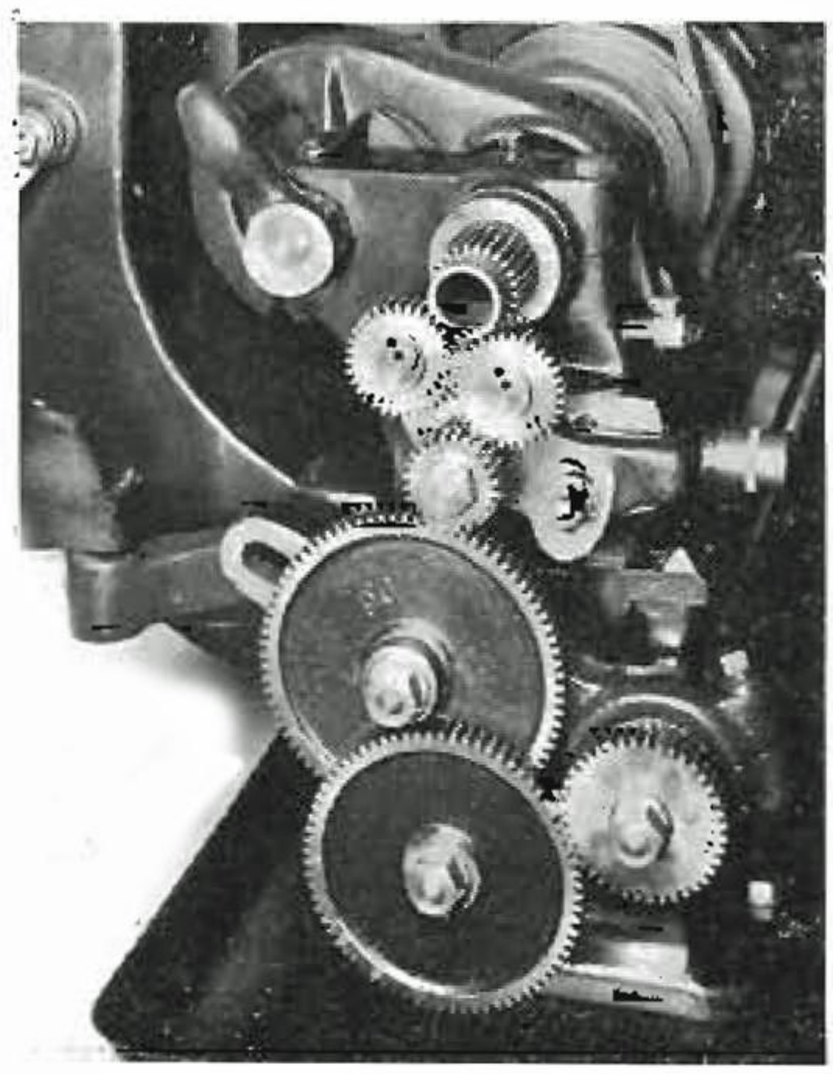

**Fig. 126 Typical Change Wheel Train**

## Position of Spacing Collar

For change gear set-ups involving simple gearing (Fig. 2 on chart), the spacing collar is placed outside of the screw gear, as per Fig. 127. Where compound gearing is used (Figs. 1, 3 and 4 on chart), this collar is placed inside the screw gear, as per Fig. 128.

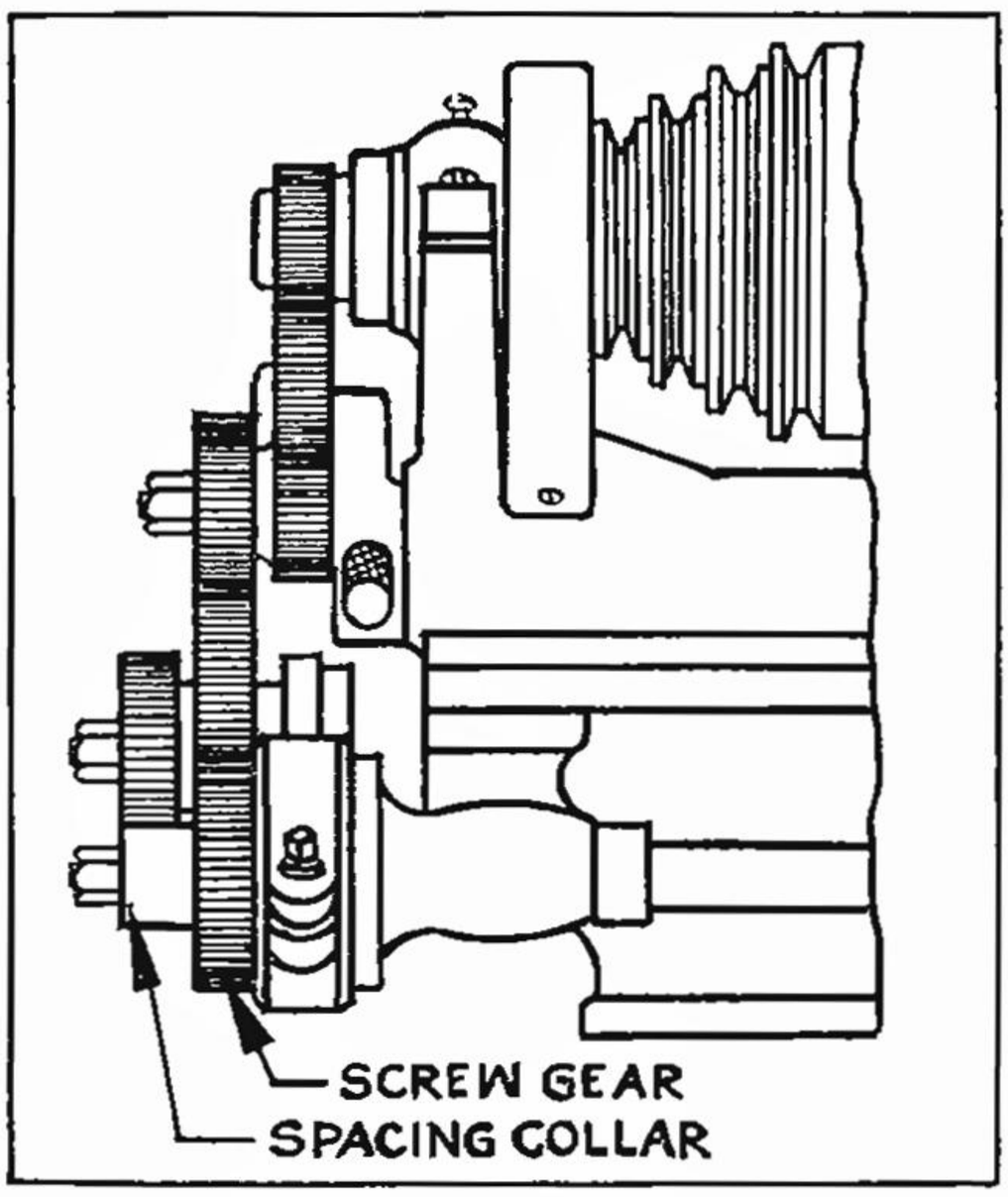


**Fig. 127 Position of spacing Collar for Simple Gearing**

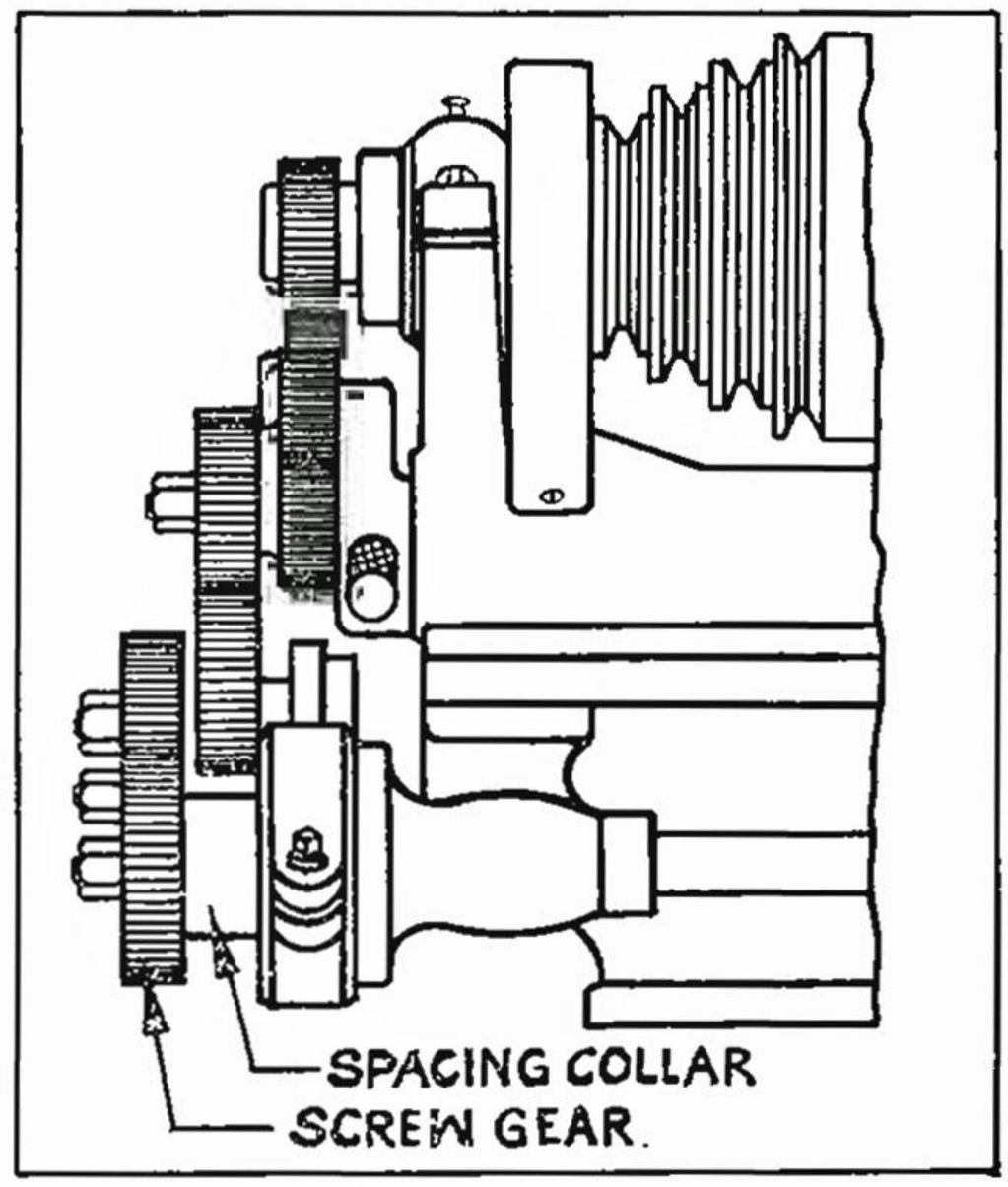


**Fig. 128 Position of spacing Collar for Compound Gearing**

## Tools for Screwcutting

The form of the thread to be cut is determined by the shape of the cutting tool, and so it is essential that this should be ground carefully and set properly. The correct angle for the tool point is obtained by grinding it to suit a screwing tool gauge, Fig. 129, which is also used to set the tool square with the work, as per Fig. 130. As mentioned on page 18 a screwing tool should always be ground flat on top and set exactly at centre height, as it is only under these conditions that it will reproduce its own form in the thread to be cut.

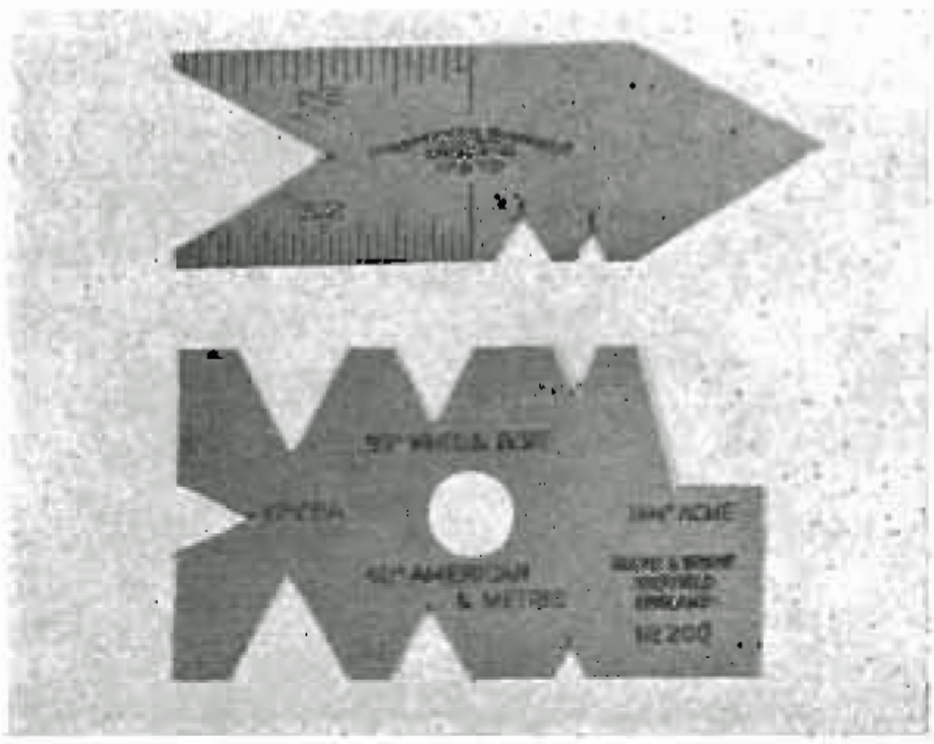

Fig. 129 Screwing Tool Gauges

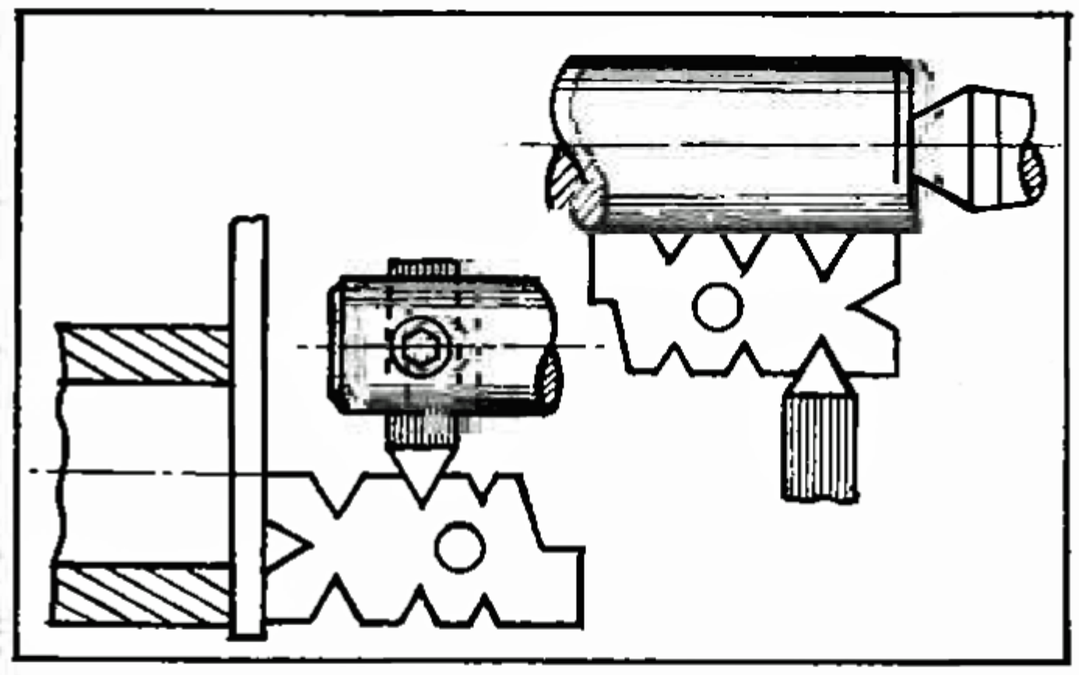

Fig. 130 Setting the Tool Point Square with the work

With threads of comparatively short lead and large diameter and having therefore a small helix angle, the effect of the helix angle on the side clearance of the tool may be ignored. Where the helix angle is large however, increased side clearance must be allowed on the leading edge of the tool and reduced clearance on the following edge. Fig. 131 illustrates how a tool with sufficient clearance for a thread of small helix angle "A" has insufficient clearance for a thread with greater helix angle "B".

For the majority of commercial screw threads the exact dimensions of the radii or flats of the root and crest are not critical. The root radius is generally formed by grinding or honing on the tool point a radius slightly smaller than that theoretically required. The radius on the crest of a Whitworth thread may be satisfactorily obtained by rounding with a file after the thread has been cut to full depth.

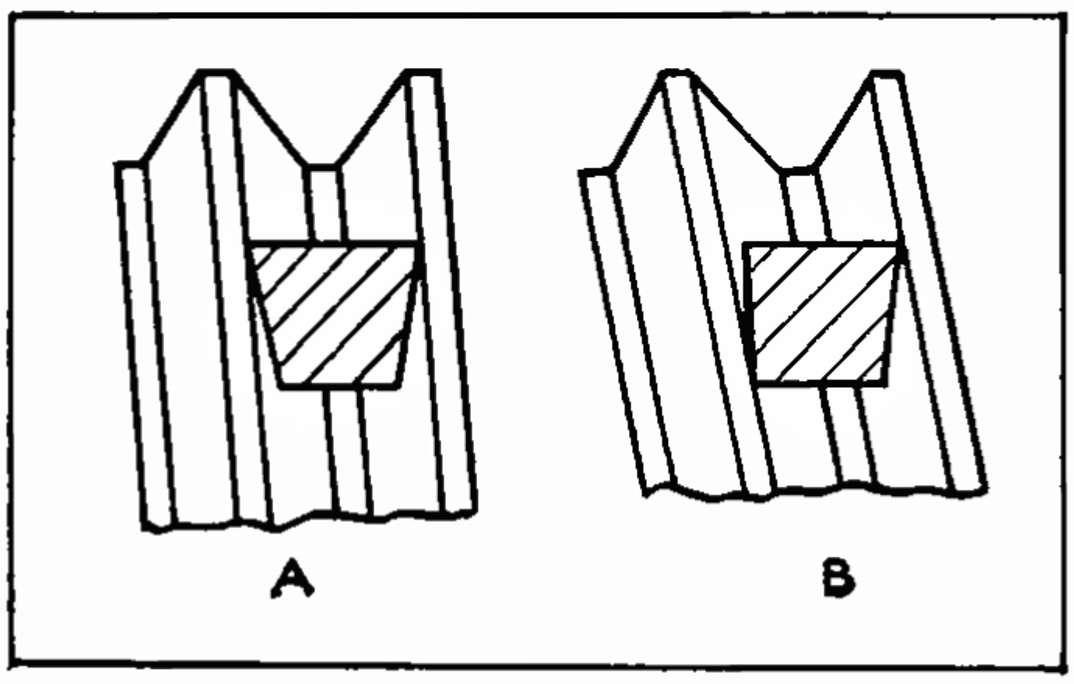


Fig. 131 Effect of Helix Angle on side Clearance

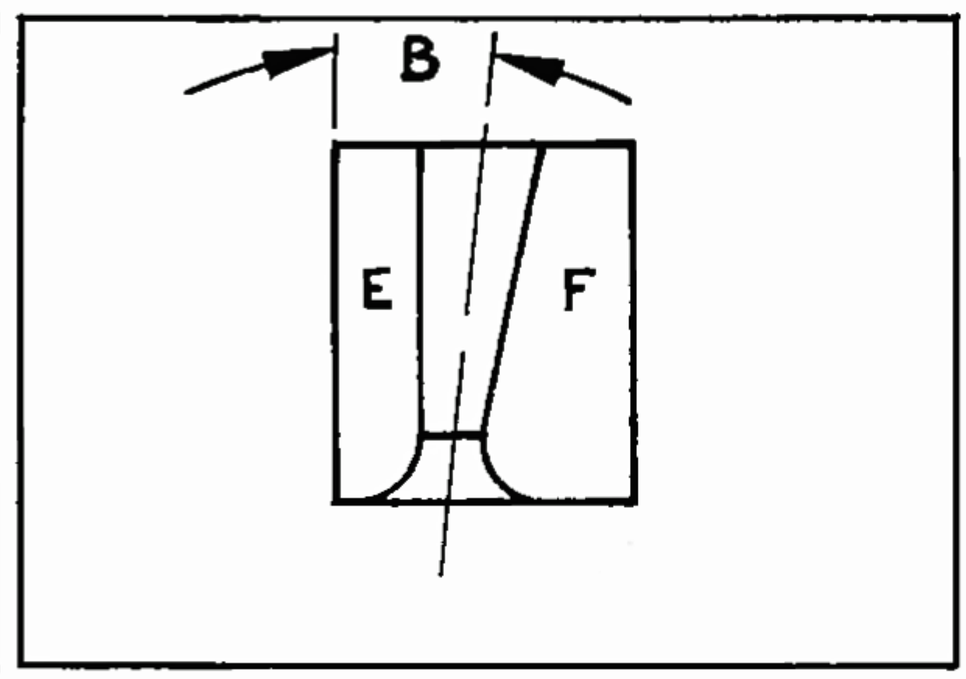


Fig. 132 Tool for Square Threads

## Tool for Square Threads

A tool suitable for cutting square threads is illustrated in Fig. 132. This tool is ground at an angle "B" to conform to the helix angle of the thread, while clearance is provided on the sides at E and F.

For large square threads of coarse pitch the tool is ground slightly narrower than the width of the required groove, which is afterwards opened out to its correct width by side cutting.

## Screw Cutting Operations

The piece to be threaded must first be turned to the major diameter of the thread to be cut, after which the screwcutting tool is mounted in the lathe, advanced until it just touches the work and the graduated collar set at zero. The tool should then be withdrawn clear of the work and the saddle moved back and forth by hand to ensure that it has unrestricted movement for the whole length of the cut. The tool may then be advanced again to the zero reading of the cross slide, at which point it should be just touching the work, the lathe started, the half-nuts engaged with the leadscrew and a light trial cut taken. At the end of the cut the tool must be smartly withdrawn by a backward movement of the cross slide and the half-nuts disengaged. The saddle is then wound back to the starting point by hand and the tool re-set for the next cut. This procedure is progressively repeated until the thread is completed to correct depth.

Screwcutting is usually carried out at a comparatively slow speed owing to the difficulty of withdrawing the tool at the correct point at higher speeds. Where the nature of the work is such as to allow of a run out groove being turned at the end of the thread, Fig. 133, it is possible to use considerably higher speeds.

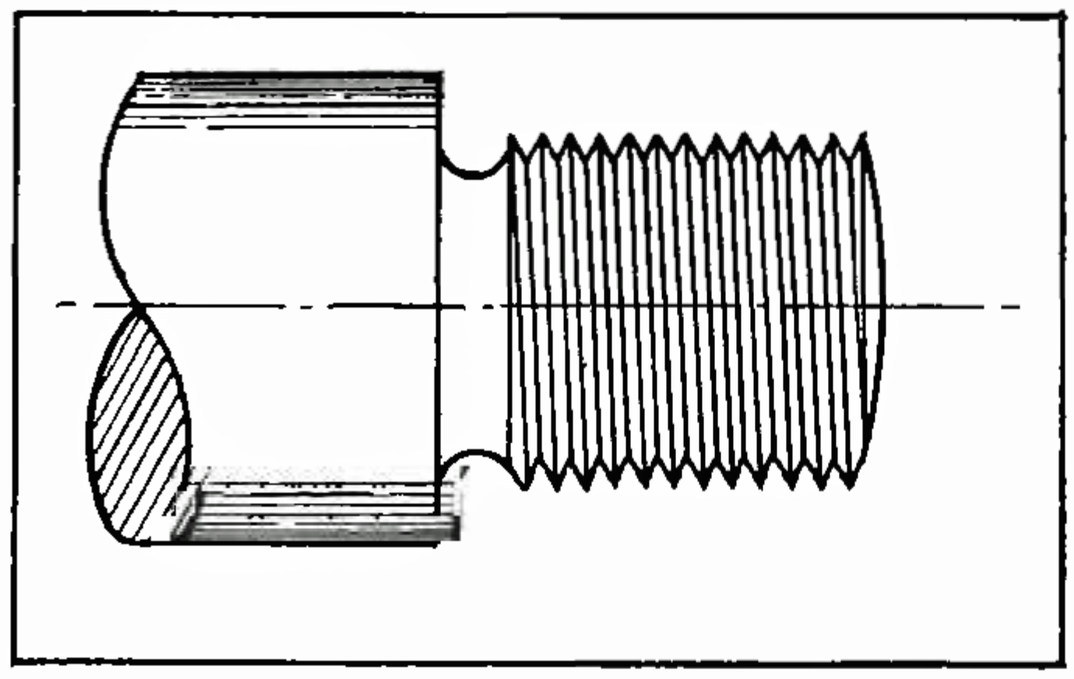

**Fig. 133 Run out Groove at end of Thread**

The depth of cut which may be taken while roughing out a thread will vary according to the pitch of the thread, and the material being screwed, and may range from .003 to .020. This should be decreased as the finished depth is approached and the final cut taken without advancing the tool at all.

When roughing out larger threads, 12 T.P.I. or coarser, it is advisable to advance the tool sideways slightly by means of the compound rest on each successive cut. This side movement causes the tool to take the bulk of the cut on its leading edge only, thus considerably reducing the strain on the cutting tool and allowing deeper cuts to be taken without risk of chatter or breakage. Side movement of the tool for 55° or 60° threads should not exceed 2/5ths of the inward movement. This process should be stopped before the full depth is reached and the thread finished with light undisturbed cuts.

## Picking up the Cut

In cases where the number of threads per inch required to be cut is an exact multiple of the number in the leadscrew, the half-nuts may be engaged in any position without disturbing the phase relationship between the paths of the tool on successive cuts. When, however, it is required to cut a number of threads per inch, not an exact

**Fig. 134 Chasing Dial**

multiple of the number in the leadscrew, it is necessary to ensure that the spindle, leadscrew, and lathe carriage are in correct relationship to each other before the half-nuts are engaged. This is accomplished by means of the chasing dial, Fig. 134.
The chasing dial indicates the relative positions of the spindle, leadscrew and lathe carriage, and consequently shows the correct positions for engagement of the half-nuts.

Rules for using the chasing dial of the "Hercus" 9" swing lathe are as follows:

For numbers of threads divisible by 8 the half-nuts may be closed in any position without regard to the position of the dial face.
For numbers of threads divisible by 2 the half-nuts may be closed at any line on the dial.
For all whole numbers of threads per inch the half-nuts may be closed at any numbered line on the dial.
For threads involving one-half of a thread per inch the half-nuts may be closed at any two opposite lines, i.e., 1 and 3 or 2 and 4.
For threads involving one-quarter of a thread per inch the half-nuts must always be closed at the same, one line on the dial.
When screwing threads involving fractions other than one-half or one-quarter it is advisable not to open the half-nuts at all but to run the lathe in reverse to return the saddle to its starting point for each successive cut.

## Internal Threads

The screwing of internal threads is carried out in much the same way as for external threads. The provision of a run out groove, Fig. 135, if possible, is extremely desirable for internal threads except where the thread can be run right through the work. Chamfering the front of the hole, as illustrated, to the approximate major diameter can also be of assistance in screwing internal threads.

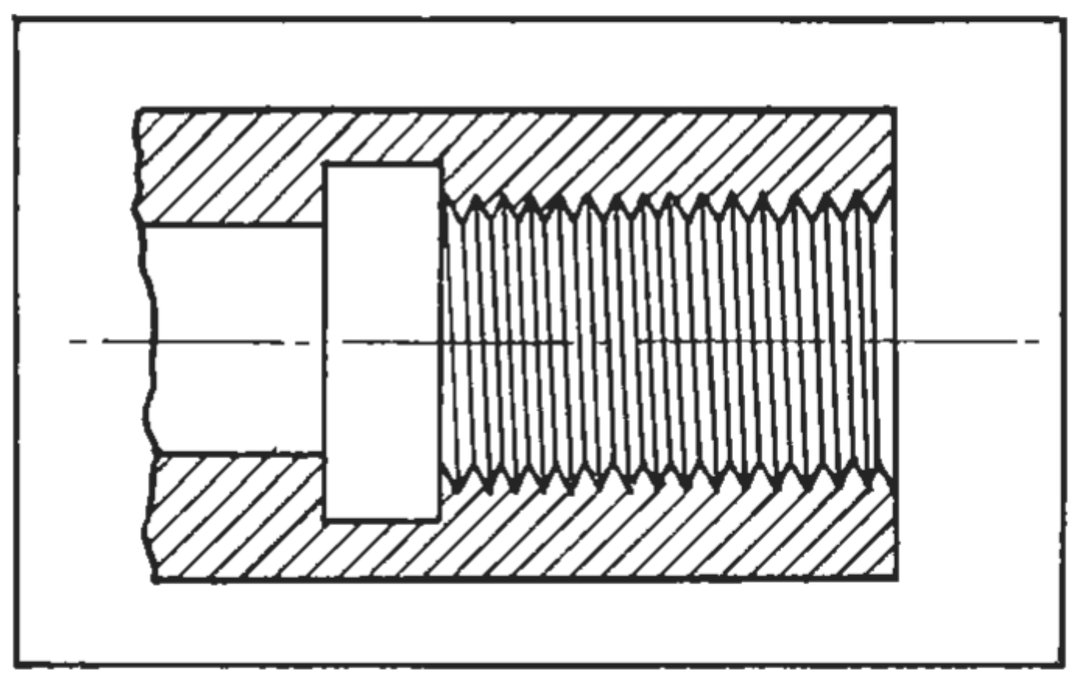

**Fig. 135 Run out Groove for Internal Thread**

In preparing the work for internal screwcutting it is usual to bore the hole to a size slightly greater than the theoretical minor diameter of the thread to be cut. This greatly simplifies the fitting of the internal thread to its mating part and does not detract from the strength. It has been found by experiment that the depth of an internal thread may be reduced in this manner by up to 25% without its strength being impaired.

## Left Hand Threads

Left-hand threads are used for the tailstock and cross-feed screws of a lathe, on the left-hand end of axles and machine spindles, on one end of a turnbuckle and other similar applications. The lathe is set up and operated in the same manner as for right-hand threads, except that it must be arranged to feed the tool from left to

right instead of from right to left. Side movement of the cutting tool during roughing out of left-hand threads is made towards the tailstock instead of towards the headstock as with right-hand threads, and to suit the opposite helix angle tools must be ground with reversed clearances.

## Multiple Start Threads

Multiple start screws are used where it is desired to increase the lead of a screw without a corresponding increase in the pitch or depth of thread, and consist of a thread having two or more helicies side by side.

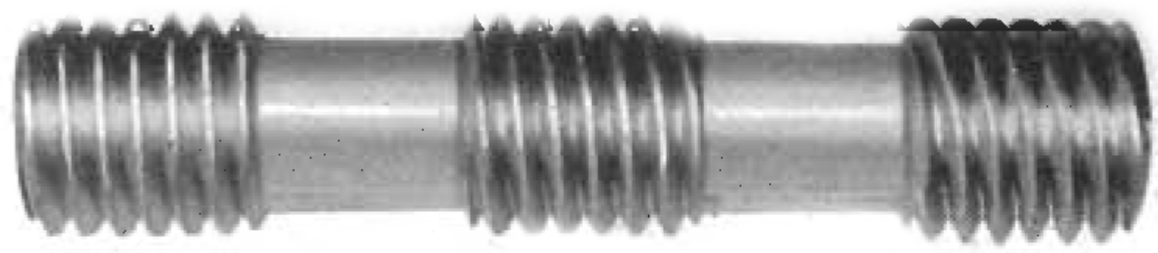

**Fig. 136 Single, Double and Triple Start Threads**

In screwing multi-start threads the critical factor is the accurate spacing of the starts, and this is best achieved either by means of the chasing dial or by what is known as "slipping the change gears".

The use of the chasing dial for spacing of multi-start threads is limited to threads having a lead which will permit the half-nuts being closed only at points displaced from each other by a number of positions which is a multiple of the number of starts in the thread to be cut. Hence a two start thread having a lead which permitted the closing of the half-nuts at any numbered line on the dial face could be spaced by closing the half-nuts alternately on numbered and un-numbered lines.

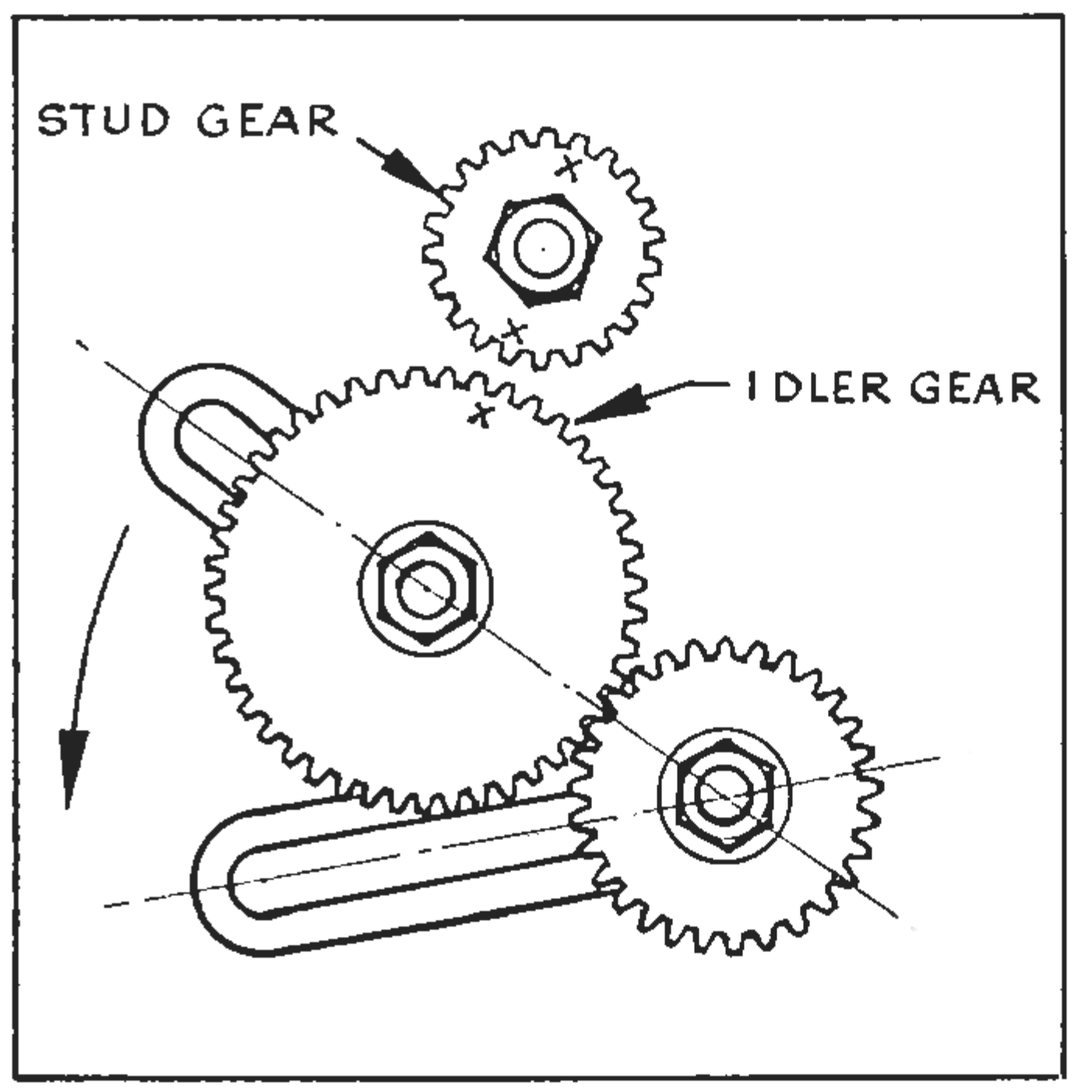


**Fig. 137 Spacing a Two Start Thread by slipping the Change Gears**

Where the lead of the thread will not permit the spacing of the starts by means of the chasing dial this may be accomplished by "slipping the change gears". For this method of spacing, the change gear train must be calculated so as to have a stud gear with a number of teeth an exact multiple of the required number of starts. Spacing of the starts may then be

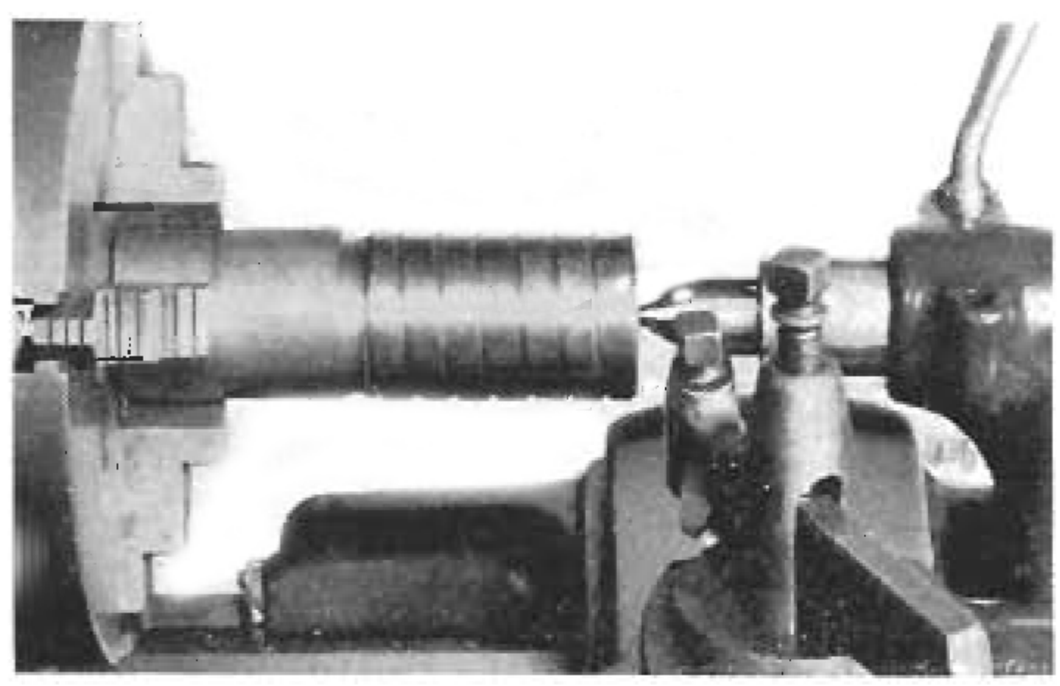

**Fig. 138 Initial Stage in cutting a Three Start Thread**

achieved by dropping the change gear bracket, as shown by the arrow in Fig. 137, until the stud gear is disengaged from the rest of the gear train, rotating the stud gear by the number of teeth which will give the required fraction of a turn and raising the change gear bracket until the teeth are again in mesh. In doing this care must be taken to see that the stud gear, in its new position, engages in the same tooth space in the idler gear.

When threads are spaced by this method it is necessary to cut each start to its full depth before moving to the next. Fig. 138 illustrates a three start thread prior to slipping the change gears for the second start.

## Metric Threads

By means of a set of transposing gears all models of "Hercus" lathes can be used to cut metric pitch threads. These transposing gears are not included with the lathe as standard equipment, but can be supplied as extras together with index charts, Fig. 139, showing the correct arrangement of the gears.

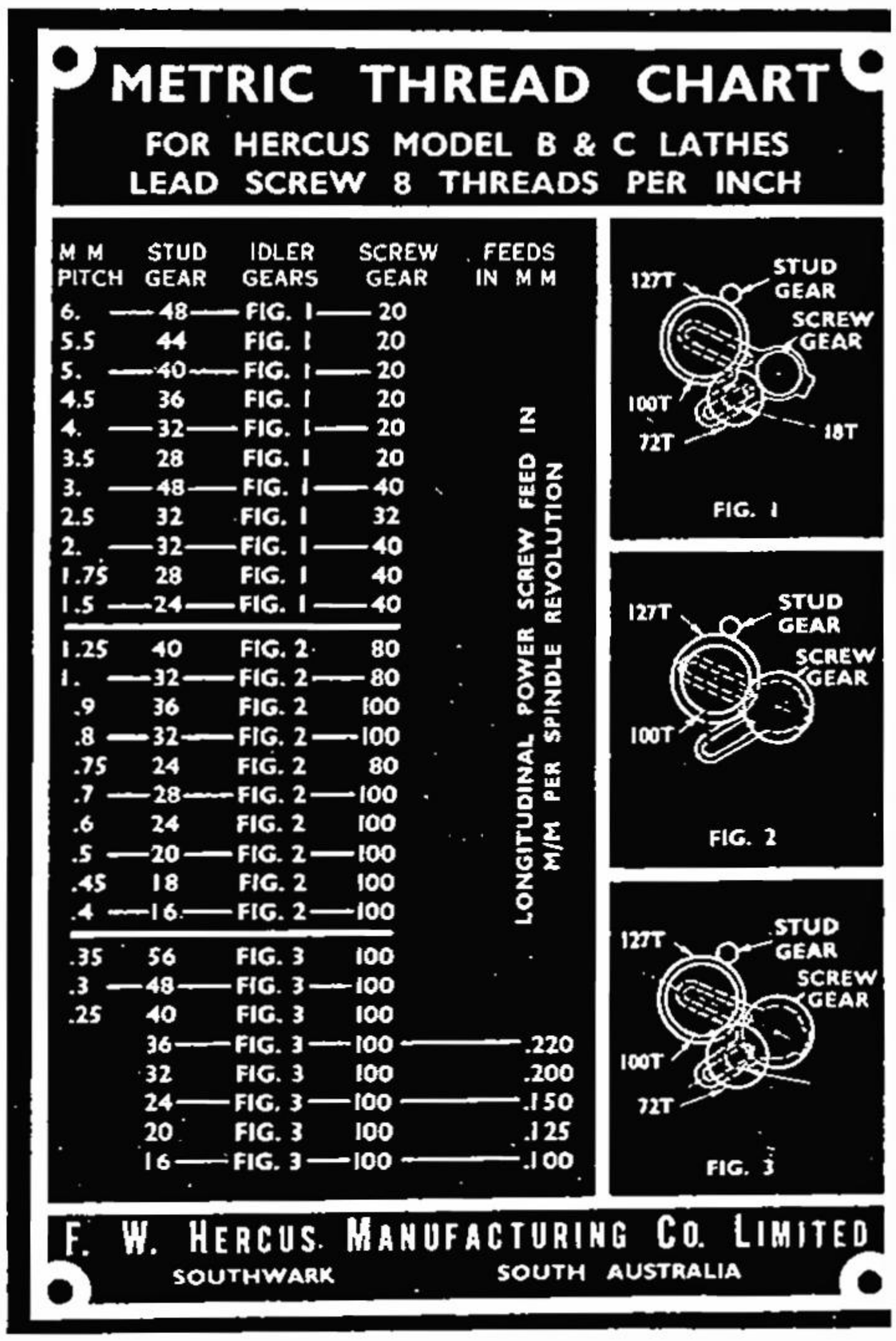

METRIC THREAD CHART
FOR HERCUS MODEL B & C LATHES
LEAD SCREW 8 THREADS PER INCH

| M M PITCH | STUD GEAR | IDLER GEARS | SCREW GEAR | FEEDS IN M M |
|---|---|---|---|---|
| 6. | 48 | FIG. 1 | 20 | |
| 5.5 | 44 | FIG. 1 | 20 | |
| 5. | 40 | FIG. 1 | 20 | |
| 4.5 | 36 | FIG. 1 | 20 | |
| 4. | 32 | FIG. 1 | 20 | |
| 3.5 | 28 | FIG. 1 | 20 | |
| 3. | 48 | FIG. 1 | 40 | |
| 2.5 | 32 | FIG. 1 | 32 | |
| 2. | 32 | FIG. 1 | 40 | |
| 1.75 | 28 | FIG. 1 | 40 | |
| 1.5 | 24 | FIG. 1 | 40 | |
| 1.25 | 40 | FIG. 2 | 80 | |
| 1. | 32 | FIG. 2 | 80 | |
| .9 | 36 | FIG. 2 | 100 | |
| .8 | 32 | FIG. 2 | 100 | |
| .75 | 24 | FIG. 2 | 80 | |
| .7 | 28 | FIG. 2 | 100 | |
| .6 | 24 | FIG. 2 | 100 | |
| .5 | 20 | FIG. 2 | 100 | |
| .45 | 18 | FIG. 2 | 100 | |
| .4 | 16 | FIG. 2 | 100 | |
| .35 | 56 | FIG. 3 | 100 | |
| .3 | 48 | FIG. 3 | 100 | |
| .25 | 40 | FIG. 3 | 100 | |
| | 36 | FIG. 3 | 100 | .220 |
| | 32 | FIG. 3 | 100 | .200 |
| | 24 | FIG. 3 | 100 | .150 |
| | 20 | FIG. 3 | 100 | .125 |
| | 16 | FIG. 3 | 100 | .100 |

LONGITUDINAL POWER SCREW FEED IN M/M PER SPINDLE REVOLUTION



F. W. HERCUS MANUFACTURING CO. LIMITED
SOUTHWARK SOUTH AUSTRALIA

METRIC THREAD CHART
FOR HERCUS MODEL A LATHE
LEAD SCREW 8 THREADS PER INCH

| MM PITCH | GEAR LEVER POSITIONS | STUD GEAR | COMPOUND GEAR | | SCREW GEAR |
|---|---|---|---|---|---|
| 6. | 8 | 48 | 127 | 100 | 56 |
| 5.5 | 8 | 44 | 127 | 100 | 56 |
| 5. | 8 | 40 | 127 | 100 | 56 |
| 4.5 | 8 | 36 | 127 | 100 | 56 |
| 4. | 10 | 40 | 127 | 100 | 56 |
| 3.5 | 8 | 28 | 127 | 100 | 56 |
| 3. | 16 | 48 | 127 | 100 | 56 |
| 2.75 | 16 | 44 | 127 | 100 | 56 |
| 2.5 | 16 | 40 | 127 | 100 | 56 |
| 2.25 | 16 | 36 | 127 | 100 | 56 |
| 2. | 20 | 40 | 127 | 100 | 56 |
| 1.75 | 16 | 28 | 127 | 100 | 56 |
| 1.5 | 32 | 48 | 127 | 100 | 56 |
| 1.25 | 32 | 40 | 127 | 100 | 56 |
| 1. | 40 | 40 | 127 | 100 | 56 |
| .9 | 40 | 36 | 127 | 100 | 56 |
| .8 | 40 | 32 | 127 | 100 | 56 |
| .75 | 64 | 48 | 127 | 100 | 56 |
| .7 | 40 | 28 | 127 | 100 | 56 |
| .6 | 80 | 48 | 127 | 100 | 56 |
| .5 | 80 | 40 | 127 | 100 | 56 |
| .45 | 80 | 36 | 127 | 100 | 56 |
| .4 | 80 | 32 | 127 | 100 | 56 |

F. W. HERCUS MFG. CO. LIMITED
SOUTHWARK SOUTH AUSTRALIA

**Fig. 139 Index Charts for Metric Pitch Threads**

When cutting metric threads the chasing dial should not be used, the lathe being instead run in reverse to return the saddle to its starting point for each successive cut without disengaging the half-nuts at all.

For further information on metric lathes see page 74.

## Special Pitch Threads

Threads other than those shown on the index charts can be cut with the use of additional change wheels. These can always be supplied to order and to suit the particular thread desired.

## Tapping Threads

Fig. 140 shows how a tap can be used in the lathe. The lathe is operated at a slow speed and the tap is fed to the work either by means of the tailstock screw or by sliding the tailstock along the bed. This method is frequently employed for finishing a thread which has been screwed to slightly less than its finished size.

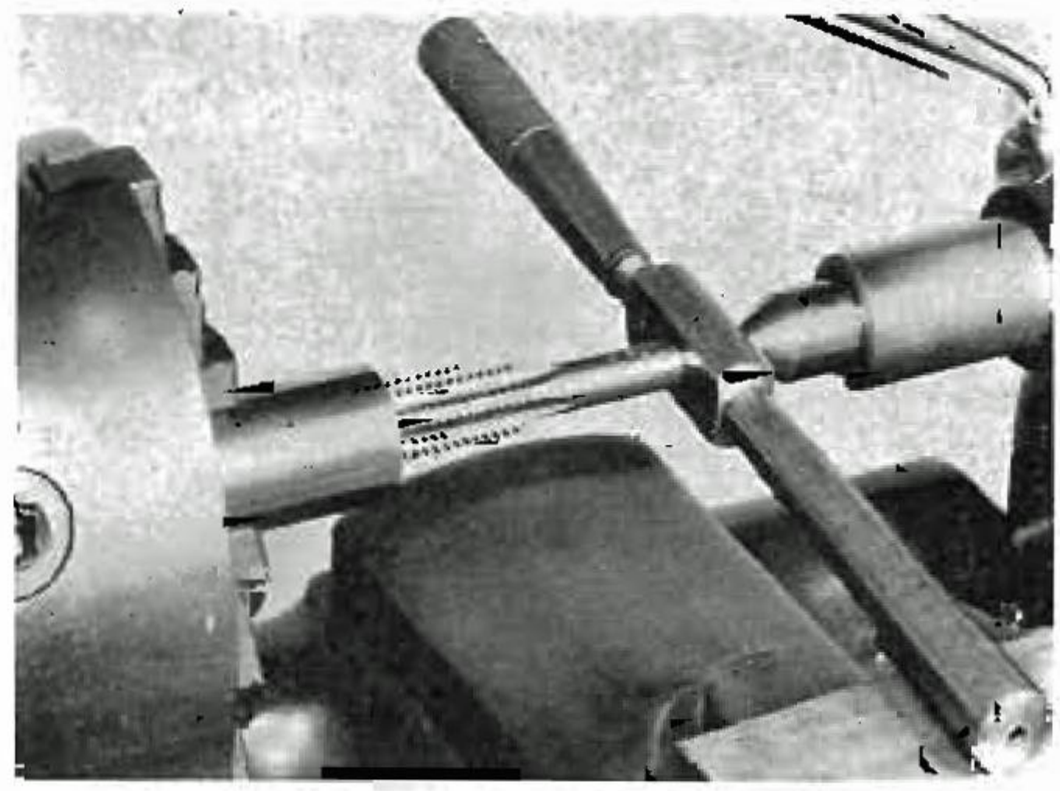

**Fig. 140 Tapping in the Lathe**

## Cutting Threads with Die in Tailstock

Fig. 141 illustrates a die mounted in a dieholder in the lathe tailstock for cutting screw threads. Here again the die may be fed to the work either by means of the tailstock screw or by sliding the tailstock along the bed.

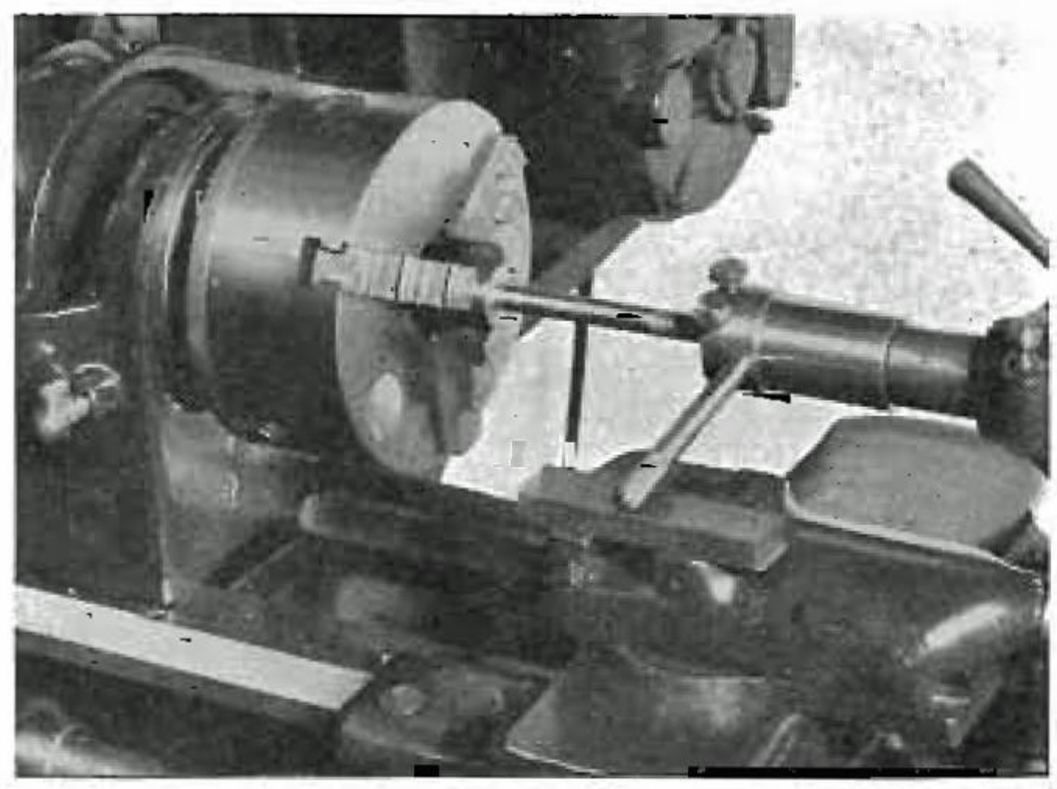

**Fig. 141 Cutting a Thread with Die-holder in the Tailstock**

## Measuring Screw Threads

There are several methods of measuring the pitch diameter of screw threads, and that adopted will depend on the type of thread and the equipment available.

## Thread Gauges

For production work, roller thread gauges of the "go – no go" type are frequently used, the principle of these being the same as the snap gauge used for checking plain diameters, see Chapter Three. Likewise, screw plug gauges are used for checking internal threads.

## Screw Thread Micrometers

Pitch diameter may be accurately measured by means of special screw thread micrometers. The fixed anvil of these micrometers is V-shaped to fit over the thread, bearing on the flanks, while the moving anvil is cone-shaped to enable it to enter the space between the threads and bear on the flanks. To cover the whole range of standard pitches a set of several micrometers is required for each thread form.

## Measuring by Three Wire Method

The most universal method of measuring pitch diameter is by taking a measurement over three equal wires with a standard outside micrometer. Two wires are placed in contact with the thread on one side, and the third diametrically opposite, as shown in Fig. 142. Procedures and formulae for measuring by this method are set out below. First the optimum wire size is calculated as follows: Where p = Pitch.

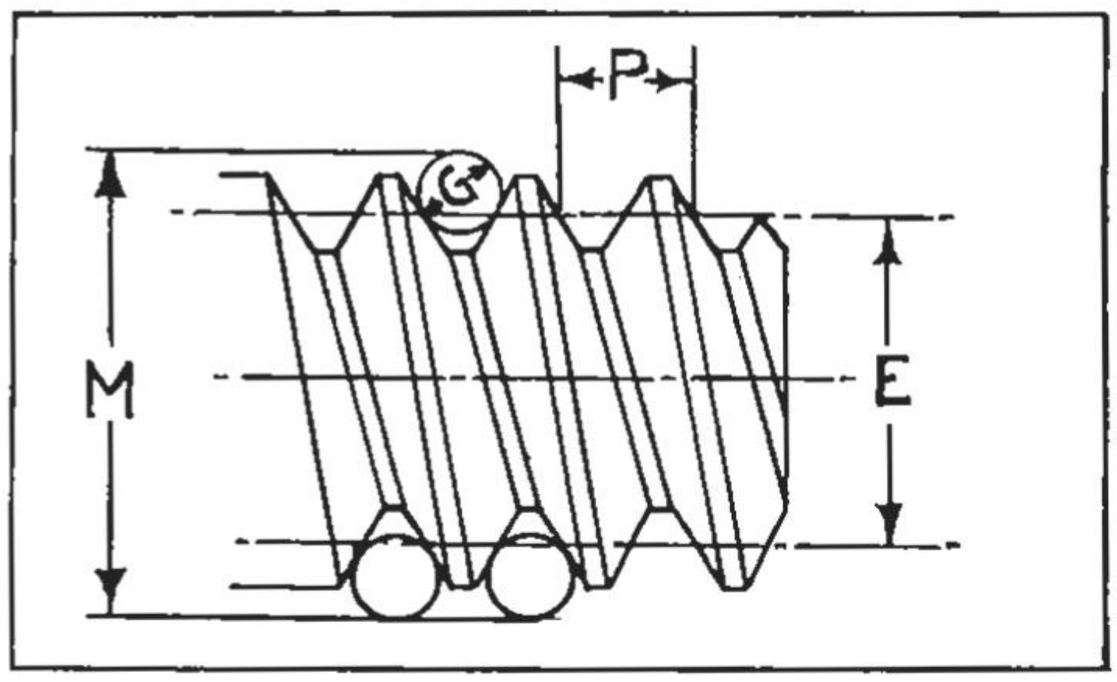


**Fig. 142 Measuring Pitch Diameter over three Wires**

## Table 8 Optimum Sizes for "Measuring Wires"

| Angle of Thread | 60° | 55° | 47½° | 29° |
|---|---|---|---|---|
| Best Wire Size | ·57735xp | ·56369xp | ·54626xp | ·51645xp |

From this, the available wire size nearest to the optimum is selected. The diameter of the wire actually used is not critical providing it enters the thread and bears on the flanks. The shank or plain portion of number sized drills are ideal for this purpose and are frequently used.

The pitch diameter may then be calculated from the following formulae:

E = Pitch Diameter.
M = Size over 3 wires.
G = Actual size of Wires.

60° Threads E = M — 3G + .86603p.
55° Threads E = M — 3.16568G + .96049p.
47½° Threads E = M — 3.4829G + 1.13634p.
29° Threads E = M — 4.9939G + 1.933357p.

These formulae ignore the effect of the helix angle. For helix angles up to 5°, errors from this cause do not exceed .00015.

## Use of Lubricant when Cutting Screw Threads

When cutting screw threads in steel, a cutting oil or lubricant of some type should be used. This will help to prevent tearing of the steel by the cutting tool and assist in producing a good finish on the thread. Further particulars of cutting lubricants are given on page 82.

CHAPTER NINE

# MISCELLANEOUS LATHE OPERATIONS AND ATTACHMENTS

Apart from the normal processes of turning, facing, boring, screw cutting, etc., lathes are employed for many special types of work. By the addition of suitable attachments they may be made to cope with a wide range of machining work outside of their normal functions or to perform the conventional lathe operations with greater speed and efficiency.

## Filing and Polishing

Where a finely finished surface free from tool marks is required it may be obtained by filing and polishing, as per Figs. 143 and 144.

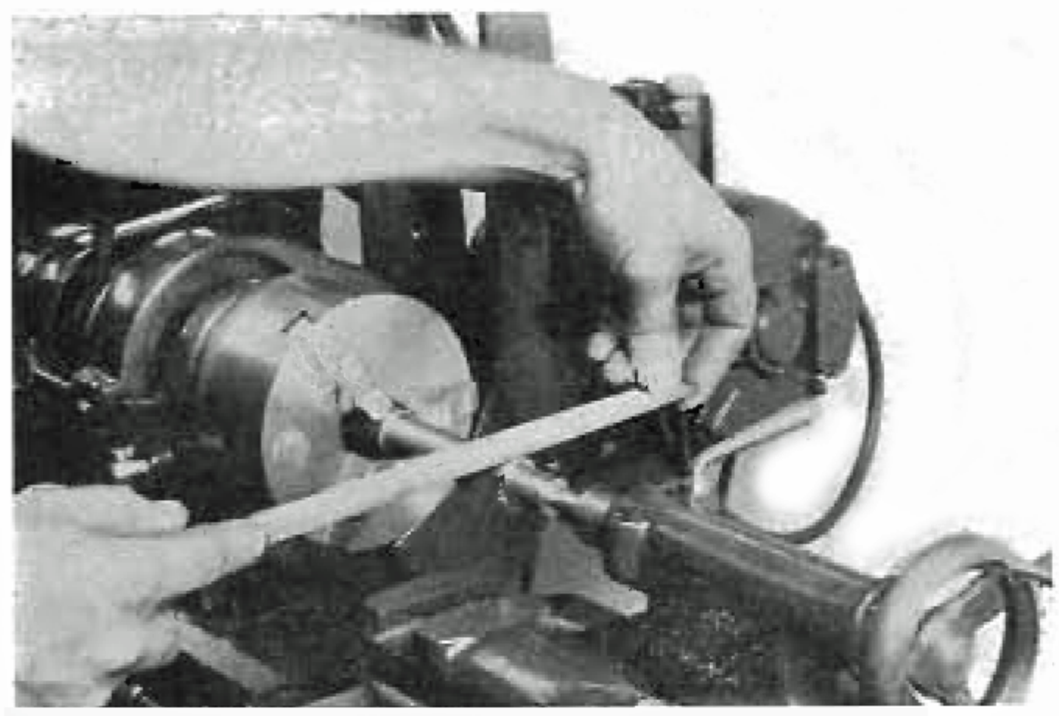

Fig. 143 Filing in the Lathe

The work is first filed until the tool marks disappear; a fine mill file should be used and the lathe run at a speed which allows two or three revolutions of the work to each stroke of the file. The file must be kept clean and free from oil and should not be held stationary while the work revolves. Just sufficient should be filed to ensure a smooth finish, as excessive filing will result in inaccurate and uneven work. It is a dangerous practise to use a file in the lathe without a handle, as in the event of it striking the revolving carrier or chuck jaws the tang may be driven deeply into the hand.

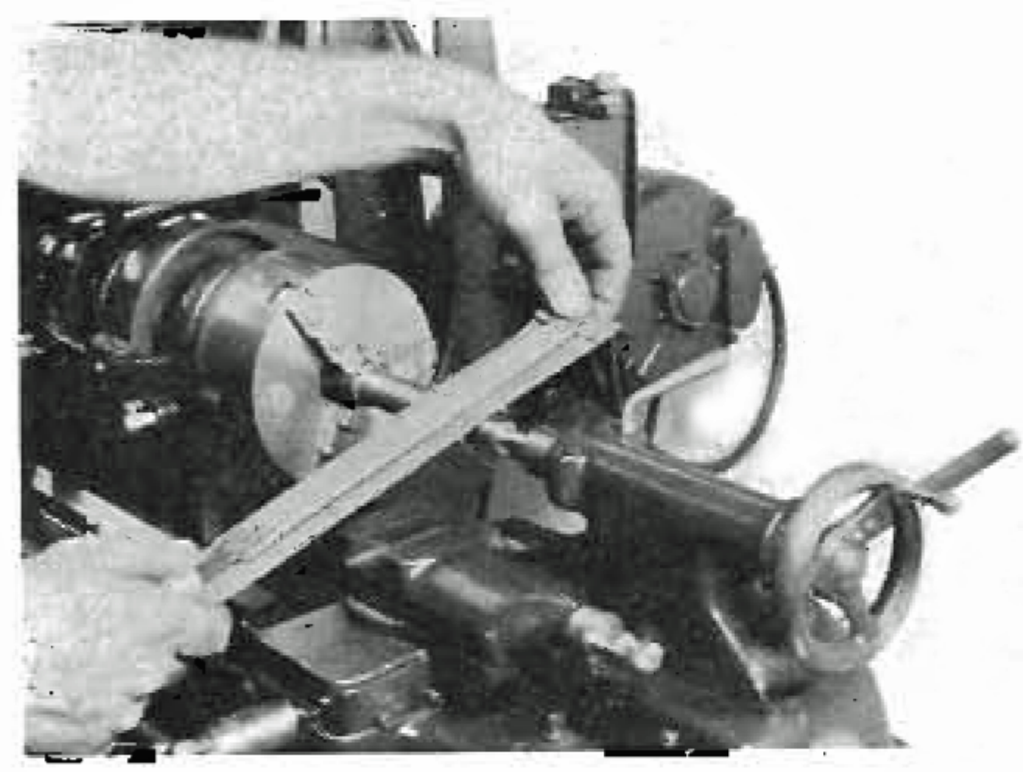

Fig. 144 Polishing with Emery Cloth in the Lathe

After filing, the work may be further polished by means of emery cloth. For parallel work it is often convenient to hold the emery cloth over a file, as shown in Fig. 144. A few drops of oil placed on the job before polishing will assist to give a good finish, free from scratches. Care must always be used not to allow the emery cloth to catch in the chuck jaws or become wrapped around the work as it revolves.

In addition to finishing plain workpieces, filing and polishing are employed for such jobs as rounding corners, finishing handwheel rims, and smoothing concave cuts.

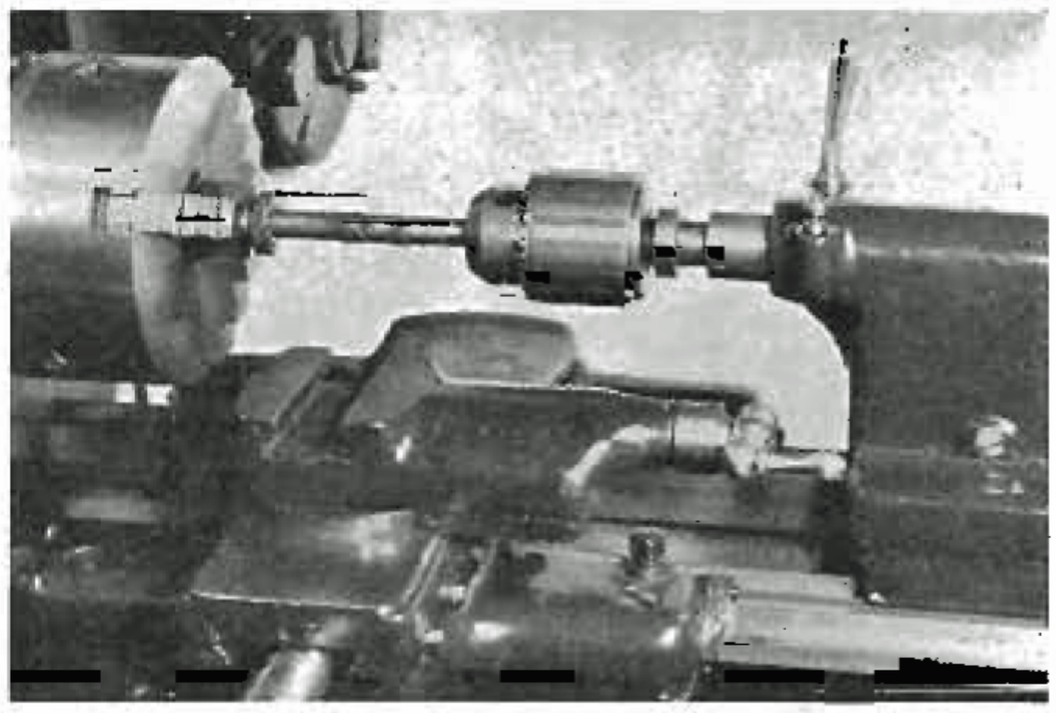

Fig. 145 Lapping a hardened Bush in the Lathe

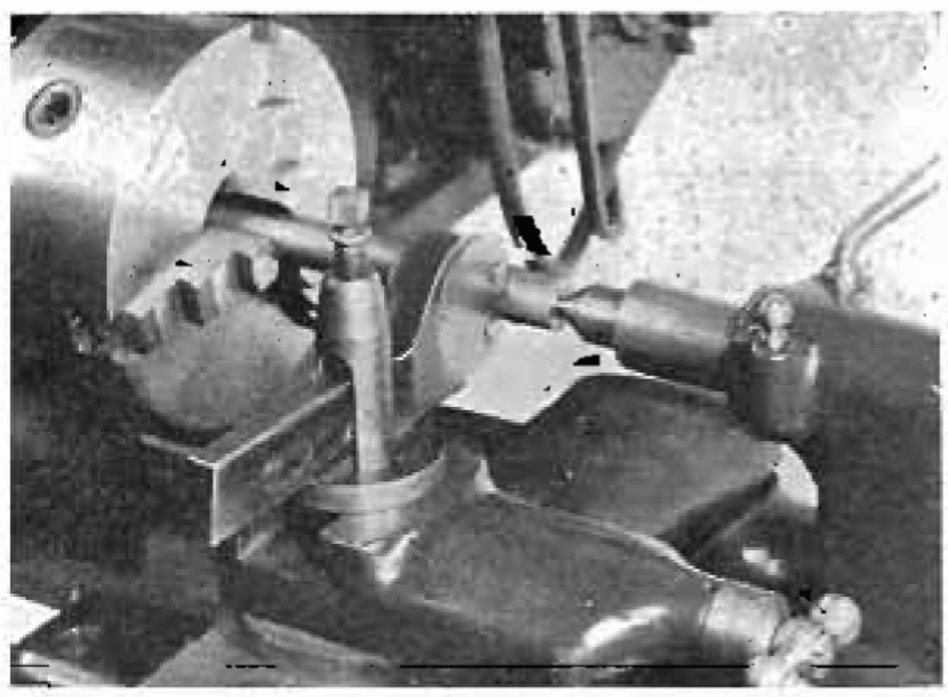

Fig. 146 Knurling a Tool Handle in the Lathe

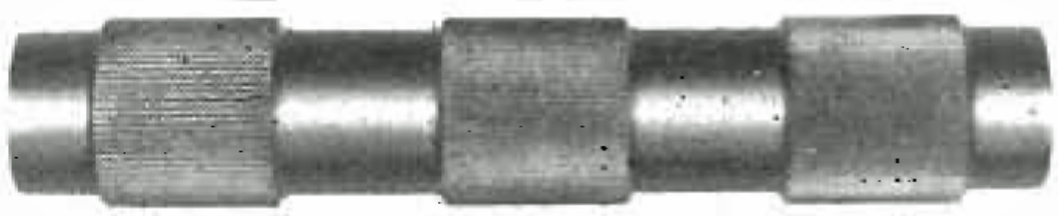

Fig. 147 Coarse, Medium and Fine Parallel Knurling

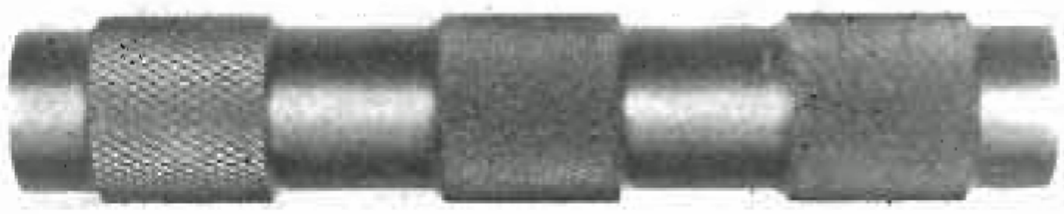

Fig. 148 Coarse, Medium and Fine Diamond Pattern Knurling

## Lapping

Lapping is frequently employed as a means of finishing precision parts, its most common application as a lathe operation being that of finishing holes to size in hardened workpieces.

Fig. 145 shows how the bore of a hardened bush may be finished to size by lapping. The spindle is run at a high speed while the lap is moved back and forth through the bore. The lap should consist of some material softer than the workpiece, such as copper, aluminium or cast iron. It is charged with a suitable abrasive material made into a paste with oil, and must be sufficiently long to engage the entire length of the hole to be lapped throughout the operation.

## Knurling

Knurling is a process of "upsetting" the surface of a piece of material in order to give a good gripping surface. This is achieved by forcing a hardened serrated roller or "knurl" into the work as it revolves. Parallel knurling, Fig. 147, is produced by a tool having a single roller, while diamond pattern knurling, Fig. 148, is produced by a tool having two rollers set one above the other. Tools for both types of knurling are illustrated in Fig. 149. For diamond pattern knurling, the rolls are usually mounted in a floating type head which will swivel to allow each roll to exert equal pressure on the work.

Slow spindle speeds should be used for knurling. The tool is forced slowly into the work to a depth of approximately $^1/_{64}$", and the feed engaged to travel the tool along the length to be knurled. At the end of the cut the feed is disengaged without withdrawing the tool or stopping the lathe. The tool is then fed into the work by approximately .004" — .005" and the feed reversed to bring the tool back to its starting point. This operation is repeated until the required

depth of knurl is reached. Once the knurling process has commenced, the tool should not be disengaged from the workpiece until the operation is complete. Oil should be applied generously throughout the operation.

Fig. 149 **Knurling Tools**

## Steady Rests

The stationary steady rest, Fig. 150, clamps on to the guide ways of the bed and is used to assist in supporting long slender shafts between centres or to support the outer end of a shaft, the other end of which is held in a chuck.

When mounting work in the stationary steady it is essential both that the end held in the chuck be set to run true and the job itself be in line with the axis of lathe centres both horizontally and vertically.

When it is possible to support the outer end of the work with the tailstock centre it may be mounted in this way, while the steady jaws are adjusted around it. Alternatively, the job may be held in the chuck and adjusted until the diameter on which the steady is to bear is running true, after which the steady jaws are carefully adjusted around it. In cases where this is not possible the alignment of the work must be tested and adjusted both vertically and horizontally, as per Figs. 151 and 152. After the correct alignment has been obtained the steady jaws may be locked, and if required the steady may be removed from the bed and replaced on the other side of the saddle bridge.

The travelling steady fits against the side of the lathe saddle and travels with it, being used to support long slender workpieces while

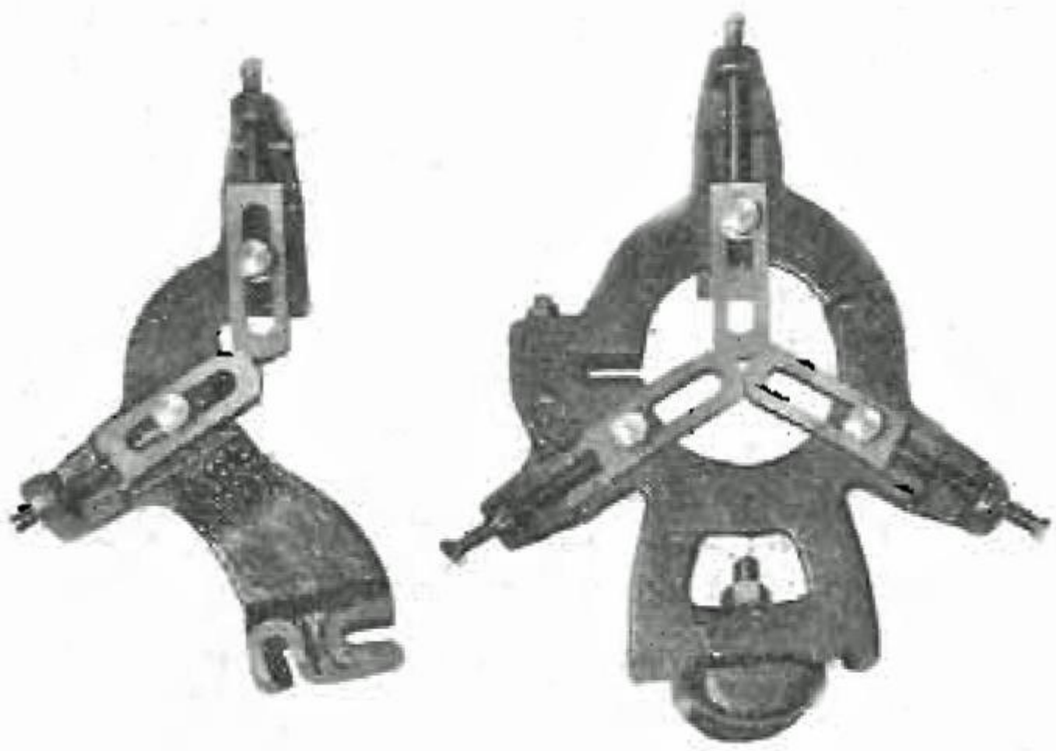

Fig. 150 **Travelling (L.) and Stationary (R.) Steady Rests**

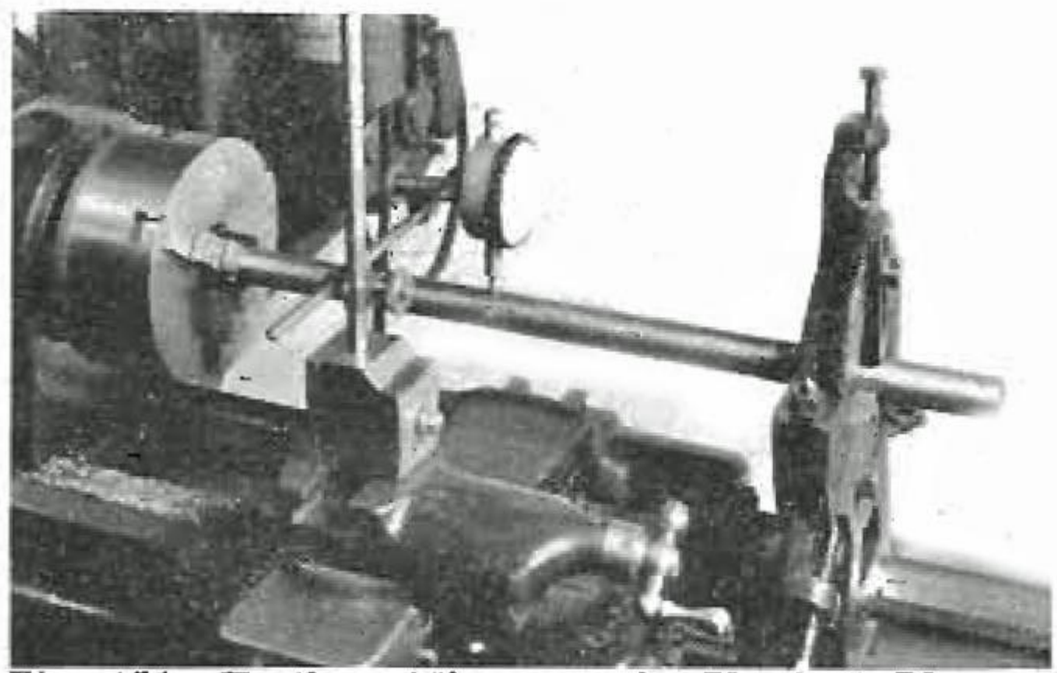

Fig. 151 **Testing Alignment in Vertical Plane**

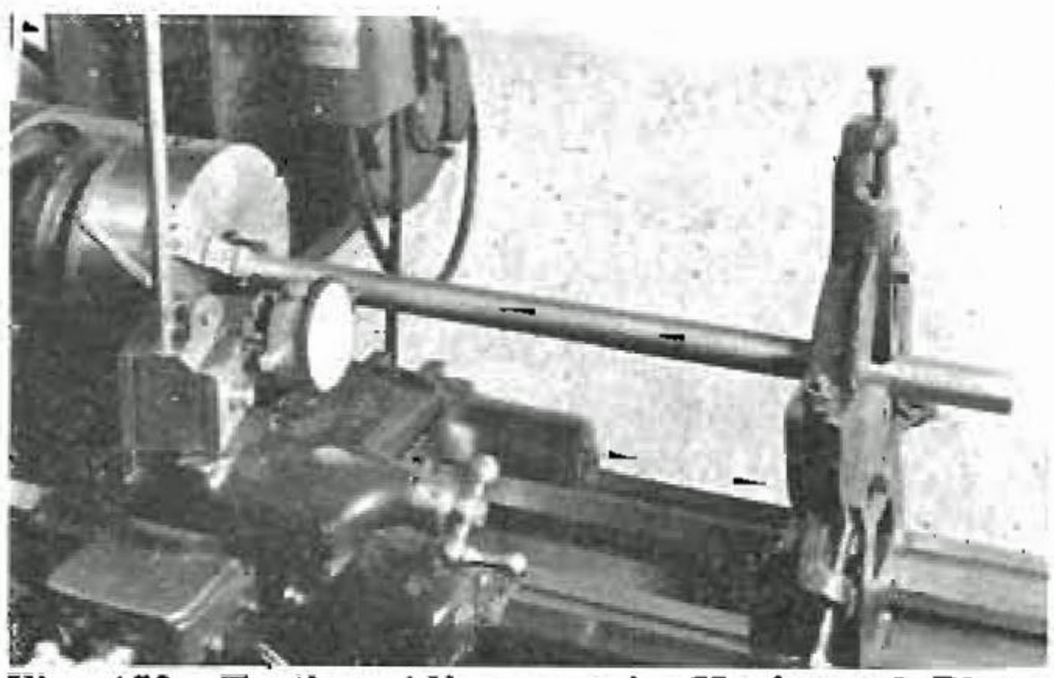

Fig. 152 **Testing Alignment in Horizontal Plane**

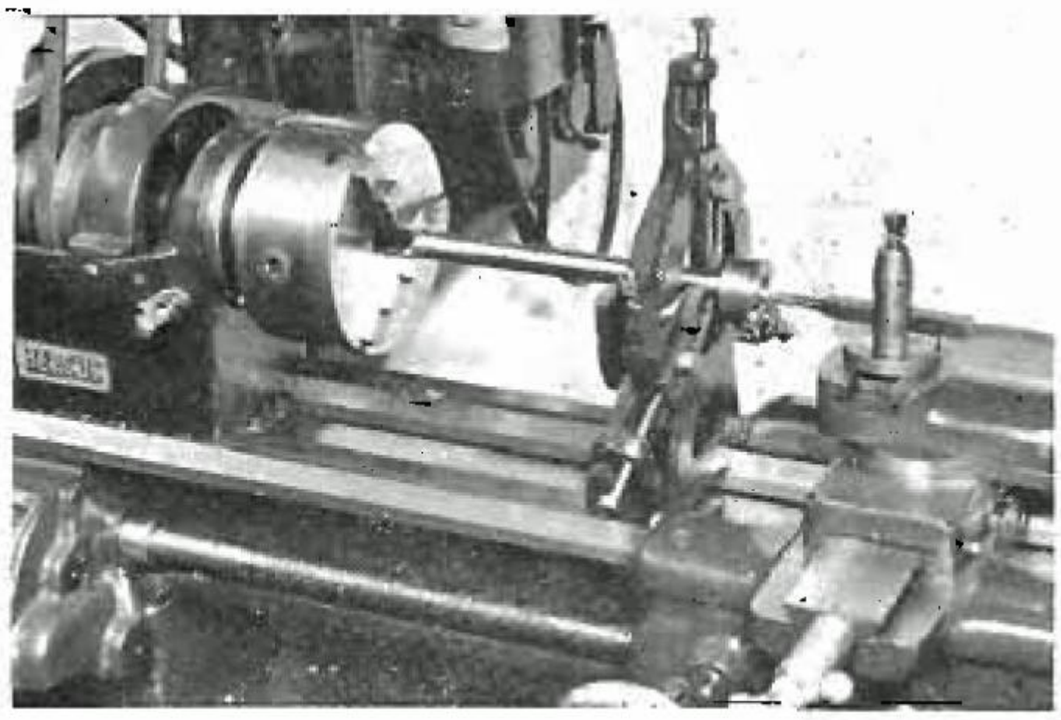

Fig. 153 Boring a Component mounted in Chuck and Stationary Steady

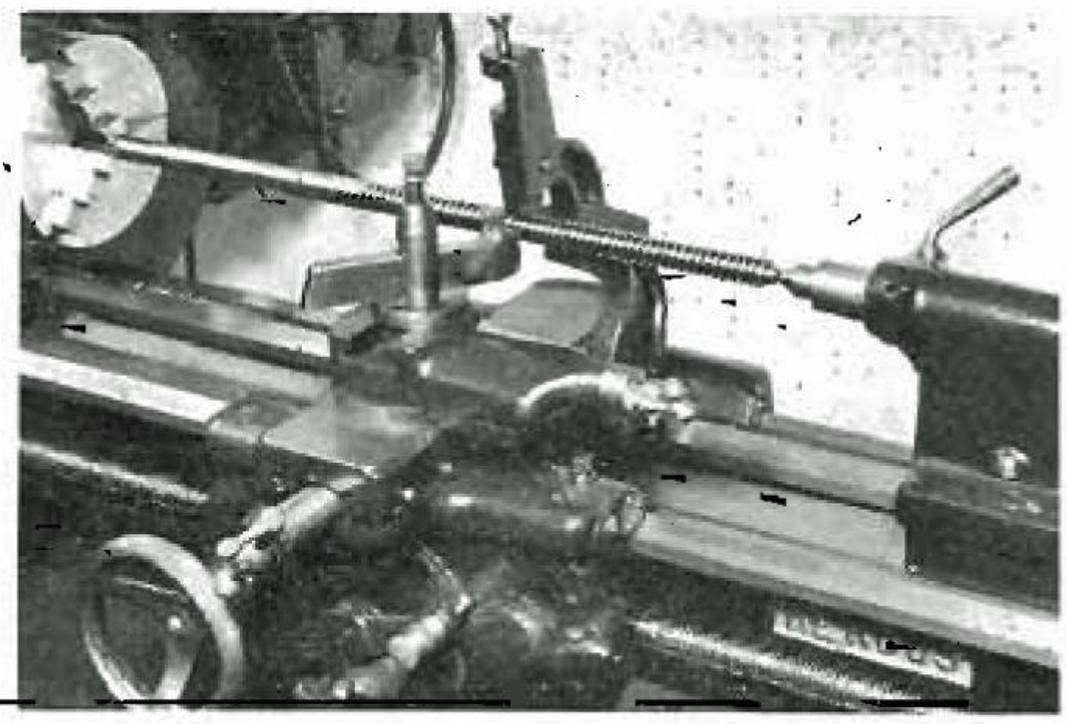

Fig. 154 Screwing a Feedscrew supported by the Travelling Steady

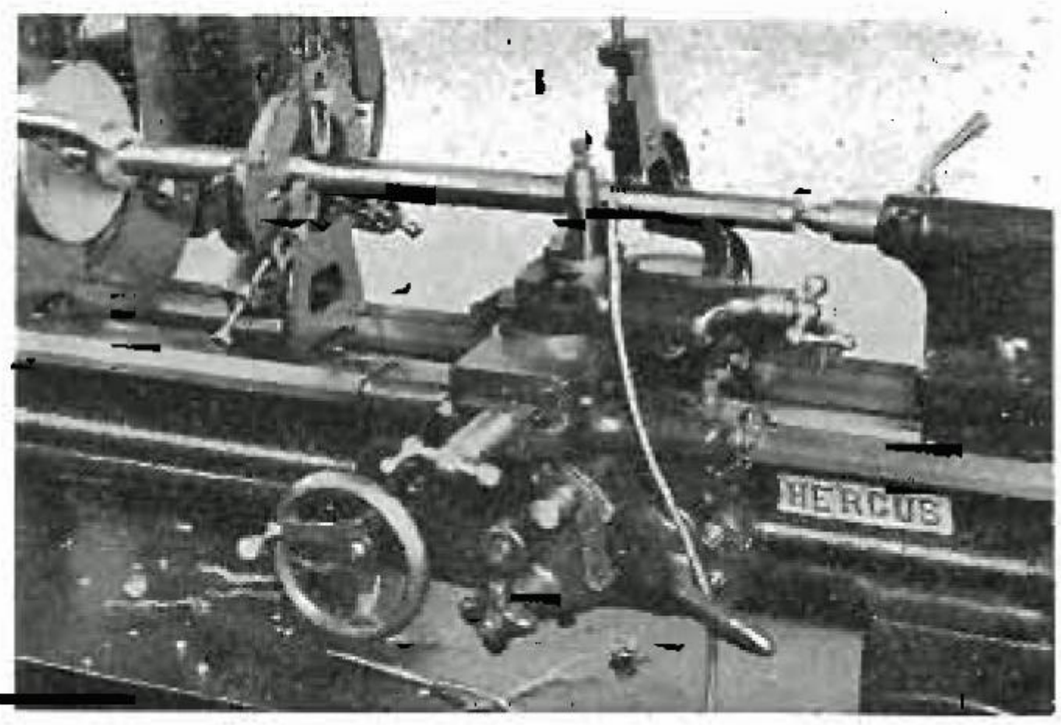


Fig. 155 Turning a Shaft supported by both Fixed and Travelling Steadies

being machined between centres and is particularly useful for long screw-cutting work. In setting the jaws of the travelling steady care must be taken not to spring the work out of its correct alignment by excessive or uneven pressure on the jaws. These should be adjusted to just lightly touch the work, adjustment being carried out as close as possible to the chuck or lathe centres in order to avoid the effects of any sag in the work-piece.

For straight parallel turning the jaws of the travelling steady may be set either slightly ahead or slightly behind the tool, depending on the nature of the particular job. In either case, however, it is necessary to re-set the jaws to the reduced diameter after each successive cut.

In setting either type of steady it should be borne in mind that that part of the job supported by the steady jaws will always appear to run true regardless of errors in alignment due to incorrect jaw adjustment, and that true running of the supported portion of the work is no test of correct steady setting.

Steady jaws should always be kept well oiled during operation.

## The Milling Attachment

The milling attachment enables a range of light milling work to be undertaken in the lathe, and consists of a T-slotted vertical slide having a movement of 3″ and a surface area of 3″ x 6″. The slide can be swivelled 90° either side of the vertical, and is mounted in place of the compound rest, where it will swivel through 360°.

The workpiece may be clamped direct to the T-slotted vertical slide, Fig. 156, or held in the vice, as per Fig. 157.

Milling cutters, Fig. 158, may be mounted directly in the taper of the spindle nose, in a collet in the headstock spindle, or on the milling cutter arbor, Fig. 159. In all cases the cut should be taken with the rotation of the cutter against the direction of the feed, as per Fig. 160.

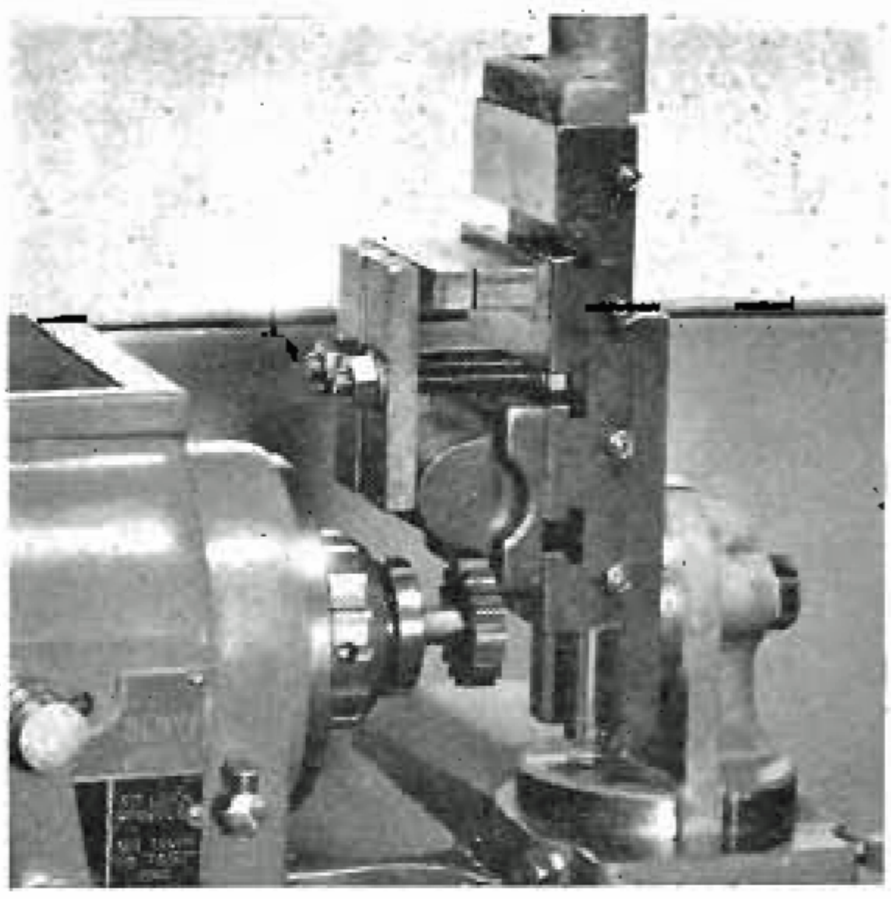

**Fig. 156 Milling a Component clamped to the Vertical Slide**

**Fig. 158 Milling Cutters**

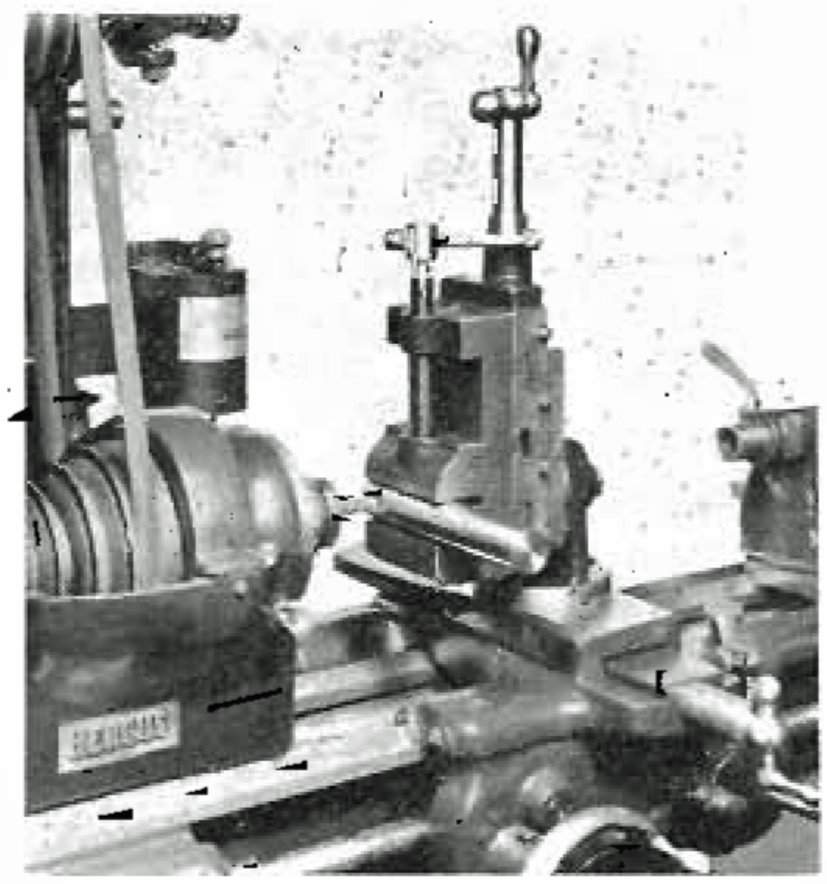

**Fig. 157 Milling a Feather Keyway in a Shaft**

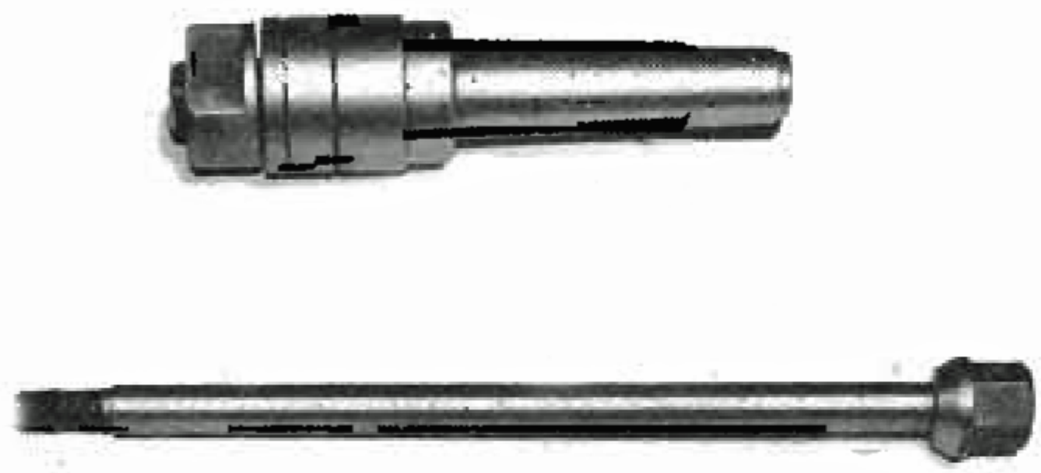

**Fig. 159 Milling Cutter Arbor and Draw-Bolt**

**Fig. 161 Milling a Hexagon Bolt Head**

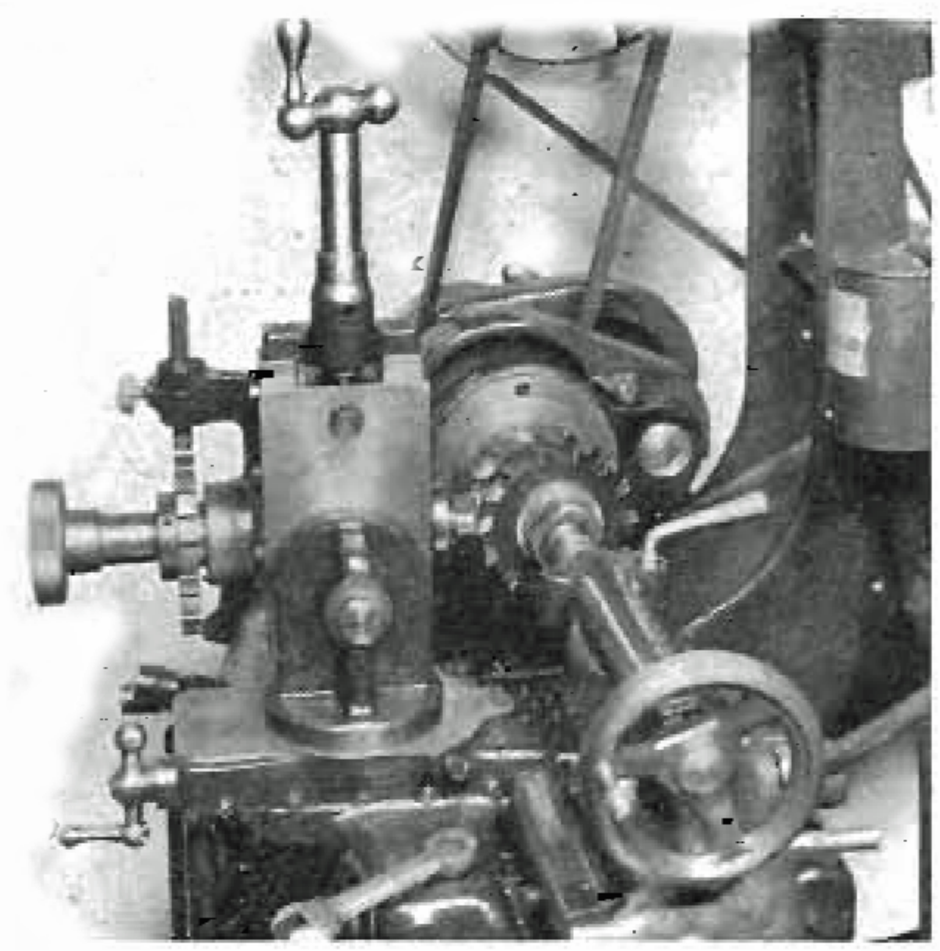

**Fig. 160 Direction of Feed for Milling**

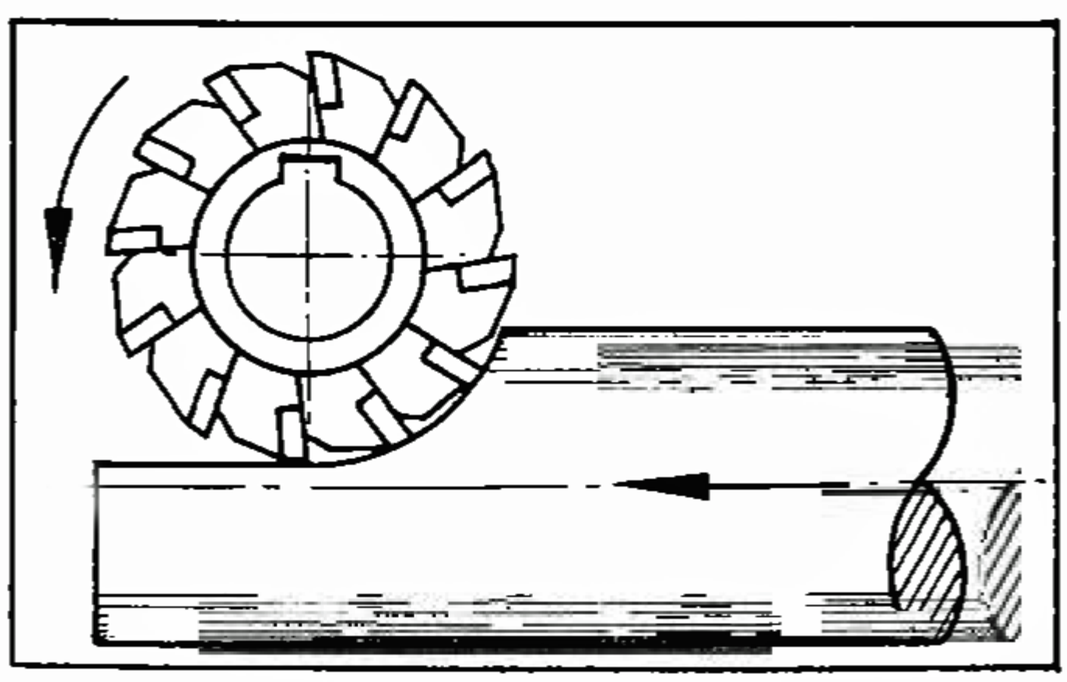

## Milling Cutter Arbor

The milling cutter arbor mounts directly in the taper of the headstock spindle, where it is secured by a draw-bolt. It has capacity between the nut and shoulder of 1½" for cutters of 1" bore, and is fitted with three spacing collars. Wherever possible the outer end should be supported by the tailstock centre, as per Fig. 161.

For indexing work such as squares and hexagons or for light gear-cutting the vice is replaced with the index head shown in Fig. 161; this has a No. 3 morse taper in the front of the spindle and an index plate fitted to the back. A 24-division plate is supplied as standard, and other numbers can be supplied to order. A draw-in collet attachment can be supplied to fit the spindle of the index head, and this will accommodate the full range of standard and special collets described in Chapter Five.

## The Boring Table

Work too large to be swung in the lathe may be mounted on the boring table for boring and facing operations, as per Fig. 162. The work is positioned and clamped on the top of the boring table and fed to the tool with the power sliding feed of the saddle.

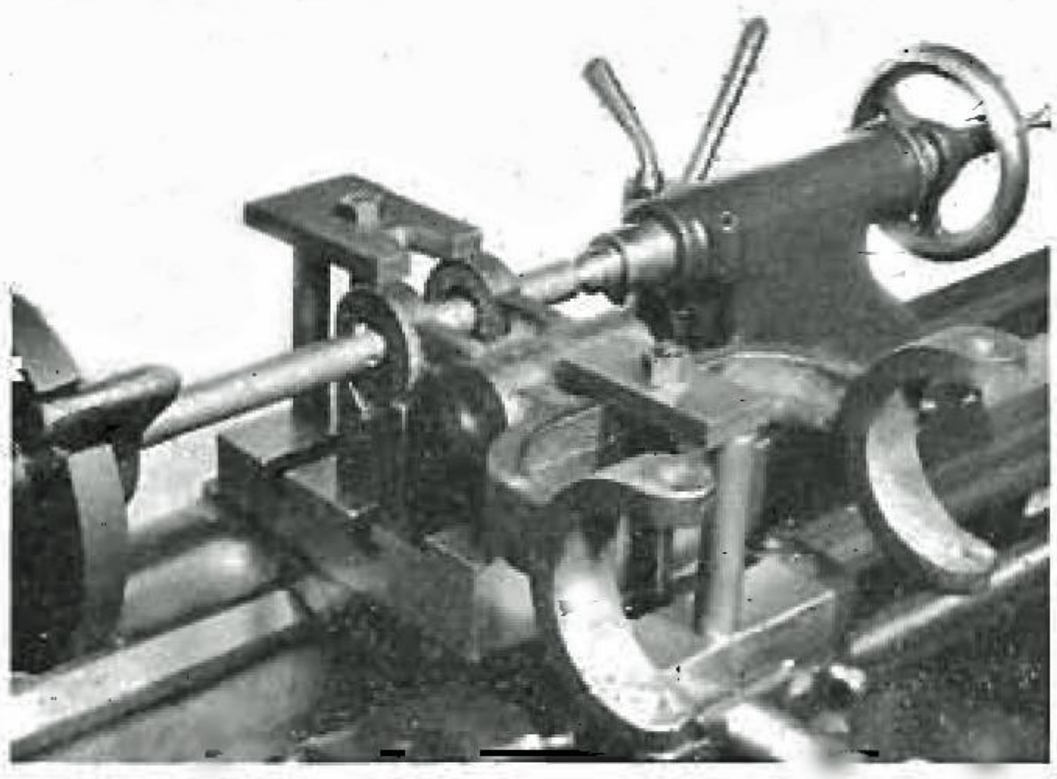

**Fig. 162 Component mounted on the Boring Table for boring and facing operations**

Where the hole to be bored will permit the boring bar being passed right through, the bar may be held between centres or in chuck and centre, this being known as "line boring". For blind holes or in other cases where line boring is not possible, an overhung boring tool is used, being mounted in a chuck, taper shank bar, or fixture on the faceplate, this being known as "snout boring". The actions of line and snout boring as well as facing are illustrated in Fig. 163.

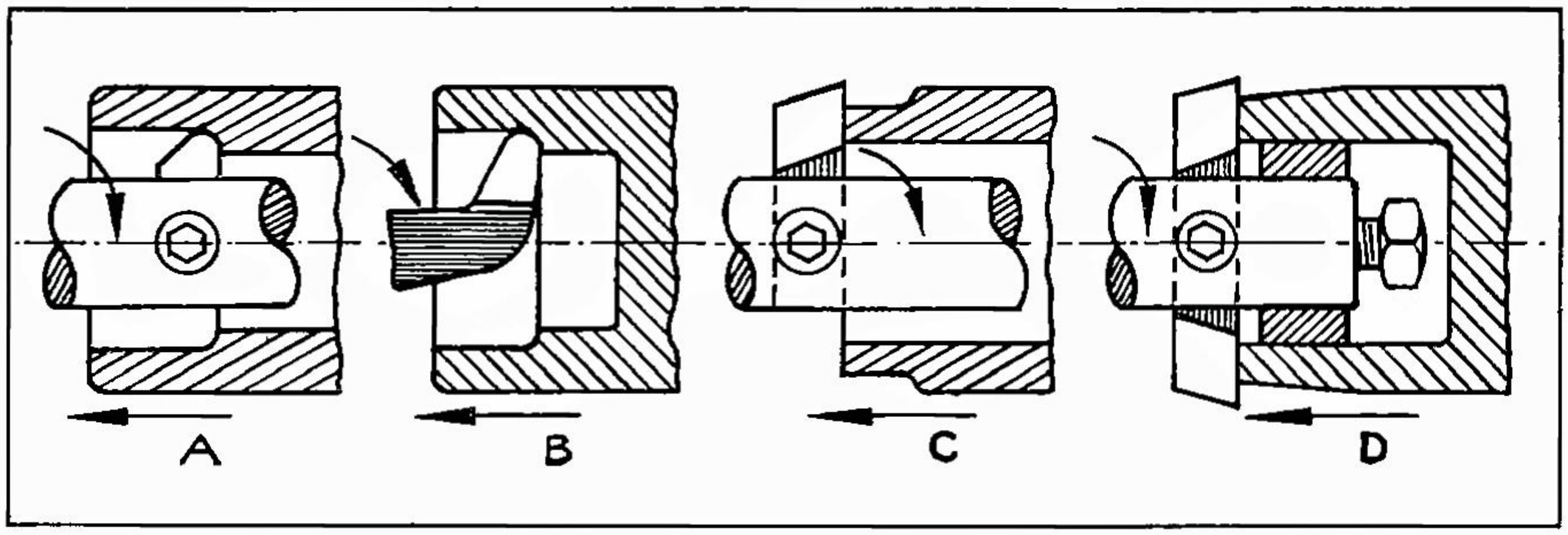


**Fig. 163 Showing Line Boring A, Snout Boring B, and Facing C and D. Arrows show Direction of Rotation and Feed**

Facing operations may be carried out either with a one-sided cutter, as shown in "C", Fig. 163, or with a balanced cutter, as in "D". When facing with a snout-mounted tool, as in "D", it is advisable to insert a bushing in the bore as illustrated to support the overhung end of the snout bar. The end of this bar must be kept well lubricated.

Facing may also be carried out using a faceplate mounted tool in conjunction with cross-wise movement of the work, and in this way comparatively large areas may be covered. The tool should, where possible, be arranged to cut on the downward stroke.

## Raising Blocks

Raising blocks Fig. 164 are used for raising the centre height of the lathe to accommodate relatively light work of large diameter. The set comprises blocks 1" high for the headstock, tailstock and compound rest, an extended bracket for the change gear guard, special safety guard plus all necessary bolts and screws. Suitable raising blocks for both fixed and travelling steadies are also available if required.

When fitting raising blocks to the lathe it is essential that the mating surfaces be clean and free from burrs or marks which could cause mis-alignment. A lathe so fitted will accept work beyond its original designed capacity and care should be exercised not to overstrain the machine by taking heavy cuts on large diameters.

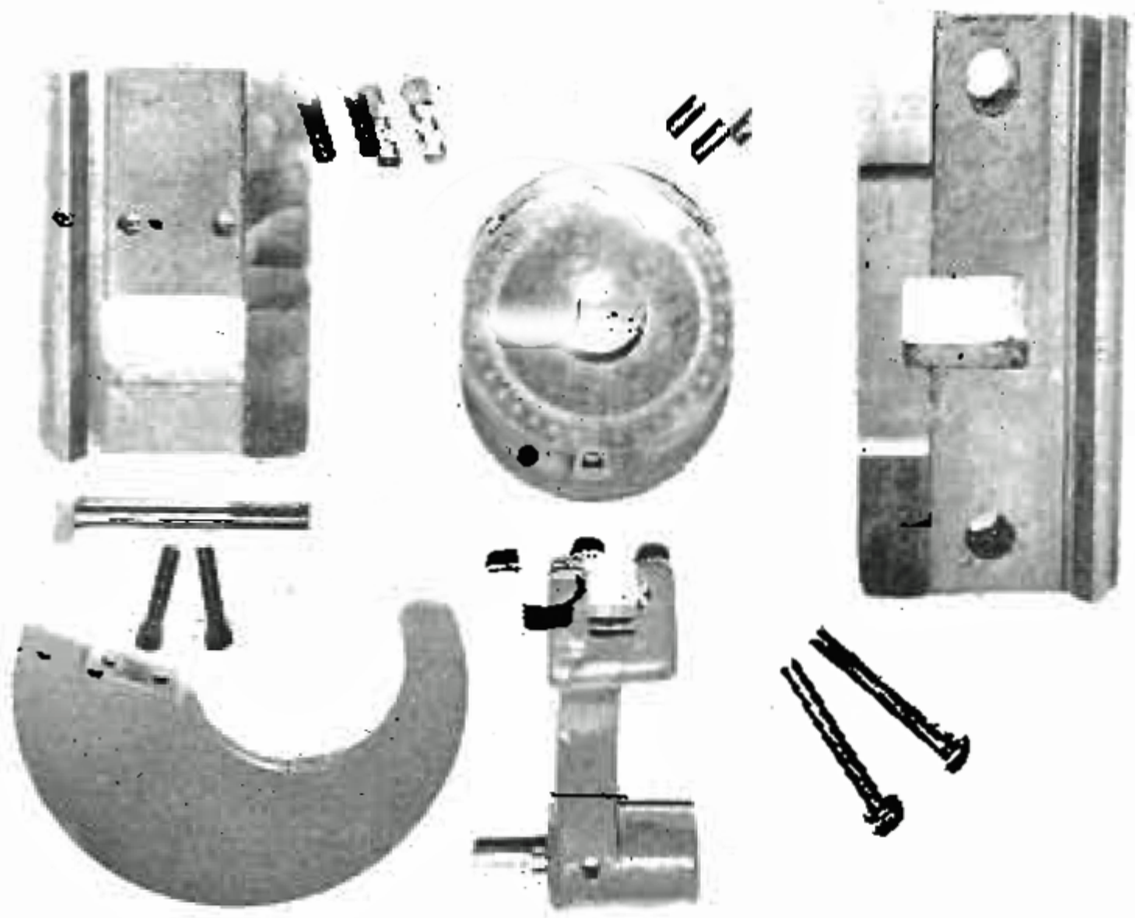

**Fig. 164 Raising Blocks**

## The Square Turret

The square turret, Fig. 165, is made to fit the T-slot on top of the standard compound slide rest in place of the American type tool holder normally supplied. The turret will accommodate four $\frac{3}{8}$" square cutting tools and indexes, accurately enabling these to be used in sequence. The square turret can also be supplied as "non-indexing".

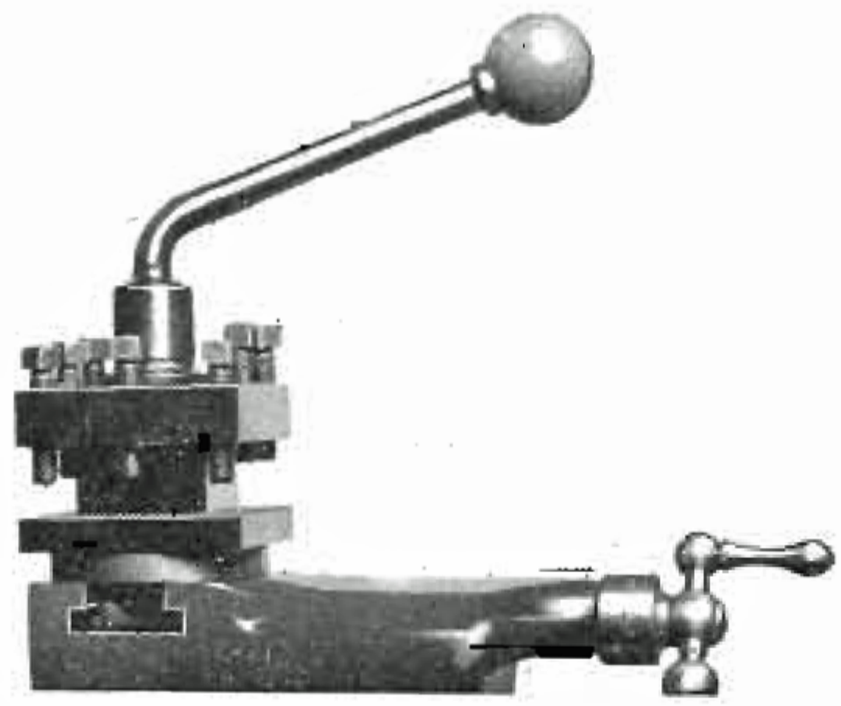

**Fig. 165 Square Turret**

## Saddle Stop

The six position saddle stop, Fig. 166, clamps over the front V-way of the bed and is extremely useful on repetition work when a number of shoulders are required to be accurately spaced. The stop indexes to six positions and is provided with six long and six short stop screws.

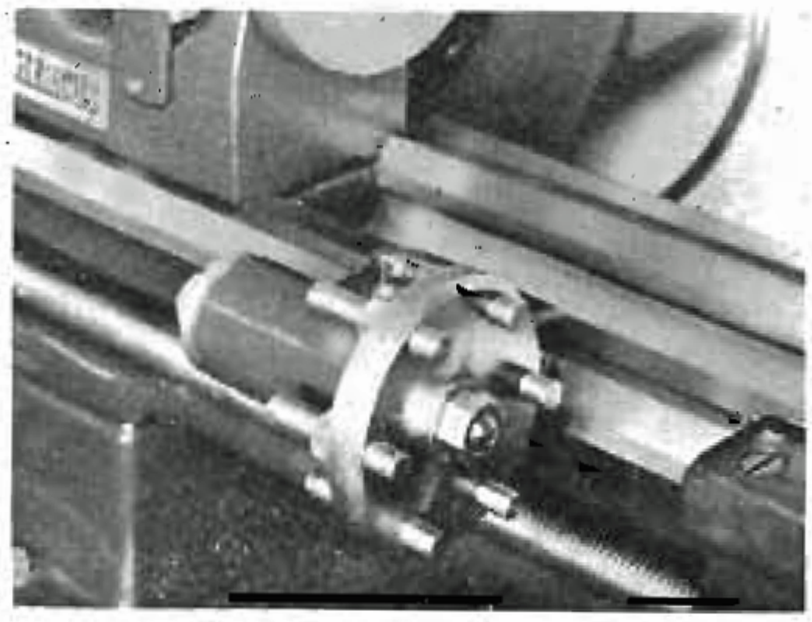

**Fig. 166 Six Position Saddle Stop**

## Micrometer Stop

The micrometer saddle stop, Fig. 167, is a precision stop with micrometer adjustment, and is very useful for spacing shoulders when turning or boring. Neither this nor the six position stop are automatic stops to power feeding, and the saddle should always be brought up to them by hand.

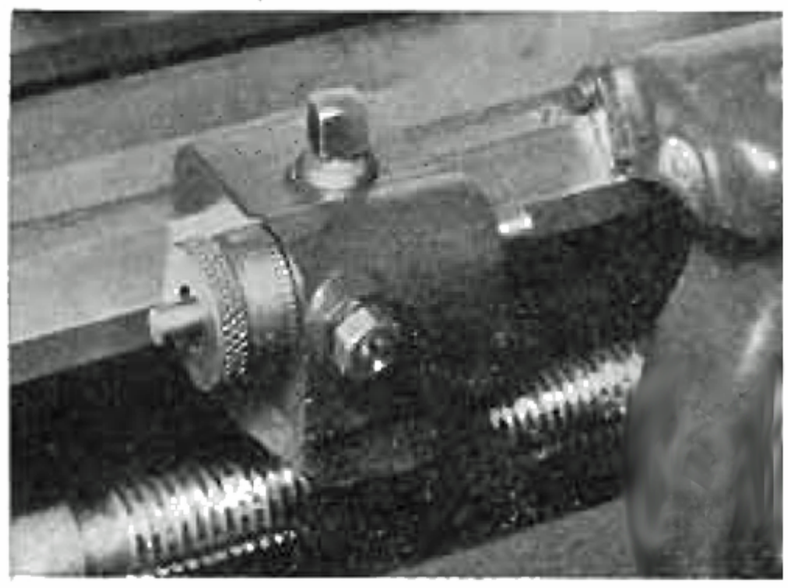

**Fig. 167 Micrometer saddle stop.**

## Drip Can

The drip can, Fig. 168, clamps to the back of the cross slide. It is adjustable for height and can be swivelled to apply the lubricant to the cutting tool.

**Fig. 168 Drip Can**

## Collet Rack

The collet rack, Fig. 169, is held by a bracket which clamps over the back V-way of the bed. It has provision for 16 collets, 2 centres, centre sleeve, nose adaptor, nose protection ring and draw tube.

## Special Centres

The range of standard and special centres commonly used for metal work are illustrated in Fig. 170.

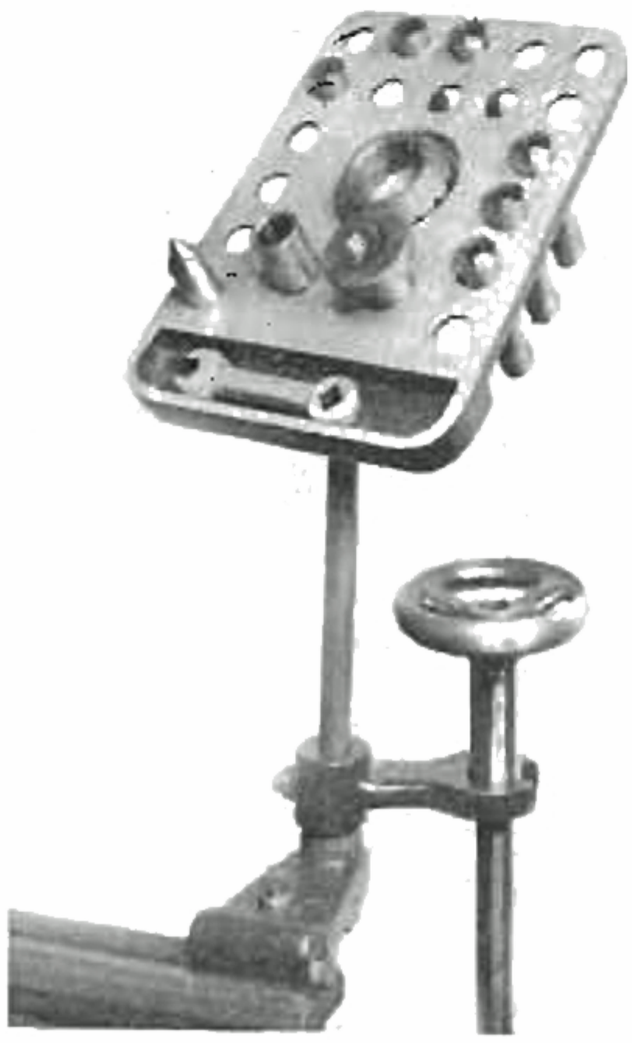

**Fig. 169 Collet Rack**

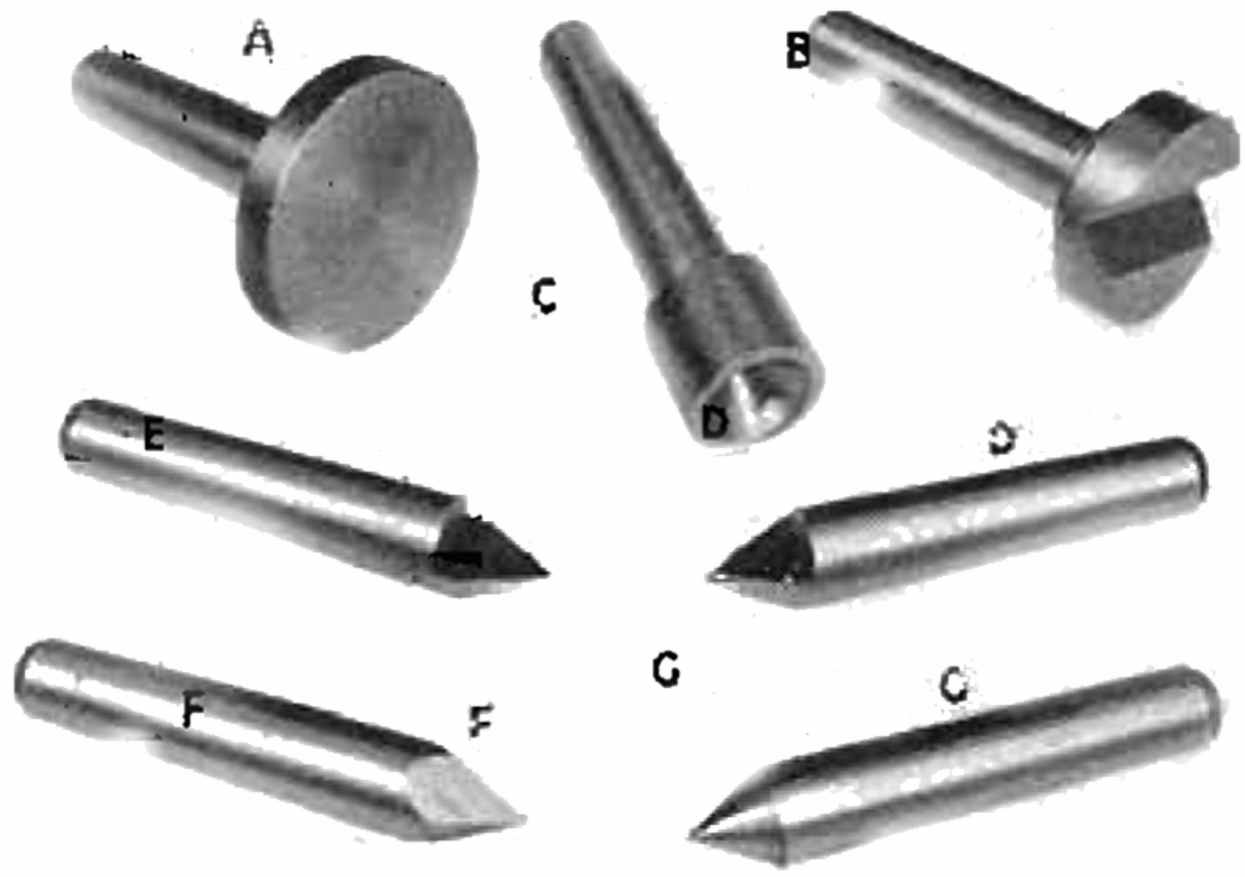


**Fig. 170 Standard and Special Centres for Metal Work**

e drill pad, A, and crotch centre, B, are used in the tailstock to support ces being drilled, see Chapter Six. The hollow centre, C, has a 60° conical ernal centre for supporting parts such as shafts which are not centred and l accommodate up to ⅞" diameter. The two third centre, D, is used in the lstock when turning work of very small diameter where the full centre would ıl the turning tool. The half centre, E, is used in the tailstock as a means centring small work with extreme accuracy. The square centre, F, is used truing up centres which are out of true or badly scored. The standard ıtre, G, fits either headstock or tailstock, has a 60° angle and No. 2 morse er. Two are supplied with each lathe.

## ood Turning Equipment

metal-working lathe may be ıpted for wood turning by lition of a tool rest, Fig. 171, l the spur, cup and screw ıtres, Fig. 172.

e screw centre (Z), Fig. 172, ews into the work and is unted in the headstock for ing and hollowing operations, ving a similar purpose to a ıck, as per Fig. 173.

r turning between centres the rk is driven by the spur centre ), Fig. 172, which is mounted the headstock with the cup ıtre (Y), Fig. 172, acting as ıd centre in the tailstock, as Fig. 174.

gh spindle speeds are desirable wood turning, and gouges l chisels should be kept sharp. ıere possible the tool motion uld be parallel with the grain, l on long work cuts should be ted at the centre and worked ards the ends.

e tool rest should be set about from the work and approxitely ⅛" above the centre line l moved forward as the diater of the work decreases.

commended spindle speeds for od turning are given in Table 9.

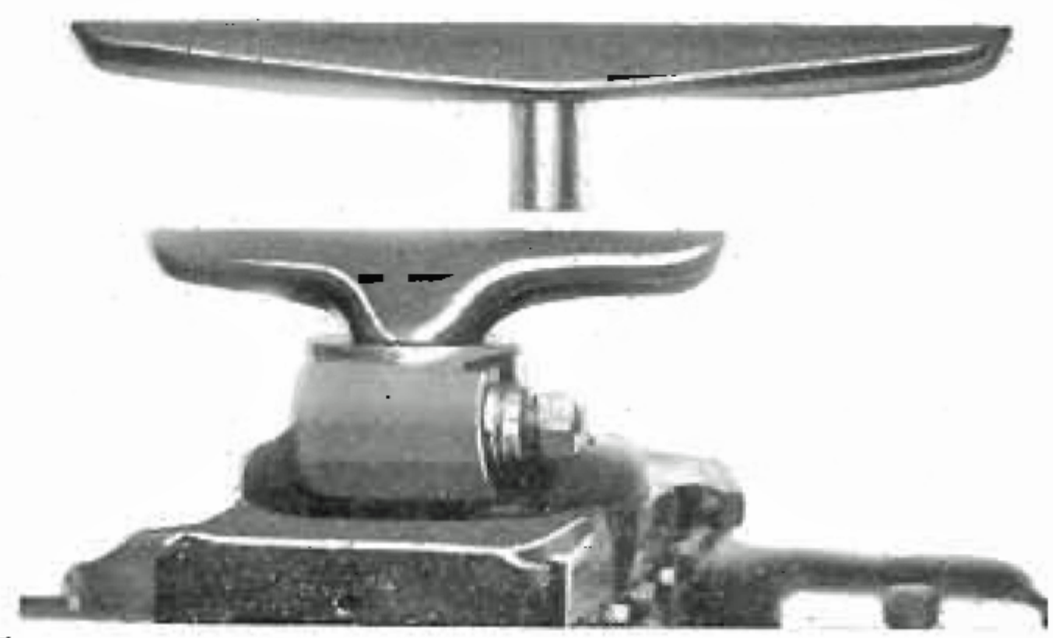

**Fig. 171 Long and Short Tool Rests for Wood Turning**

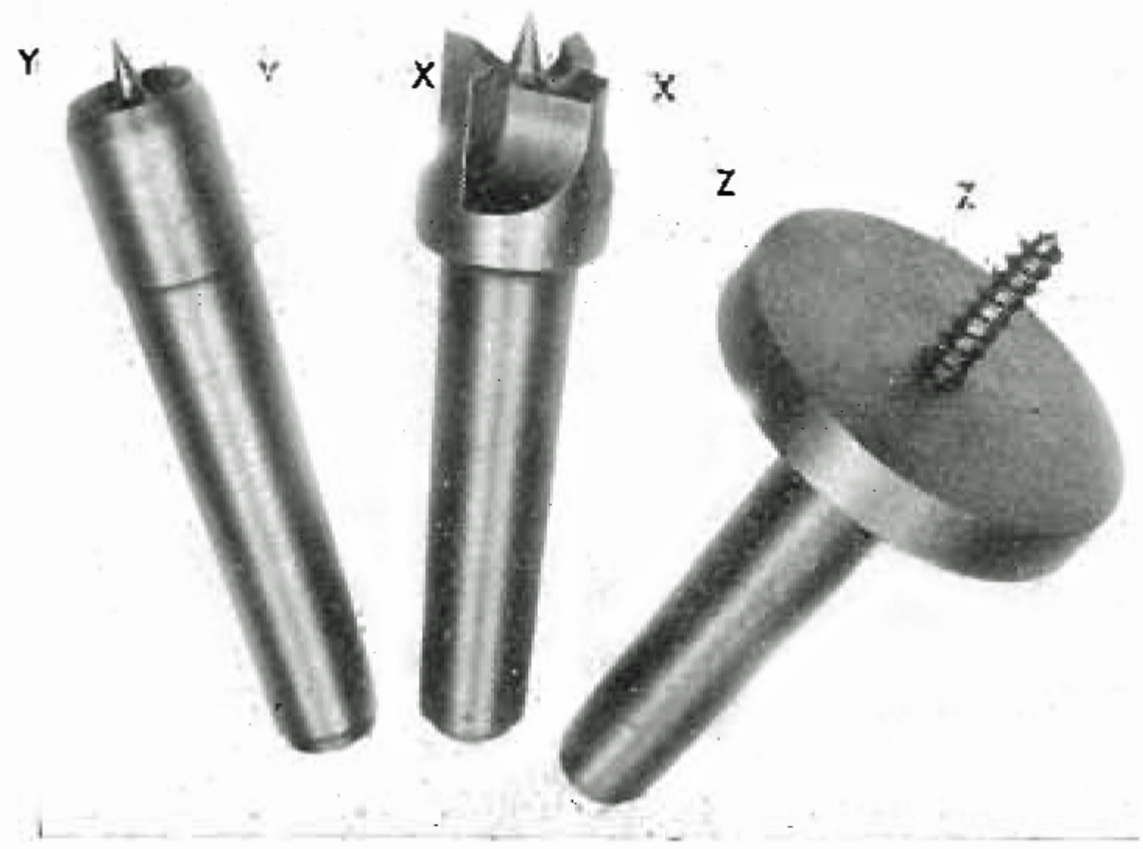


**Fig. 172 Spur "X", Cup "Y", and Screw "Z" Centres**

## Table 9 Speeds for Wood Turning

| DIA. | ROUGHING | FINISHING |
|---|---|---|
| Up to 3" | 1,000 RPM | 1,100 RPM |
| Up to 4" | 800 RPM | 1,000 RPM |
| Up to 5" | 670 RPM | 900 RPM |
| Up to 6" | 500 RPM | 800 RPM |

Fig. 173 Wood Turning, Work held on Screw Centre

Fig. 174 Wood Turning Between Spur and Cup Centres

## Turret Attachment

The turret or capstan attachment, Fig. 177, fits on the bed ways in place of the tailstock, and is used, either alone or in conjunction with the forming and cut-off slide, to enable the lathe to handle a range of light repetition work. The turret slide has a movement of $3\frac{3}{4}''$ and is operated by a lever, the head indexing automatically each time it is moved to the extreme right. The handle on top of the turret locks it in position after indexing. Each position of the turret has independently adjusted stop screws to control the length of cut.

When supplied with the lathe the turret holes are bored $\frac{3}{4}''$; if, however, the turret is sold separately, the holes are rough bored $\frac{5}{8}''$ and must be finish bored in position after the attachment has been fitted to the lathe.

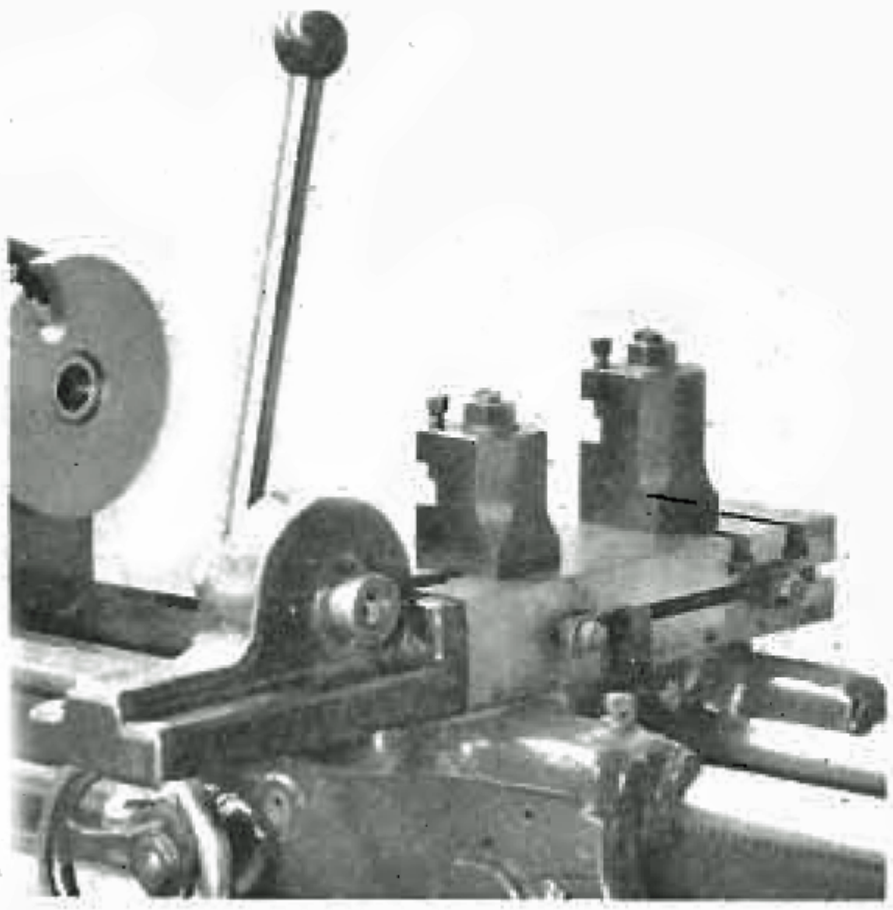

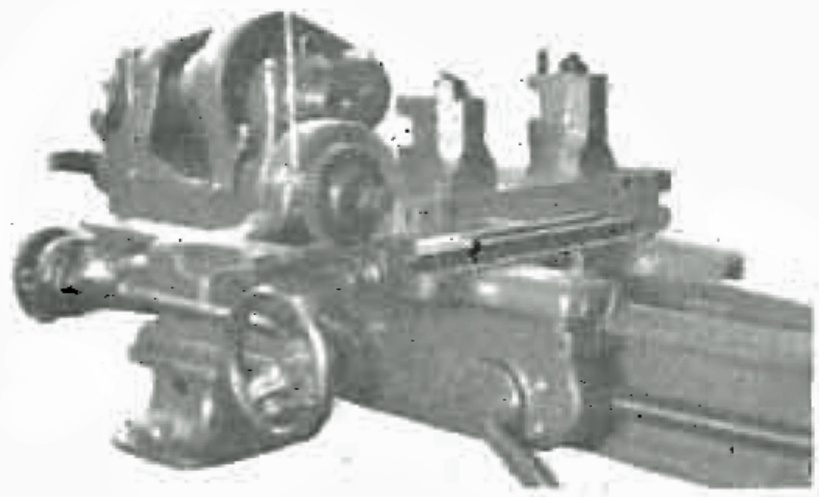

Fig. 176 Rack and Pinion Assembly for cut-off Slide

Fig. 175 Forming and cut-off Slide

## The Forming and cut-off Slide

The forming and cut-off slide, Fig. 175, is fitted on the dovetail slide of the saddle in place of the cross slide assembly. Cross movement is obtained through a lever operated rack and pinion mechanism, the position of the lever being adjustable to suit the convenience of the operator. Details of the rack and pinion assembly are illustrated in Fig. 176.

## Capstan Lathe

The addition of the turret attachment and forming and cut-off slide virtually converts the lathe to a light capstan lathe, suitable, with the collet attachment, for a wide range of bar work or alternatively for light chucking work.

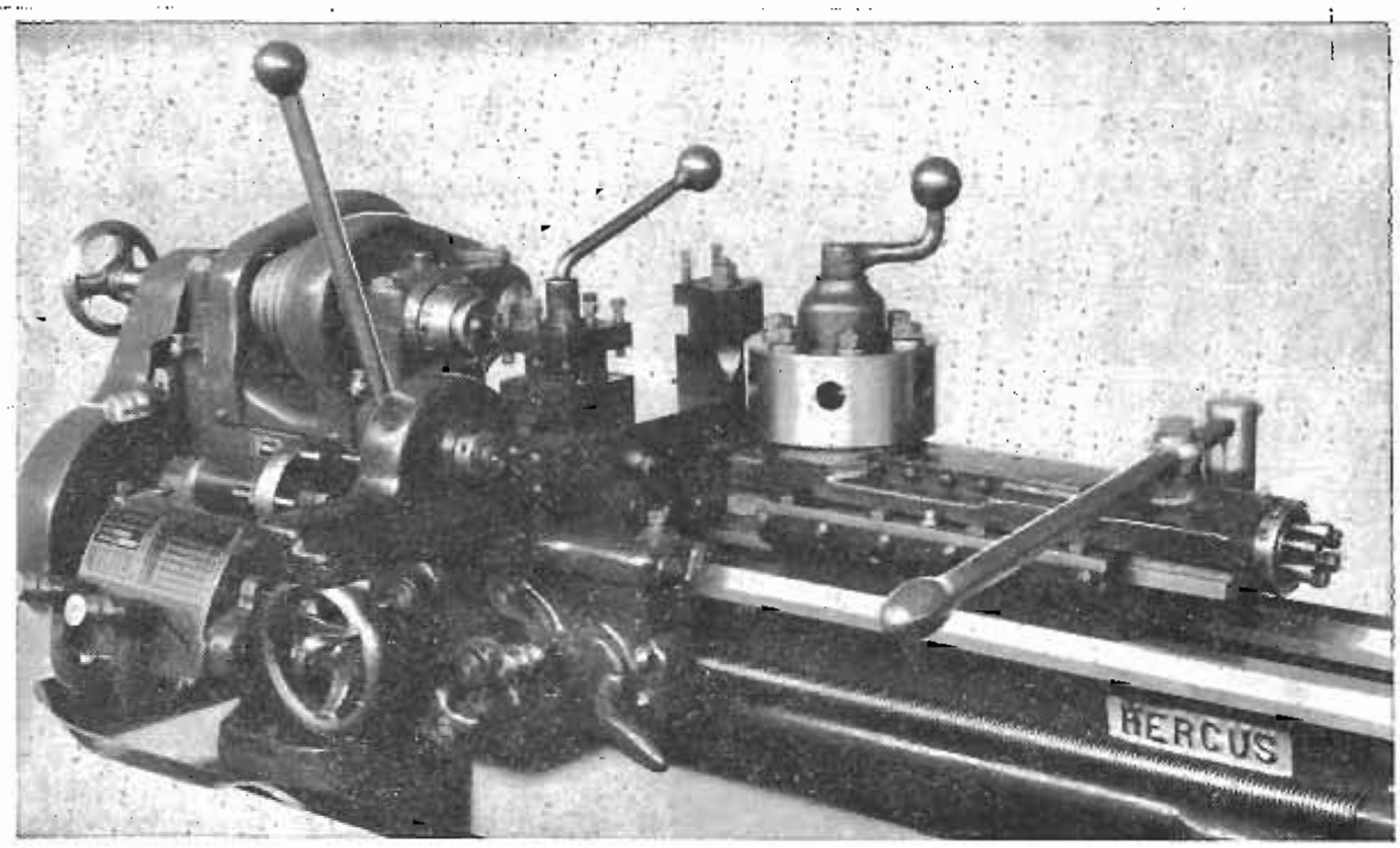


**Fig. 177 Lathe set up for use as a Capstan Lathe**

The square turret, Fig. 165, may be supplied in a form suitable for mounting on the forming and cut-off slide in place of the front tool post where, if used in conjunction with the six position saddle stop, it adds considerably to the range of repetition work which may be profitably undertaken.

## Rapid Style Tool Blocks

The Rapid Style tool block Fig. 178 is mounted directly to a special compound rest top and provides a fast and simple inter-change of pre-set tooling.

Tool holders are held against positive location faces by a quick action clamp permitting rapid and accurate tool change. Each tool holder has independent vertical adjustment. Four holders for standard tools, one Vee seat and one morse taper holder are supplied as standard with each holder. Additional holders to suit round shanks and parting off blades are available.

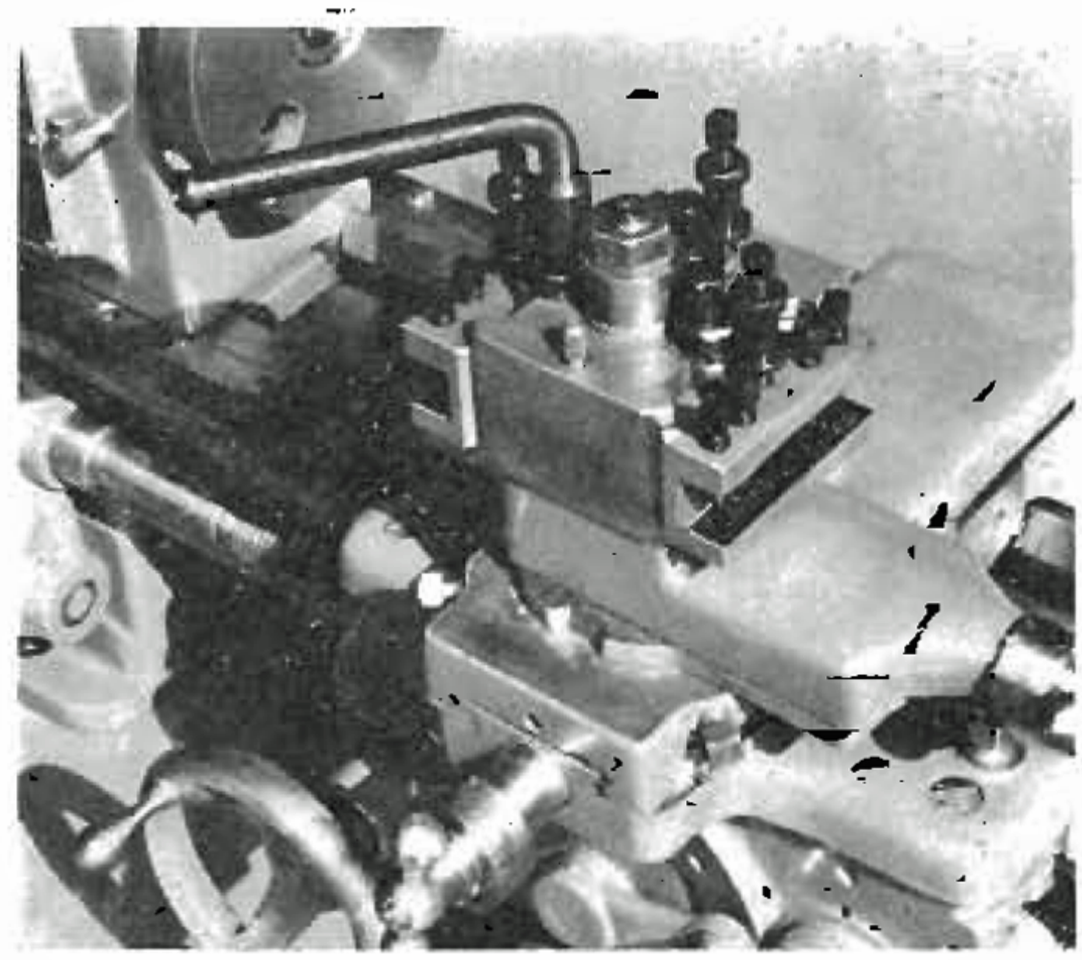

**Fig. 178 Rapid Style Tool Block**

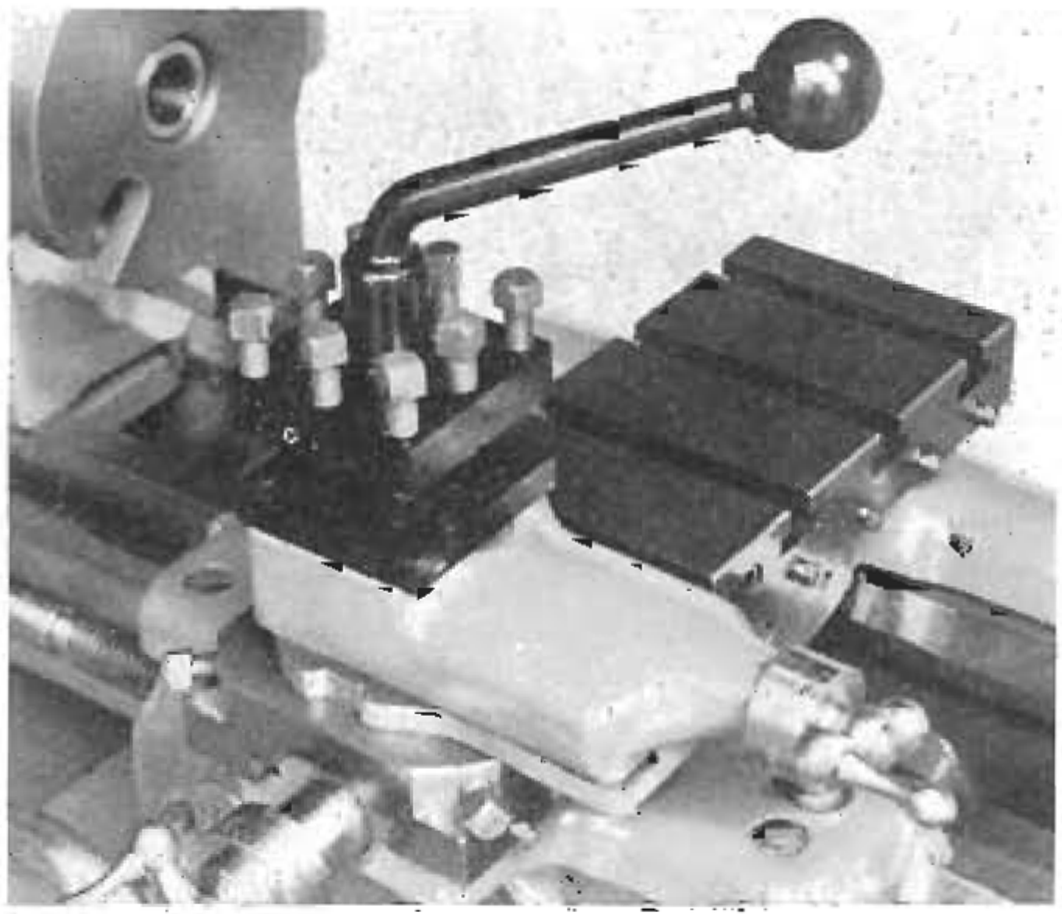

Fig. 179 Extended Cross Slide

## Extended Cross Slide

The extended cross slide Fig. 179 has a machined surface with Tee slots at the rear to accommodate a rear tool post for parting off or other operations.

The height of this slide is too great to accommodate the standard compound rest with the American Pattern tool holder. Instead a special compound rest is fitted carrying either a direct mounted square turret as per Fig. 179 or a rapid style tool block.

# METRIC EQUIPMENT

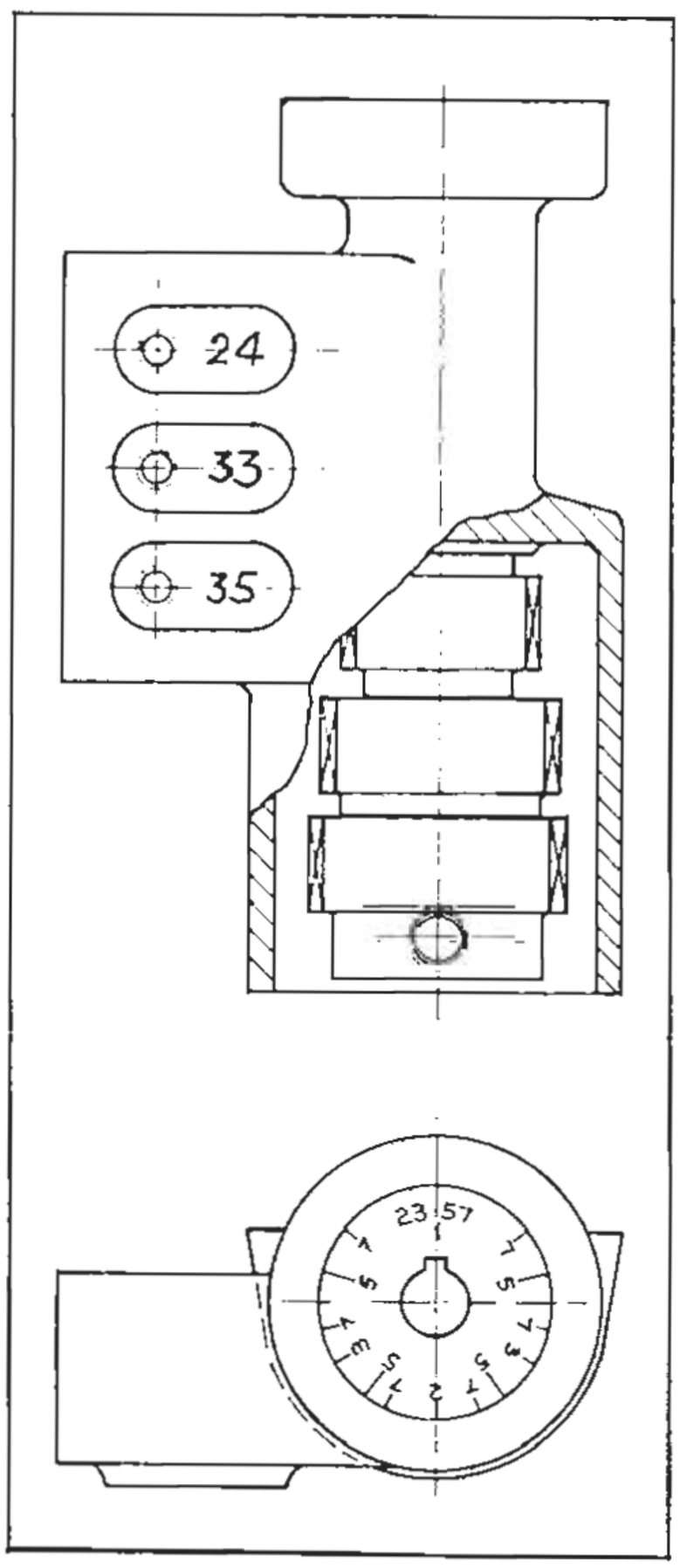


Fig. 180 Metric Thread Chasing Dial

## Metric Graduations

When required lathes can be supplied with metric feed screws fitted to both cross slide and compound rest together with graduated collars reading in .02MM. A metric graduated tailstock barrel can be supplied if required.

## Metric Leadscrews

All models of lathes can be supplied with metric leadscrews of 3MM pitch and Model A Lathes can be fitted with a metric quick change gearbox.

The metric thread chasing dial Fig. 180 for use with a metric leadscrew is provided with 3 worm wheels which, used in conjunction with a dial face divided into halves, thirds, fifths and sevenths will cover most of the metric pitch threads in common use.

Provision is made to mount the indicator in 3 positions by shifting the mounting stud to bring each of the worm wheels into mesh with the leadscrew. The Dial face is graduated and marked with numbers 1, 2, 3, 5, and 7, to indicate the positions at which the half nuts may be engaged.

Pitches which are a whole fraction of the leadscrew, 0.2, 0.25, 0.3, 0.5, 0.6, 0.75, 1.0, 1.5 and 3.0 MM may be screwed without reference to the dial. Other pitches should be screwed in accordance with the chart, Table 10.

Suitable transposing gears can be supplied to enable all models of lathes with metric leadscrews to screw inch pitch threads.

## Table 10 Metric Chasing Dial Positions

| PITCH In M.M. | 24 TEETH | 33 TEETH | 35 TEETH |
|---|---|---|---|
| 0·35 | | | 5 |
| 0·40 | 3 | | |
| 0·45 | 2 | | |
| 0·70 | | | 5 |
| 0·80 | 3 | | |
| 0·90 | 2 | | |
| 1·10 | | 3 | |
| 1·20 | 3 | | |
| 1·25 | | | 7 |
| 1·40 | | | 5 |
| 1·60 | 3 | | |
| 1·75 | | | 5 |
| 1·80 | 2 | | |
| 2·00 | 3 | | |
| 2·20 | | 3 | |
| 2·40 | 3 | | |
| 2·50 | | | 7 |
| 3·50 | | | 5 |
| 3·60 | 1 | | |
| 4·00 | 3 | | |
| 5·00 | | | 7 |
| 5·50 | | 3 | |
| 6·00 | 3 | | |
| 7·00 | | | 5 |
| 8·00 | 3 | | |

CHAPTER TEN

# USEFUL INFORMATION

## Belt Drives

The flat belt is one of the oldest methods of transmitting power from one shaft to another and, although largely outmoded by V belts, chains or gears, is still employed in many applications calling for a smooth, simple and inexpensive drive.

Rules for calculating pulley speeds and diameters are given below:

1. Speed of driven pulley $= \dfrac{\text{Speed of driving pulley x dia. of driving pulley}}{\text{Dia. of driven pulley}}$
2. Speed of driving pulley $= \dfrac{\text{Speed of driven pulley x dia. of driven pulley}}{\text{Dia. of driving pulley}}$
3. Dia. of driven pulley $= \dfrac{\text{Dia. of driving pulley x speed of driving pulley}}{\text{Speed of driven pulley}}$
4. Dia. of driving pulley $= \dfrac{\text{Dia. of driven pulley x speed of driven pulley}}{\text{Speed of driving pulley}}$

Except where it is required to shift the belt from one pulley to another, as with fast and loose pulleys on a countershaft, or from one position on a pulley to another, as with a drum pulley, it is desirable to have a crowned face on the pulley, as per Fig. 181. Belts connecting parallel shafts always tend to run towards that part of the pulley which is largest in diameter, and hence a crowned face will help to keep the belt in the centre of the rim. The necessary amount of crowning, "C", Fig. 181, is dependent on the speed of the belt, and varies from 1/20th of the width for belts travelling at high speeds to 1/10th the width for belts travelling at slow speeds. Pulleys for flat belt drives should be approximately 10% wider than the belt.

Wherever possible belt drives should be arranged with the slack side on top, as per Fig. 182. This gives a greater arc of contact and hence increases the power transmission capacity of the belt.

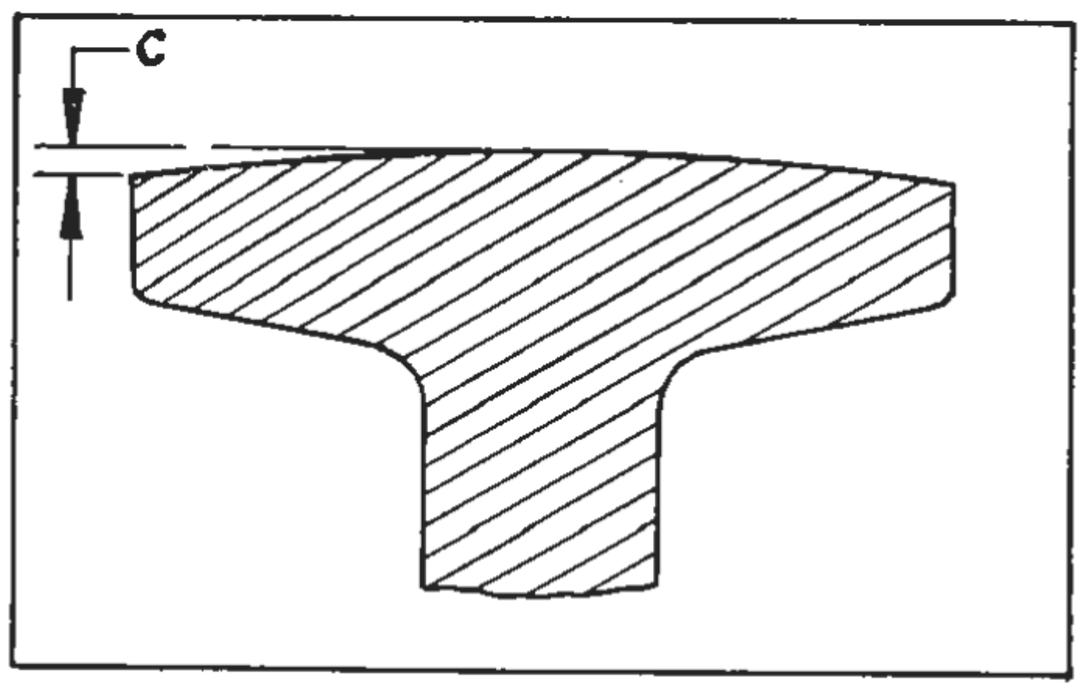


**Fig. 181 Crowned Face Pulley for Flat Belt**

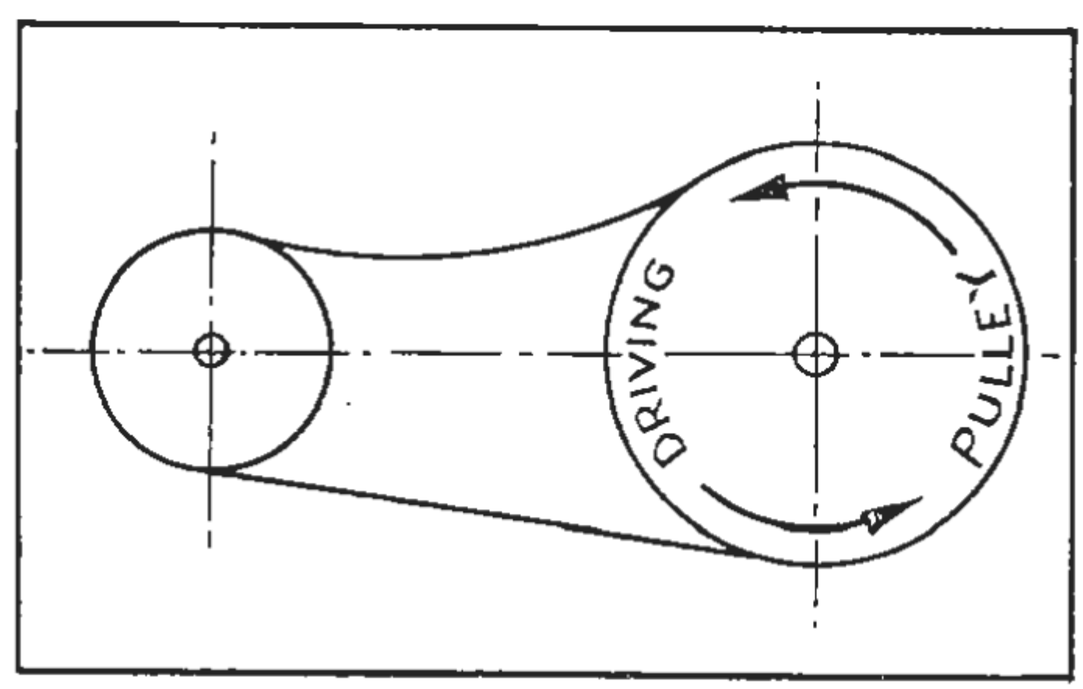


**Fig. 182 Pulleys driving with slack part of belt on top**

## Vee Belts

Vee belts are frequently used for short centre drives and make an efficient and trouble-free form of power transmission. Fig. 183 shows the cross-sectional dimensions of the three smaller sizes of Vee belts in common use.

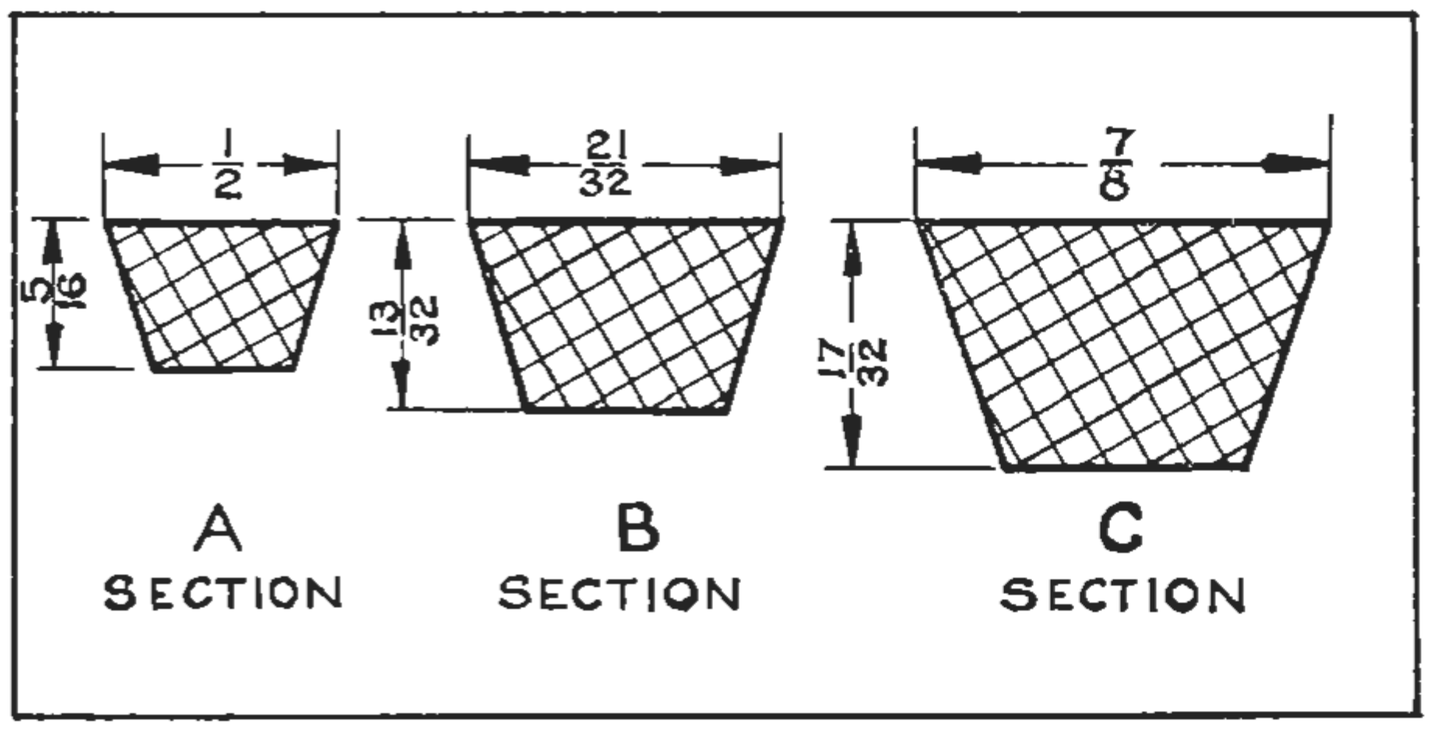


Fig. 183 Dimensions of Standard Vee Belts

Recommended dimensions for Vee pulley grooves to suit these belts are illustrated in Fig. 184. For "A" section belts the groove angle is 34° for pulleys under 6″ diameter and 38° for larger pulleys; for "B" section belts the angle is 34° up to 9″ diameter and 38° for larger pulleys, while for "C" section belts the angle is 34° up to 12″ diameter and 38° for larger pulleys.

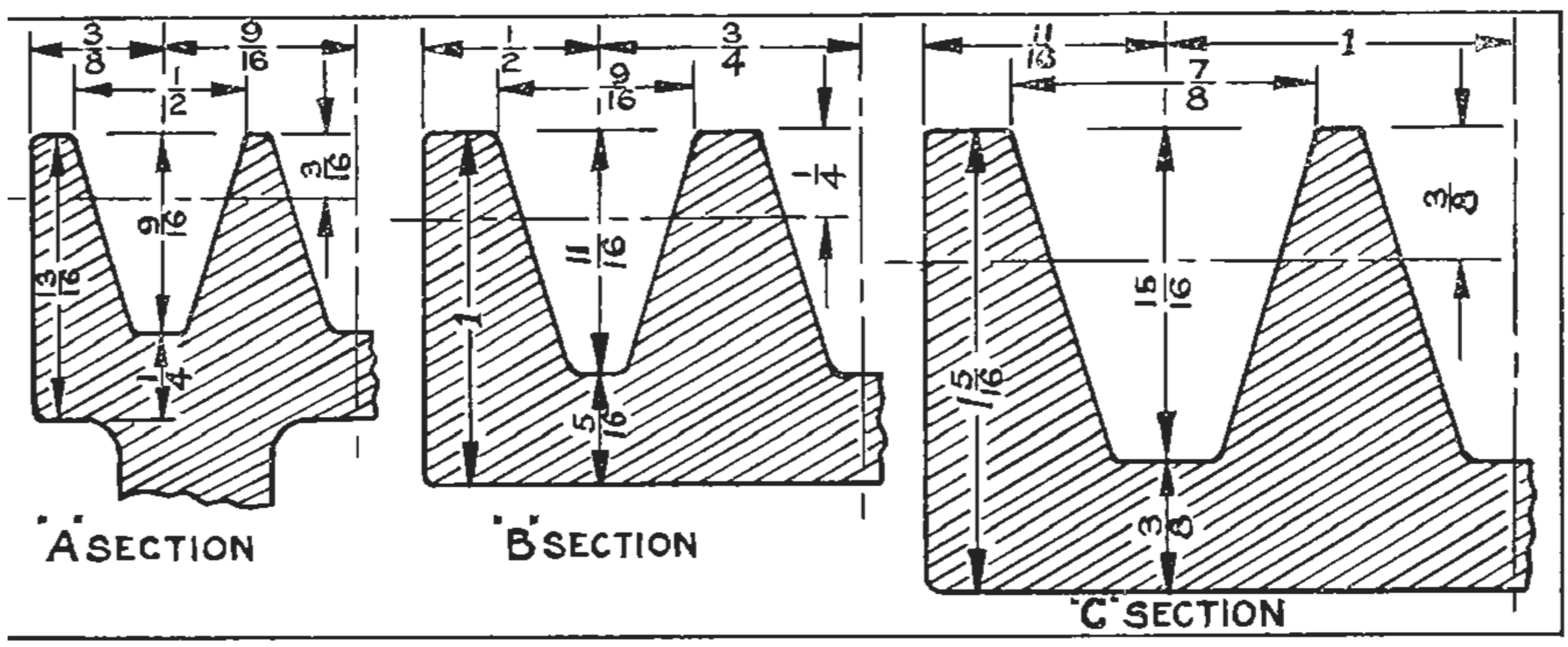


Fig. 184 Standard Vee Pulley Dimensions

Pulley diameters for Vee belts are calculated on pitch diameters, and belt lengths indicate the pitch length of the belt. To obtain the pitch diameter of Vee pulleys ⅜″ is subtracted from the outside diameter for "A" section, ½″ for "B" section, and ¾″ for "C" section pulleys.

Where the ratio of pulley diameters is greater than 3 to 1 a Vee to flat drive is sometimes applied, using a flat face on the larger pulley. In such cases the effective pitch diameter of the flat pulley is determined by adding 0.31″ to the diameter for "A" section, 0.39″ for "B" section, and 0.47″ for "C" section belts.

## Chain Sprockets

Roller chain drives give a positive and extremely efficient form of power transmission, being light and more compact than belting, though lacking some of the cushioning effect of a belt.

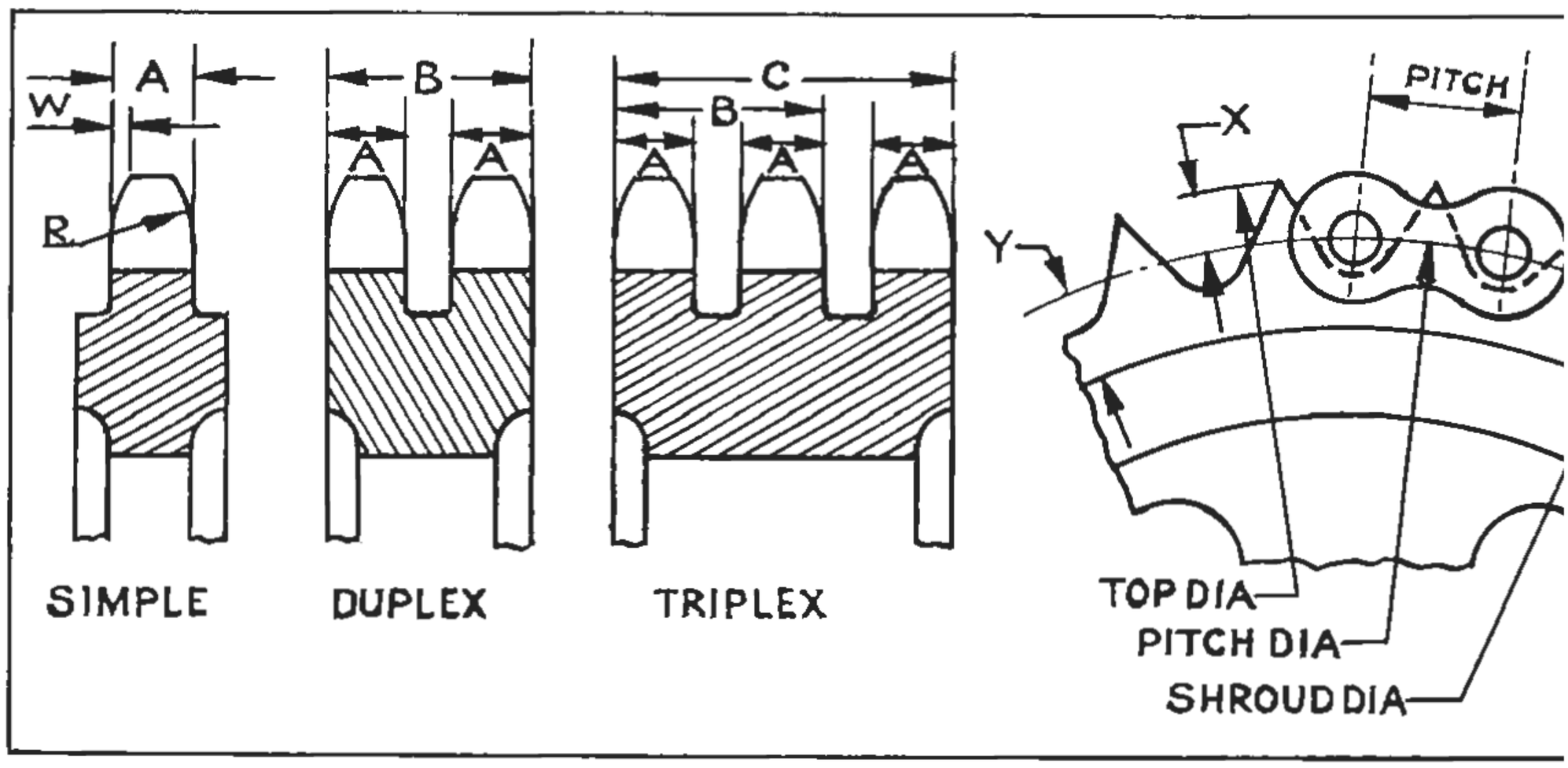


**Fig. 185 Roller Chain Sprocket Dimensions for British Standard Chains**

The principal characteristics of a roller chain are pitch, roller diameter an distance between the inner plates. Dimensions of the sizes of chain in commo use, together with formulae for calculating chain sprocket dimensions, are give below:

$$\text{Pitch Dia.} = \text{pitch} \div \sin\left(\frac{180^\circ}{\text{No. of teeth}}\right)^\circ$$

$$\text{Top Dia.} = \text{Pitch dia.} + 2X \text{ (Table 11)}$$

$$\text{Shroud Dia.} = \text{Pitch dia.} - 2Y \text{ (Table 11)}$$

## Table 11 Chain Sprocket Dimensions

| PITCH | 3/8" | 1/2" | 1/2" | 1/2" | 5/8" | 3/4" | 1" |
|---|---|---|---|---|---|---|---|
| Inside Width | ·225 | ·130 | ·192 | ·305 | ·380 | ·460 | ·670 |
| Roller dia. | ·250 | ·305 | ·305 | ·335 | ·400 | ·475 | ·625 |
| A Max. | ·210 | ·117 | ·176 | ·285 | ·356 | ·433 | ·635 |
| Min. | ·201 | ·110 | ·168 | ·275 | ·345 | ·420 | ·618 |
| B Max. | ·613 | — | — | ·833 | 1·009 | 1·199 | 1·890 |
| Min. | ·604 | — | — | ·823 | ·998 | 1·186 | 1·873 |
| C Max. | 1·016 | — | — | 1·381 | 1·662 | 1·965 | 3·145 |
| Min. | 1·007 | — | — | 1·371 | 1·651 | 1·952 | 3·128 |
| W | ·038 | ·035 | ·035 | ·050 | ·063 | ·075 | ·10 |
| R | ·375 | ·5 | ·5 | ·5 | ·625 | ·75 | 1·00 |
| X | ·080 | ·136 | ·136 | ·105 | ·152 | ·184 | ·255 |
| Y Min. up to 19T | ·244 | ·245 | ·245 | ·320 | ·325 | ·402 | ·490 |
| 20T & over | ·224 | ·245 | ·245 | ·300 | ·325 | ·402 | ·490 |

## Gearing

A gear is a toothed wheel which when meshed with other gears transmits motio from one part of a mechanism to another. Of the many different types of gear the most commonly encountered is the spur gear, Fig. 186, which consists of wheel having teeth cut around its periphery parallel to the axis and is employe to transmit motion between parallel shafts.

In specifying the pitch of gear teeth there are three methods in common use:

**DIAMETRAL PITCH (DP)** indicates the number of teeth per inch of pitch circle diameter; thus a gear of 1 inch pitch circle diameter and having 24 teeth would have a diametral pitch of 24.

**CIRCULAR PITCH (CP)** is the distance, in inches, between corresponding points on two adjacent teeth measured along the pitch circle.

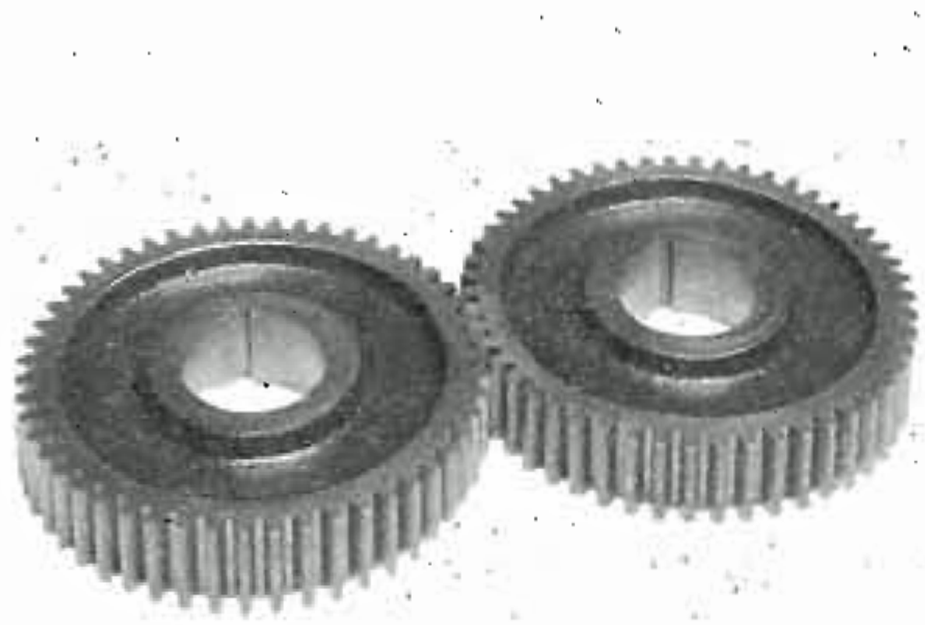

Fig. 186 Spur Gears

**MODULE (M)** is the reciprocal of the diametral pitch and is used to specify the pitch of gears cut to metric dimensions where it indicates the metric or millimetre module.

Rules for calculating the dimensions of standard involute spur gears are as follows:

| | | |
|---|---|---|
| Circular Pitch | = | $\frac{3.1416}{\text{D.P.}}$ |
| Diametral Pitch | = | $\frac{3.1416}{\text{C.P.}}$ |
| Module (Metric) | = | $\frac{25.4}{\text{D.P.}}$ |
| Pitch Diameter | = | $\frac{\text{No. of teeth}}{\text{D.P.}}$ |
| Centre Distance | = | $\frac{\text{Total No. of teeth in both gears}}{2\text{xD.P.}}$ |
| Outside Diameter | = | $\frac{\text{No. of teeth} + 2}{\text{D.P.}}$ |
| Addendum | = | $\frac{1}{\text{D.P.}}$ |
| Working Depth | = | $\frac{2}{\text{D.P.}}$ |
| Whole Depth | = | $\frac{2.250}{\text{D.P.}}$ (British Std.), $\frac{2.157}{\text{D.P.}}$ (B. & S. system) |

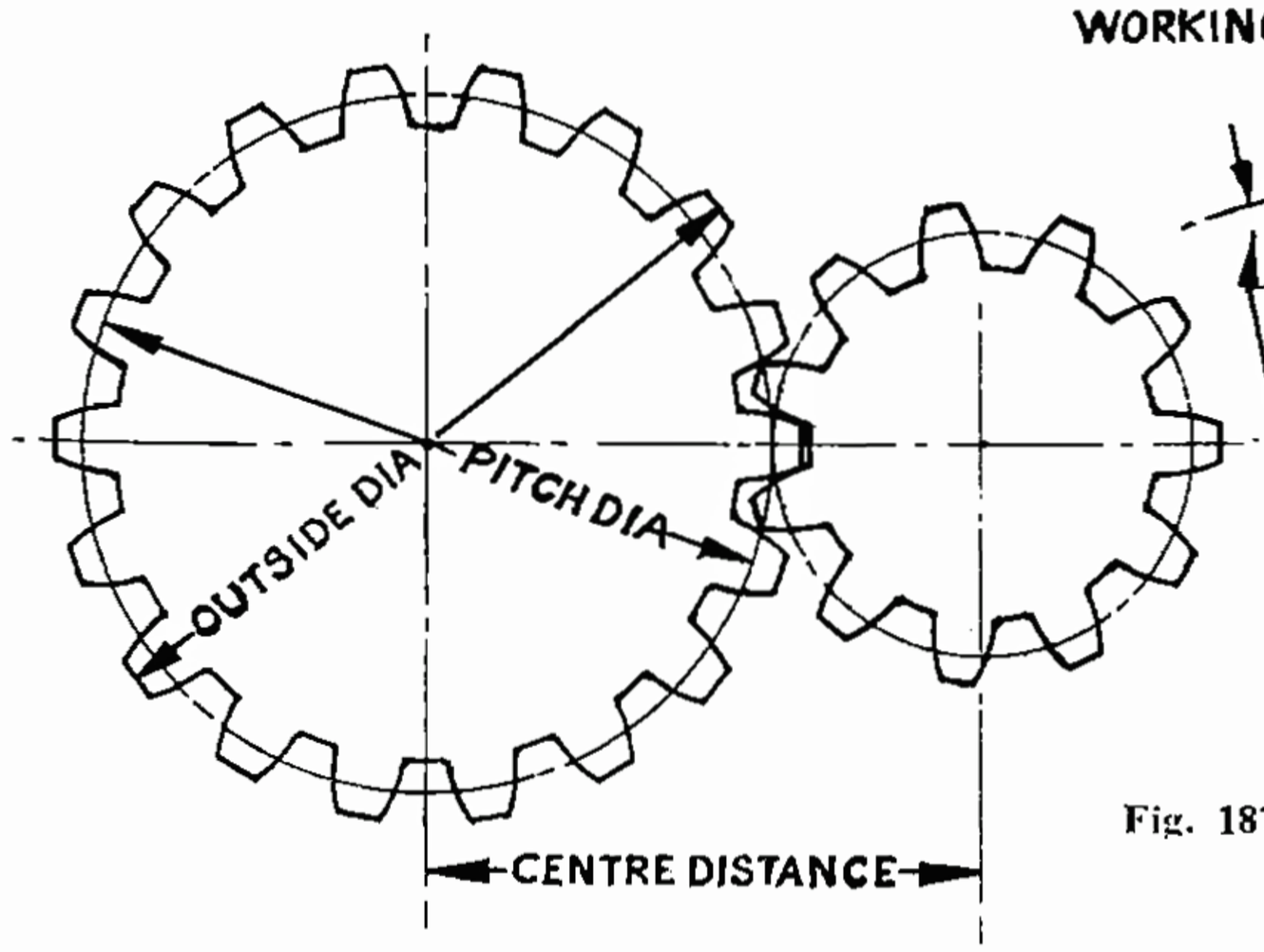


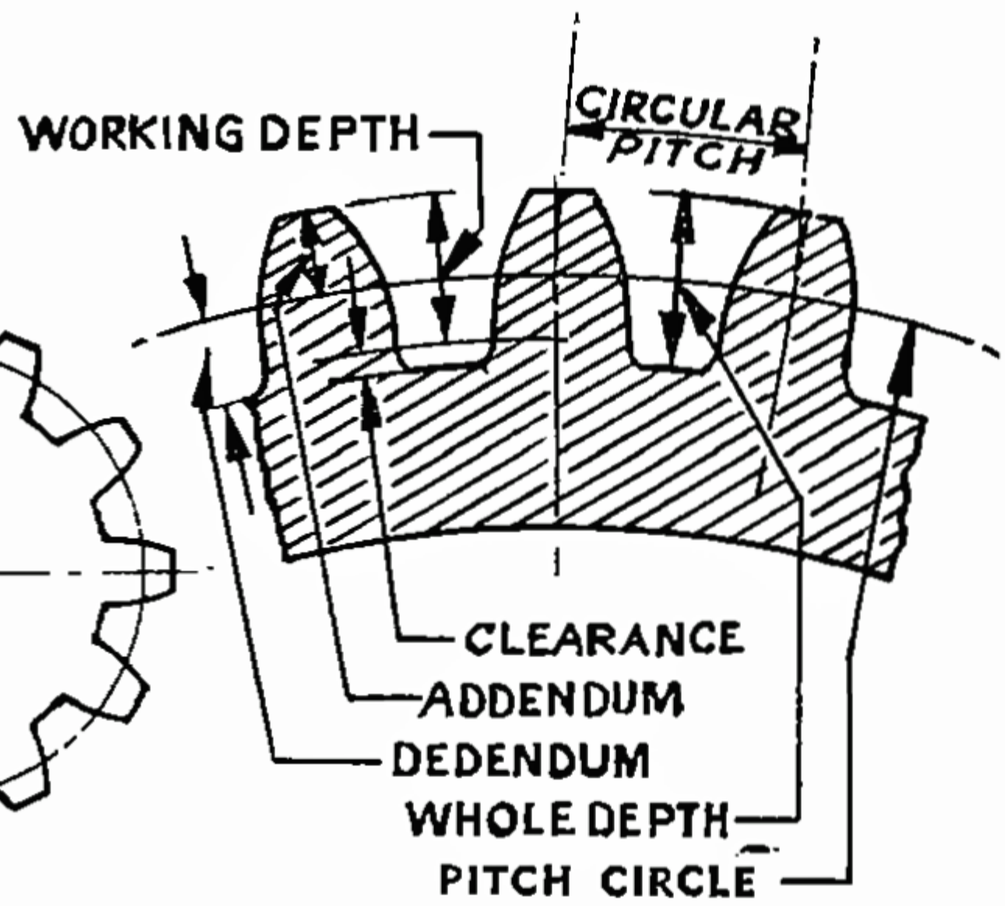


Fig. 187 Gear Teeth Nomenclature

## Helical Gears

"Helical" or "Spiral" gears are gears having teeth cut on a cylindrical surface but inclined at an angle to the axis of rotation. Helical gears operate more quietly and smoothly than spur gears by virtue of their sliding action, but have the disadvantage of setting up end thrusts in the shafts which must be accommodated by suitable thrust bearings.

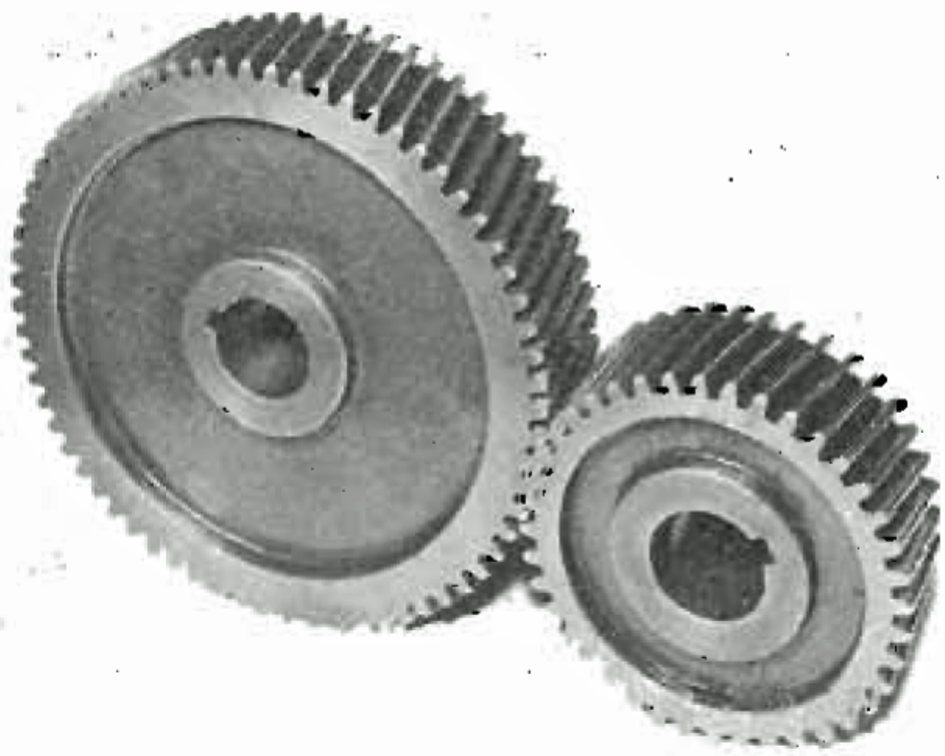

Fig. 188 Helical Gears

Fig. 189 Spiral Gears

Gears of this type may be used to connect parallel shafts, as per Fig. 188, in which case their helix angles must be equal in magnitude and of opposite hand, or to connect shafts inclined at an angle to each other, as per Fig. 189, in which case the helix angles must be of the same hand and together make up the angle between the shafts.

As a general rule, gears for driving parallel shafts are referred to as helical gears, while gears connecting non-parallel shafts are referred to as spiral gears.

Rules for calculating the dimensions of helical gears are as follows:

$$\text{Pitch Dia.} = \frac{\text{No. of teeth}}{\text{D.P.} \times \text{Cosine Helix Angle}}$$

$$\text{Centre distance} = \frac{\text{Total No. of teeth in Both Gears}}{2 \times \text{D.P.} \times \text{Cosine Helix Angle}}$$

$$\text{Outside Dia.} = \text{Pitch Dia.} + 2/\text{D.P.}$$

Other formulae are as for spur gears, page 79. Unless stated otherwise, the pitch of a helical gear is always taken as being measured normal to the helix angle.

## Bevel Gears

Bevel gears have teeth which lie on a conical surface, radiating from the apex of a cone, and are used to transmit motion between shafts at an angle to each other, as per Fig. 190. A set of bevel gears is developed on adjacent cones having a common vertex, as in Fig. 190. These are known as pitch cones, and pitch cone angles are determined by the ratio

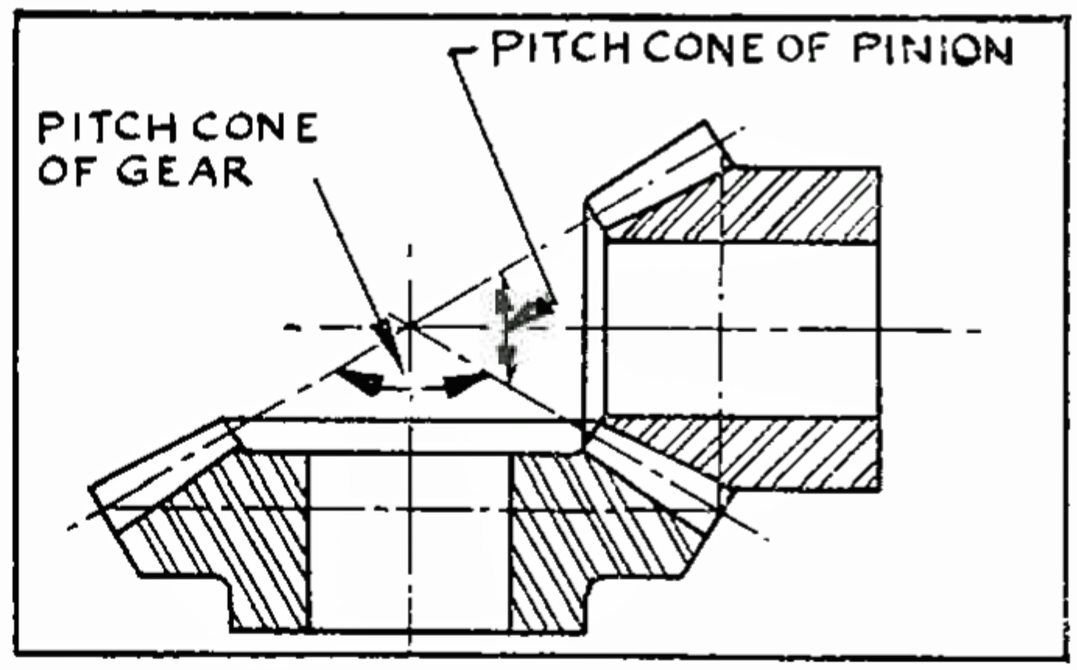


Fig. 190 Bevel Gears

between the number of teeth in gear and pinion. A pair of mating gears having a 1 to 1 ratio and designed to run at 90° are known as mitre gears, and are one of the commonest forms of bevel gears. Fig. 191 shows the meanings of the principal terms used in giving the dimensions of bevel gears. Rules for calculating the dimensions of bevel gears for shafts intersecting at 90° are set out below:

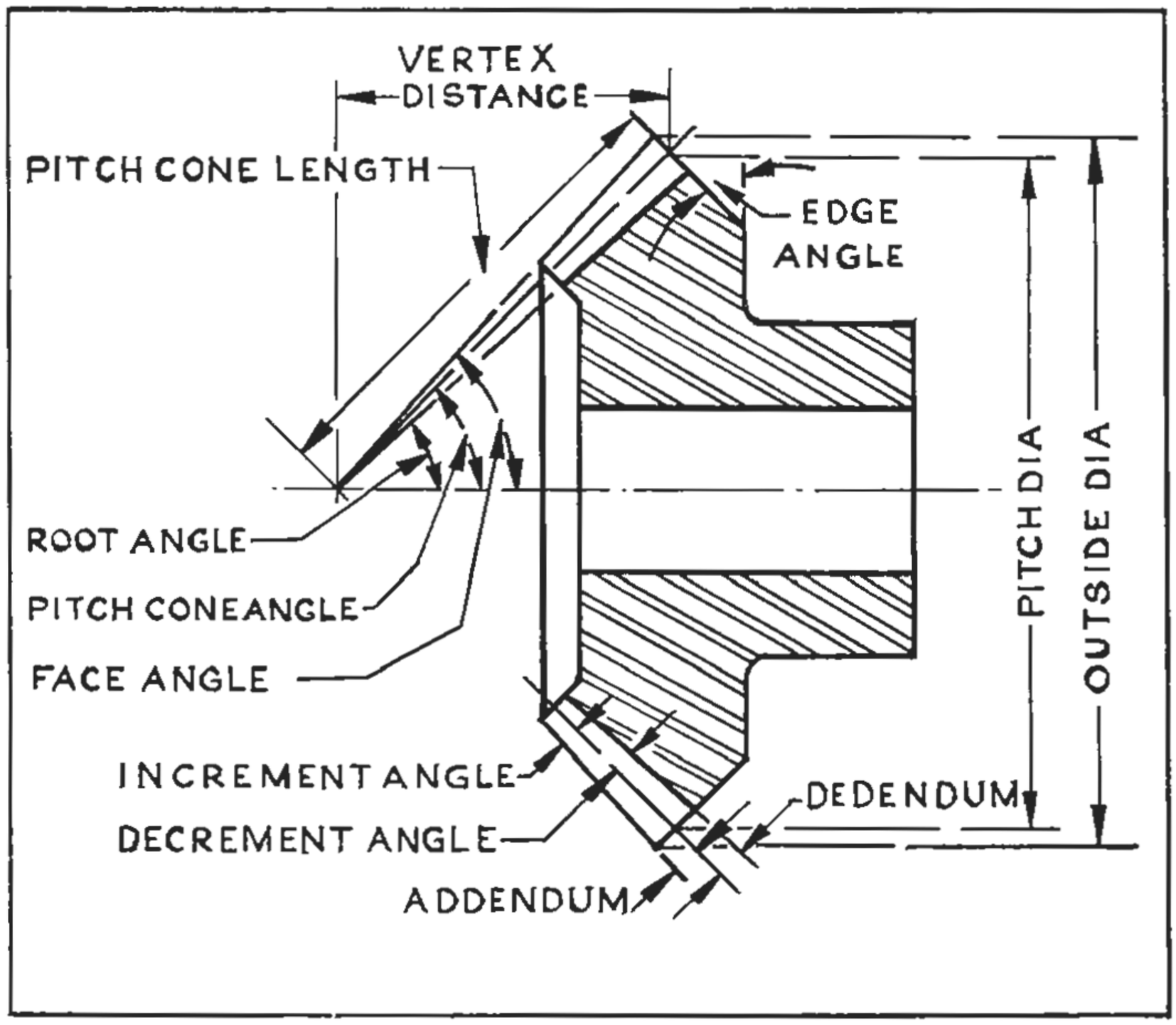


**Fig. 191 Bevel Gear Nomenclature**

$$\text{Tan. Pitch Cone Angle (Gear)} = \frac{\text{No. of teeth in Gear}}{\text{No. of teeth in Pinion}}$$

$$\text{Tan. Pitch Cone Angle (Pinion)} = \frac{\text{No. of teeth in Pinion}}{\text{No. of teeth in Gear}}$$

$$\text{Pitch Cone Length} = \frac{\text{Pitch Dia.}}{2 \times \text{Sine Pitch Cone Angle}}$$

$$\text{Tan. Increment Angle} = \frac{\text{Addendum}}{\text{Pitch Cone Length}}$$

$$\text{Tan. Decrement Angle} = \frac{\text{Dedundum}}{\text{Pitch Cone Length}}$$

$$\text{Face Angle} = \text{Pitch Cone Angle} + \text{Increment Angle}$$

$$\text{Root Angle} = \text{Pitch Cone Angle} - \text{Decrement Angle}$$

$$\text{Edge Angle} = \text{Pitch Cone Angle}$$

$$\text{Vertex Distance} = \frac{\text{No. of teeth in Mating Gear}}{2 \times \text{D.P.}}$$

$$\text{Outside Dia.} = \text{Pitch Dia.} + 2 \text{ Cos Pitch Cone Angle} \times \text{Addendum}$$

The addendum, dedendum and pitch diameter of bevel gears are calculated as for spur gears. As a general rule the face width of bevel gears should not exceed one-third of the pitch cone length.

## Cutting Lubricants

Cutting lubricants are employed to control the heat generated during metal cutting operations, and in so doing to minimise tool wear and distortion of the workpiece. In order to accomplish this the fluid employed must perform the following functions: It must lubricate the contacting surfaces of the chip and tool to minimise friction and thus reduce heat and tool wear. It must provide anti-welding properties to prevent galling, or transfer and subsequent adhesion of metal particles to the tool and workpiece. It must cool the tool to minimise abrasive wear, which is aggravated by high temperature, and cool the workpiece to prevent distortion by localised heating. In addition it must prevent rusting or other adverse affects on the workpiece or machine, and contain no substances harmful to the operator.

The various cutting oils in common use fall into two distinct classes, soluble oils and straight mineral oils. Soluble oils are mineral oils which have been so treated that when added to water they yield an emulsion which serves as an excellent and inexpensive coolant. Soluble oils are superior to straight mineral oils as coolants, but inferior in their lubricating qualities. Despite their being mixed with water they have the capacity for leaving a rust-resisting film on metal surfaces and are an ideal coolant for most types of lathe work.
Straight mineral cutting oils consist of mineral oils blended with varying amounts of sulphurised or chlorinated oils and other chemical compounds. These oils have superior lubricating and anti-welding qualities to soluble oils, and are used on work of an extremely precise or arduous nature. They may be used to advantage on lathe work when screwing threads in hard alloy steels or when an extremely fine finish is required.

## Steel

Steel is manufactured in a vast number of grades, each having a different alloy content and being designed for a different purpose. The following pages give a brief summary of the machinability, characteristics and uses of the types of steel most commonly encountered in lathe work.

## Bright Steels

Bright steel is the term used to describe steel which has been finished by a cold rolling or drawing process, and hence has a smooth, regular surface as distinct from the scaled surface found on BLACK STEELS or steel finished by hot rolling processes. While it is possible to cold finish any grade of steel, this is in practise generally confined to two main types: "Free Cutting Steels" and "Bright Shafting".

**FREE CUTTING STEELS** are steels containing varying percentages of sulphur and/or lead to give free machinability. They have comparatively low tensile strengths ranging from 20-24 tons square inch, and are used principally for items of small size where free machining and ease of production are essential and high strength or good wearing qualities are not called for. By virtue of its low carbon content free cutting steel is suitable for case hardening where high core strength is not required.

**BRIGHT SHAFTING** is produced in several grades with tensile strengths ranging from 25-45 tons per square inch, and having much greater strength and superior wearing qualities to free cutting steel but being more difficult to machine. Bright shafting is used principally in applications such as transmission shafts and machine spindles where it is required to fit pulleys, bearings, etc., without preliminary machining as would be necessary with "black" or hot finished steels.

**MILD STEEL** is the simplest and plainest form of steel, having a comparatively low proportion of carbon or other ingredients. It is one of the cheapest forms of steel, and is used where a high strength-weight ratio is not required, or where added strength can be gained through increased size without inconvenience. Mild steel has slightly greater strength and better wearing qualities than free cutting steel, but due to its soft and tenacious nature does not machine easily. Mild steel is suitable for case-hardening where a high core strength is not required.

**MEDIUM CARBON STEELS** contain from .35% to .5% carbon with .5% to .8% manganese, and are amongst the most popular and versatile of machinery steels. The tensile strength of medium carbon steels ranges from 30 to 50 tons per square inch, and this may be increased considerably by suitable processes of heat treatment. These steels are used for gears, spindles, screws, etc., requiring greater strength and wear resistance than mild steel but where the expense of high tensile alloy steel is not warranted. Despite their superior strength, medium carbon steels are of a much crisper nature than mild steel and are hence comparatively readily machinable.

**SPRING STEELS** contain from .5% to .7% carbon with like amounts of manganese. They have superior strength and wear resistance to the medium carbon steels but are much harder and difficult to machine. Spring steels, with suitable heat treatment, are used for springs, keys, dowel pins, chisels, axes, etc.

**CARBON TOOL STEELS** contain from .7% to 1.2% carbon, which renders them suitable for hardening by the simple process of heating to above a certain temperature and cooling rapidly. Carbon tool steels are more difficult to machine than the lower carbon steels, and require much lower cutting speeds. They are used for such applications as drills, taps, files, ball bearings, wear plates, lathe centres, etc.

**ALLOY STEELS,** in addition to varying percentages of carbon, contain appreciable amounts of other metals such as nickel, chromium, molybolenum, vanadium, etc.

**HIGH TENSILE STEELS** are alloy steels designed for applications calling for high strength and resistance to shock or fatigue. They are produced in several grades, with tensile strengths ranging up to approximately 80 tons per square inch in the heat-treated condition. Heat treatment of these steels is carried out prior to machining. In this condition, while extremely hard, they machine very cleanly and give an excellent finish due to their crisp nature, but have a tendency to distort badly during early machining operations.

**ALLOY CASE HARDENING STEELS** are alloy steels with a very low carbon content, which makes them suitable for case hardening. They are used for applications requiring a high surface hardness together with a strong ductile core. In their annealed state these steels are comparatively soft and freely machinable, while after heat treatment the core machines similarly to high tensile steels.

## Heat Treatment

The physical properties of many types of steel may be controlled and changed almost at will by subjecting them to proper processes of heat treatment. In some instances, notably the plain carbon steels, the procedure is a simple one which may be carried out in a blacksmith's hearth or with a welding torch, while in others, notably the high tensile steels, it is a complicated treatment involving scientific knowledge and equipment. Fundamentally there are two reasons for heat treating steel; to harden it, or to soften it, and almost every heat treatment process falls into one or other of these categories.

**ANNEALING** is a process of softening a piece of steel in order to meet particular physical requirements; to make it more easily machinable, to relieve internal stresses from previous operations such as forging or bending, or when it is necessary to re-machine a piece of steel that has been hardened. Annealing is carried out by heating the steel slowly to a point above its usual hardening temperature, holding it at that temperature for sufficient time to allow the heat to spread evenly, followed by a slow cooling, preferably in the fire or furnace. Approximate annealing temperatures for plain carbon steels are as follows:

| | |
|---|---|
| Low Carbon (Mild) Steels | 870 – 920° C |
| Medium Carbon Steels | 830 – 880° C |
| Spring Steels | 790 – 840° C |
| Carbon Tool Steels | 750 – 800° C |

**HARDENING** or **REFINING** of the plain carbon steels is carried out by heating to a point above the critical temperature range of the steel and then cooling rapidly by quenching in water or oil. Hardening temperatures vary with the composition of the steel and range from 760° C for high carbon tool steels to 880° C for the lower of the medium carbon steels. Hardening leaves the steel in its hardest and most brittle condition with little strength or resistance to shock. This is overcome by tempering.

**TEMPERING** is a process whereby a certain degree of hardness is sacrificed in order to reduce brittleness and increase toughness and durability. This is accomplished in high carbon steels by re-heating after hardening to a temperature between 170° C and 350° C, the actual temperature depending on the purpose for which the steel is to be used.
Where proper furnaces and temperature measuring equipment are not available, hardening and tempering temperatures may be judged approximately by colour, as set out in Table 12. Before tempering it is necessary to polish a portion of the surface free from hardening scale and oil stains to allow the colour of the oxide film to show.

## Table 12 Heat and Temper Colours

| COLOUR In dull light | APPROX. TEMP. °C | °F | COLOUR | APPROX. TEMP. °C | °F |
|---|---|---|---|---|---|
| Brown Red | 565 | 1049 | Faint Straw | 205 | 400 |
| Dull Red | 680 | 1256 | Straw | 225 | 440 |
| Blood Red | 730 | 1346 | Deep Straw | 245 | 475 |
| Medium Cherry | 750 | 1382 | Bronze | 270 | 520 |
| Cherry Red | 780 | 1436 | Purple | 280 | 540 |
| Bright Cherry | 825 | 1517 | Full Blue | 295 | 563 |
| Full Red | 850 | 1562 | Light Blue | 310 | 590 |
| Yellow Red | 950 | 1742 | Grey | 330 | 626 |
| Orange | 1050 | 1922 | | | |
| White | 1300 | 2372 | | | |

## Table 13 Tempering Chart for Carbon Tool Steels

| DEGREES C | | DEGREES F |
|---|---|---|
| 300 | Springs | 572 |
| 295 | Wood Saws | 563 |
| 290 | Screwdrivers, Spanners, Crowbars | 554 |
| 285 | Moulding, Cutters for Softwood, Needles | 545 |
| 280 | Cold Chisels, Firmer Chisels, Bone and Ivory Saws | 536 |
| 275 | Axes and Adzes, Hot Setts | 527 |
| 270 | Dental and Surgical Instruments, Press Tools | 518 |
| 265 | Twist Drills, Coopers Tools | 509 |
| 260 | Reamers, Punches, Dies, Plane Irons, Gouges | 500 |
| 255 | Picks, Rock Chisels, Moulding Cutters for Hardwood | 491 |
| 250 | Taps, Chasers, Screw Cutting Dies | 482 |
| 245 | Leather Cutting Dies, Rock Drills | 473 |
| 240 | Milling Cutters, Bone Cutting Tools | 464 |
| 235 | Wood-Engraving Tools, Paper Cutters | 455 |
| 230 | Hammer Faces, Planer and Shaper Tools, Brass Screwing Dies | 446 |
| 225 | Scrapers, Lathe Tools, Steel Engraving Tools | 437 |
| 220 | Files, Gauge Blocks | 428 |

For tool steels the efficiency of hardening may be checked with a file. If the file slides over the surface without "catching" a high degree of hardness is indicated; if however the file "bites" readily it is a sign that little or no hardening of the steel has been achieved. The most frequent cause of incomplete hardening is quenching from too low a temperature. The use of excessively high hardening temperatures as a means of avoiding this failing is not, however, to be recommended, as this can result in a coarse, brittle grain structure, cracking and excessive distortion. An indication of recommended tempering temperatures for high carbon steels is given in Table 13.

Medium carbon steels, while they will not harden to anything like the same extent as high carbon steels, may nevertheless be given a considerable degree

of extra strength and toughness by suitable hardening and tempering. Tempering of medium carbon steels is carried out at temperatures ranging from 550° to 650° C. These steels are still machinable in the heat-treated condition, and heat treatment is therefore usually carried out prior to finish machining operations.

## Case Hardening

Case hardening is applied by giving a high carbon content to the surface of a low carbon steel so that normal hardening processes result in a hardened case overlying a tough, ductile core.

Carburising of the case is achieved by heating in a closed container with a suitable carburising compound which will give up carbon when subjected to heat whilst protected from the atmosphere. Carburising mediums in common use consist of various mixtures of animal and vegetable products rich in carbon, such as charred leather and wood charcoal blended with chemicals such as barium carbonate. The actual cementation of the steel is performed by the gases, particularly carbon monoxide, given off by these mixtures under heat.

Carburising is carried out at a temperature of 900–930° C. The length of time necessary to obtain the desired depth of case is dependent on the rate of carbon penetration, which varies with the composition of the steel and type of hardening compound employed. This must be found by experiment, being most easily ascertained by quenching and fracturing small-diameter test pieces. Once the desired depth of penetration has been reached, the material is allowed to cool slowly, leaving the case still in a soft condition.

Final hardening of the case is achieved by quenching from a temperature of 760–780° C, as for a high carbon tool steel. Very highly stressed parts made from alloy case-hardening steels are sometimes subjected to a double quenching process in order to attain a maximum of core strength. In such cases the first quenching is performed from a temperature of 800–850° C to refine the low carbon core and the second from 760–780° C to refine the high carbon case.

Alternatively, material to be case hardened may be carburised by immersion in a molten salt bath containing sodium cyanide. Carburising by this process takes place at a temperature of 850–900° C, and quenching is frequently done straight from the salt bath. This method of case hardening is employed principally for work requiring only a shallow depth of case. Sodium cyanide is poisonous and must be handled with care.

Parts of the surface on which hardening is not required may be left oversize by an amount equal to twice the case depth. After carburising this excess material is machined off, leaving a non-carburised surface which will be toughened but not hardened by subsequent quenching.

## Alloy Steels

The heat treatment of alloy steels is a much more exacting process than for carbon steels, and requires proper furnaces and temperature control equipment. Full instructions for heat-treatment of these steels are given by the steel manufacturers and should be strictly adhered to.

## High Speed Steel

The forging and heat treatment of high speed steel is also a specialised process requiring proper furnaces and equipment. For simple applications, however, such as lathe, planer, shaper or slotter tools, where only the end of the tool requires hardening, the forging and heat treatment may be carried out in a blacksmith's hearth.

Forging to shape is done at a temperature between 1100 and 1200° C. The piece should be reheated as often as is necessary to complete the work, which must not be carried out at any lower temperature.

To harden the point after forging, the nose of the tool is heated slowly with frequent turning until a temperature of 850° C (Full Red) is attained; the blast is then increased to raise it quickly to 1280° C. Approaching this temperature, oxide bubbles will be seen forming on the surface of the steel. As the correct temperature is reached these bubbles begin to run together, and at this point the tool should be quickly withdrawn from the fire and quenched in oil.

## Grinding Wheels

A grinding wheel consists basically of grains of abrasive material, which perform the grinding, and a bonding material which holds the grains together. The nature of a grinding wheel is therefore determined by both the type and size of the abrasive and the type and strength of the bond.

The principal types of abrasives in use are "Aluminium oxide" and "Silicon Carbide", each of which is produced in several forms. Aluminium oxide is used on mild, carbon, alloy and high-speed steels, wrought iron, hard bronzes and other materials of high tensile strength. Silicon carbide is used on cast iron, brass, aluminium, copper and other soft or brittle materials of low tensile strength.

Grain sizes of the abrasive material range from coarse 10–30 to medium 36–60, fine 70–180, and very fine 220–600. As a general rule coarser grain sizes are used for fast cutting and for soft materials. Fine grain sizes are used for hard materials or where a very fine finish is required.

The "grade" or hardness of the bond is signified by a letter, and ranges from soft "E-J", medium "K-O", and hard "P-Z". The grade used depends on the material to be ground, hard wheels being used for soft materials and soft wheels for hard materials. A wheel which is too hard for a particular purpose may be made to "act soft" by reducing its speed. Conversely, a too soft wheel may be made to "act hard" by increasing its speed.

The vitrified type of bond is the most widely used and is best suited for the majority of general grinding work. Under certain conditions, however, other types of bonding are desirable, notably resinoid and rubberised bonding for wheels subject to deflection strains or which must work at extremely high speeds. The following wheels are recommended as suitable for grinding lathe tool bits, etc.:

For use on power driven grinders A60MVBE.
For use on hand operated grinders A60MV.
For grinding tungsten carbide tipped tools (power driven grinders only) 39C60IV.

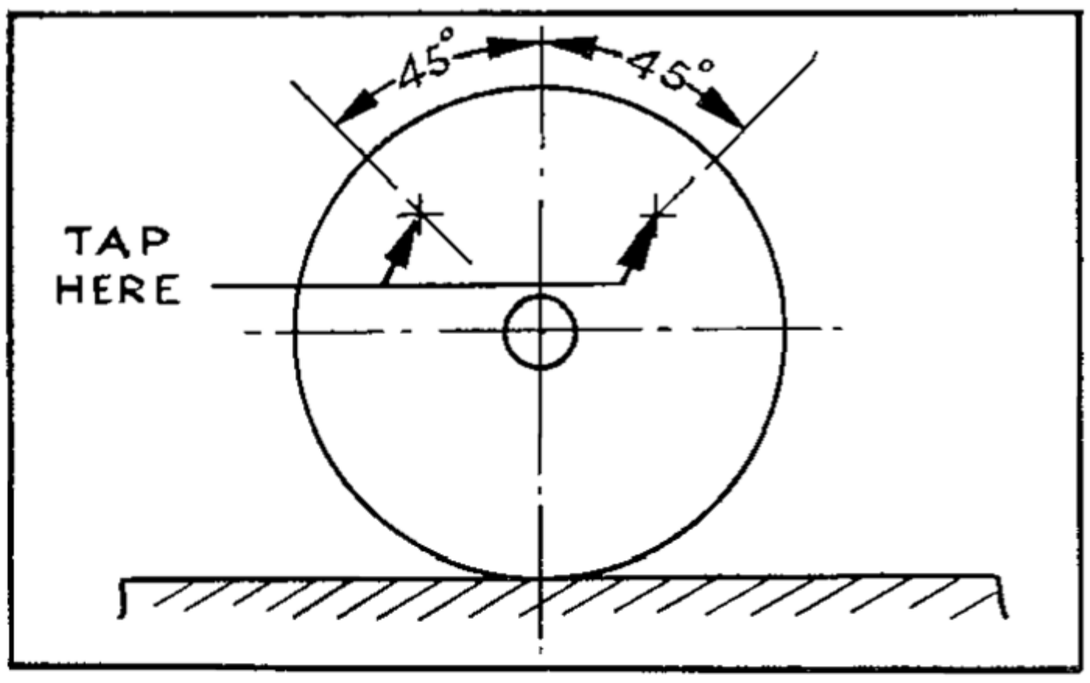


**Fig. 192 Testing a Grinding Wheel**

Before mounting a grinding wheel on a machine it should be "ring" tested, as shown in Fig. 192. The wheel is stood on edge on a clean hard floor, as illustrated, and tapped with a piece of hardwood at two points where shown. A sound wheel will emit a clear metallic tone; a cracked wheel will give a dead sound and not a clear ring. Cracked wheels are dangerous and should be discarded.

The maximum "safe operating speed" is marked on every wheel by the manufacturer and should never be exceeded.

CHAPTER ELEVEN

# PRACTICAL EXAMPLES

The following pages give a number of turning projects used at F. W. Hercus Pty. Ltd. for apprentice training purposes. These cover a representative range of lathe work such as might be encountered in an engineering workshop.

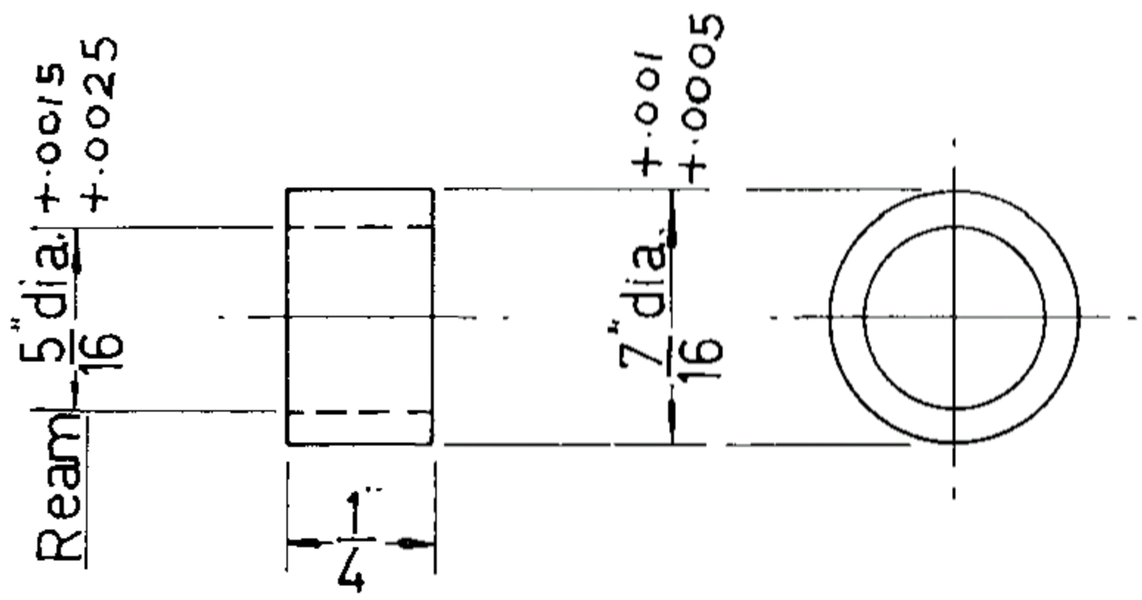


**Fig. 195 Bushing**

**Material:** ½″ dia. Bright Free Cutting Steel.

Measure the material to check that it is suitable for the job.

Hold in a collet with approximately 1″ protruding. Face the end, and drill 9/32″ diam. for approximately ¾″ deep. Rough turn the outside and bore to within approximately .005″ of size to a depth equal to twice the width of the job plus twice the width of the parting tool. Finish turn the outside to 7/16″ + .001 — + .0015 and ease it down to size with a fine file. Ream the bore to size, and break the sharp edge of the bore with a scraper at a slow spindle speed. Apply soluble oil to the reamer, using a brush.

Part off, part way through only (approximately .040″ deep), lightly break the sharp edges on each end with a file, then finish parting off. Remove the sharp edge of the bore with a hand scraper. Face the end and proceed to part off the second bushing as for the first.

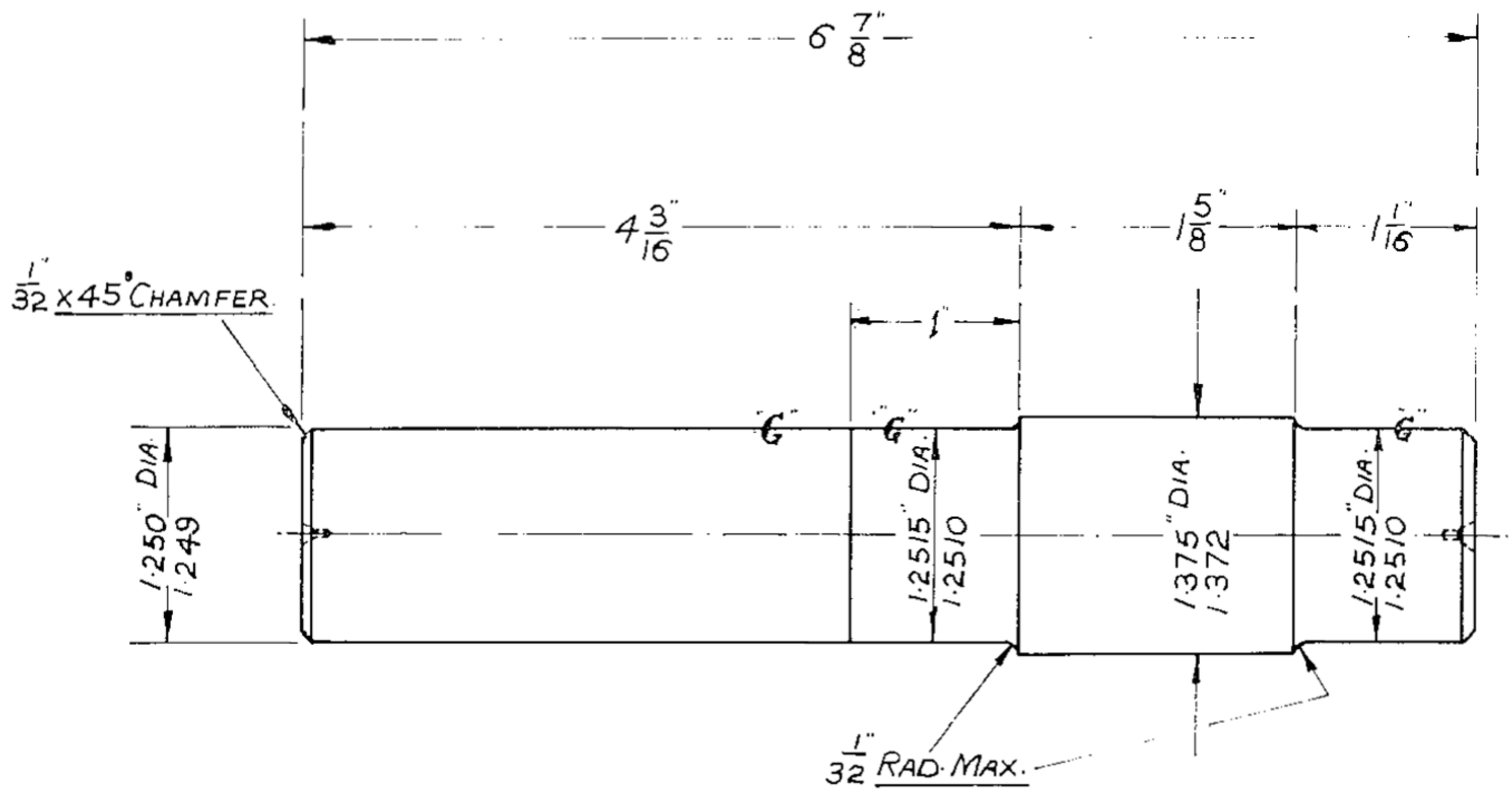


Fig. 196 Wheel Shaft

**Material:** Steel $1\frac{1}{2}''$ dia. S1045 (Medium Carbon).

Measure the material to see that it is suitable to produce the job.

Set up in a 4 jaw chuck, face and centre the end, (No. 3 Centre Drill) taking light cuts because of the length of overhang. Reverse in the chuck, face the second end to finished length and centre. Place some lubricant in the centre hole and support with the tailstock centre. Rough turn to 1.13/32" dia. for $2\frac{3}{4}''$ long, rough turn to 1.5/16" diam. for 1.1/32" long.

Remove from chuck, insert the headstock centre and check that it runs true. Clean the centre holes, set the job between centres, with the carrier on the 1.5/16" diam. and place some lubricant in the tailstock end centre hole.

Rough turn to approx. 1.9/32" diam. 4.3/16" long, finish turn to size plus .008" to .010" grinding allowance, chamfer the end and break the edges with a file. Mount the carrier on the finished $1\frac{1}{4}''$ diam. gripping over a strip of brass or copper wrapped around the job, to prevent damage. Clean the centre holes, place some lubricant in the tailstock centre and set the job between centres. Finish turn the $1\frac{1}{4}''$ diam. to finished length leaving .008" to .010" grinding allowance on diameter. Finish turn $1\frac{3}{8}''$ diameter to size, chamfer the end and break the sharp edges with a file.

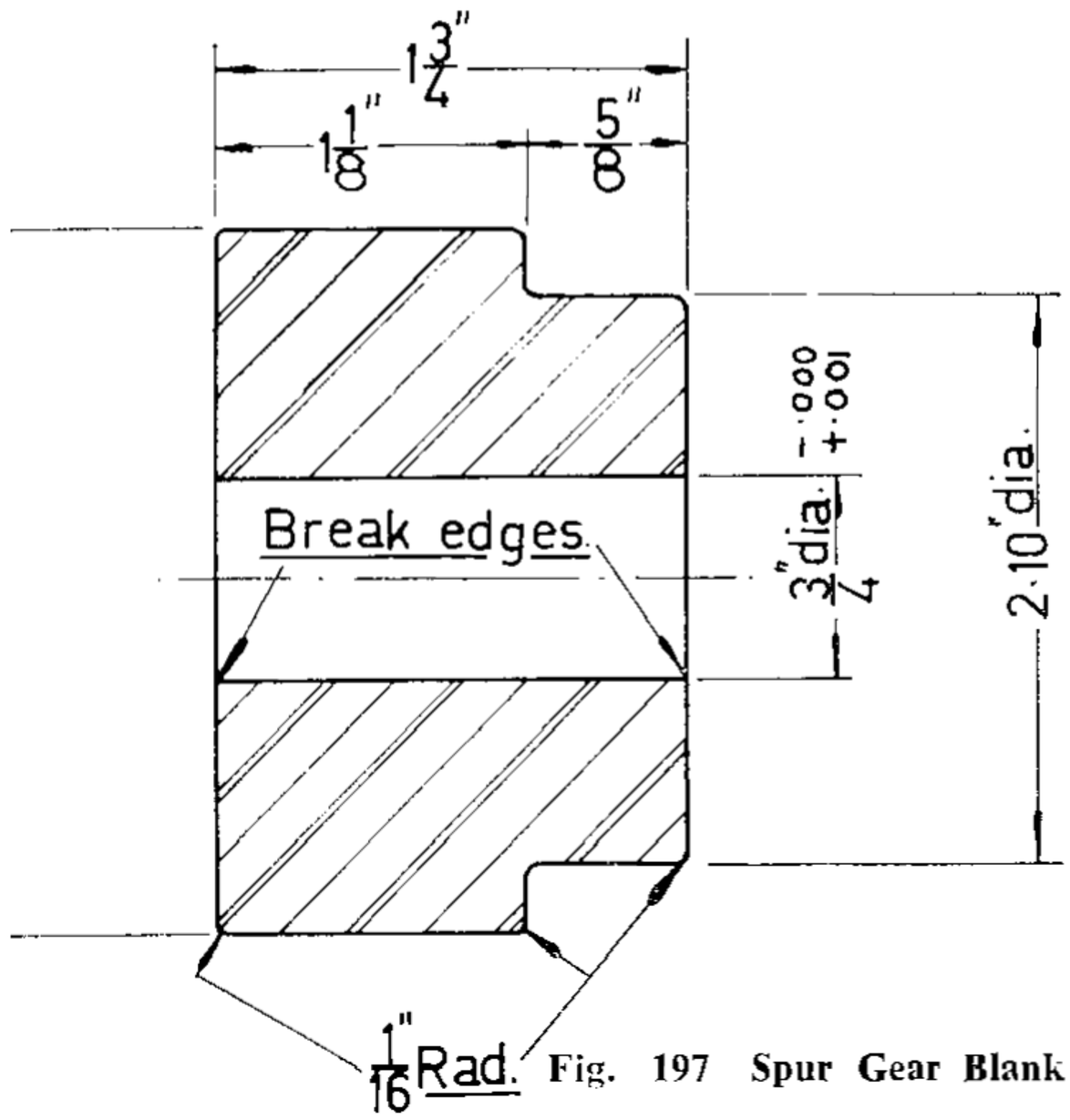

Fig. 197 Spur Gear Blank

**Material:** Steel S1045 (Medium Carbon).

Measure the piece of material to see that it is large enough to produce the job and decide if Method 1 or 2 should be used.

**METHOD 1.** This method may be used where the overall material size is reasonably close to the finished outside diameter and the ends are cut reasonably square.
Set up in a 4 jaw chuck, with approximately 3/16" to ¼" length of grip in the jaws. Drill the hole to ⅝" diam., applying soluble oil to the drill with a brush and withdrawing the drill at intervals to clear the chips. Rough turn the outside to 2.23/32" diam. to within approximately 1/16" of the chuck jaws.

Rough face the front to leave approximately 1/32" machining on the overall length over the lowest part of the face in the chuck. Rough turn the boss to within 1/16" of diameter, by taking a number of cuts, feeding towards the chuck. The length of the boss should be made to the drawing dimension at this stage so that it will remain the same after light finishing cuts have been taken over both the end of the boss and side of the gear.

Finish turn the boss to size and take light finishing cuts over the end of the boss and the side of the gear. Finish bore the hole to size or bore to .005" undersize and finish with a reamer if available. When reaming, use a slow spindle speed and apply soluble oil to the reamer with a brush. File a radius on the corner of the boss and at a slow spindle speed break the sharp edge of the bore with a scraper. Remove from chuck, lightly oil the bore and place on a mandrel with the boss towards the large end. Check that the headstock centre runs true. Clean the mandrel centre holes and place some lubricant in the tailstock end hole. Place between centres in the lathe and check that the mandrel runs true. Rough turn the face to within approx. .010" of thickness. Rough and finish turn the outside diameter. Finish turn the face, using a tool with very small nose radius to get as close as possible to the mandrel without actually running the tool into it, face outwards from centre. File radii on the corners of the gear. Remove the mandrel and break the sharp edge of the bore with a hand scraper.

**METHOD 2.** Alternative method where due to the material being cut off square on the ends or being very much larger than the finished size there would be too much stock left to be easily removed with the job mounted on a mandrel. Grip over the boss with approximately ½" length of grip in the jaws. Face the front off square to leave a small witness mark. Rough turn the outside to approximately 2.21/32" diam. for approximately 1" long, break the sharp corner with a file. Remove from chuck and proceed as with Method 1.

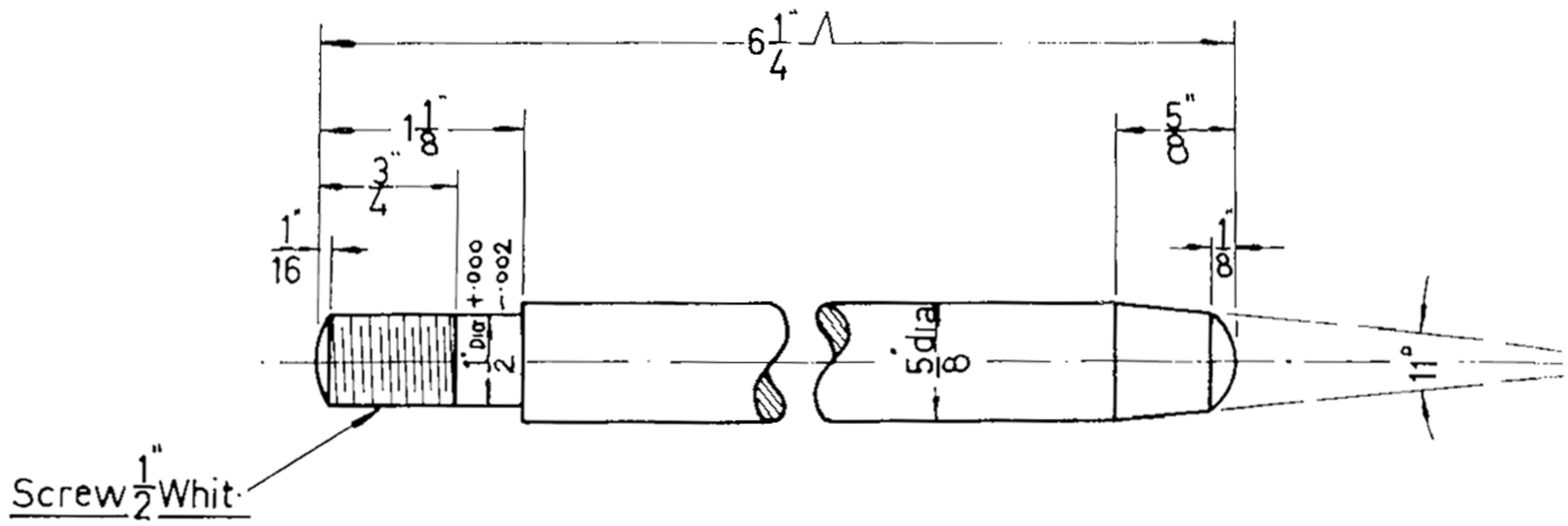


**Fig. 198 Moulding Box Pin**

**Material:** 5/8″ dia. Bright Free Cutting Steel

Measure the material to check that it is the correct diameter and long enough for the job.

Hold in a 3 jaw chuck with approximately $1\frac{1}{4}''$ protruding from the jaws. Set the compound rest to half of the included angle of the taper, and turn the tapered end. Form the domed end by free-hand working of saddle and cross feed handles, and finish with a file.

Reverse in the chuck with approximately $1\frac{3}{4}''$ protruding. Face to finished length. Turn the end to $\frac{1}{2}''$ diameter. Form the domed end by free-hand working of saddle and cross feed handles and finish with a file. Lightly break the sharp edge of the shoulder with a file.

Select and mount the required change wheels and screw the thread, using the chasing dial to determine the correct point for engaging the half nuts, and applying a straight cutting oil to the job using a brush.

Theoretical full depth of the thread = .640″ ÷ 12 = .054″. As the tool will have a point radius less than that theoretically required for Whitworth standard, to counteract spring in the tool and job and to allow the nut to screw on freely it will be necessary to feed the tool somewhat deeper than .054″. Take cuts at .020″, .034″, .044″, .050″, .054″, .057″, .059″ and .060″. On the second, third, fourth and fifth cuts only, the tool should be set sideways towards the headstock with the compound rest by approximately $\frac{1}{4}$ of the inward movement.

The thread should be finished by lightly rounding the crests of the thread with a file and taking one or more final cuts of .0005″ until the nut screws on.

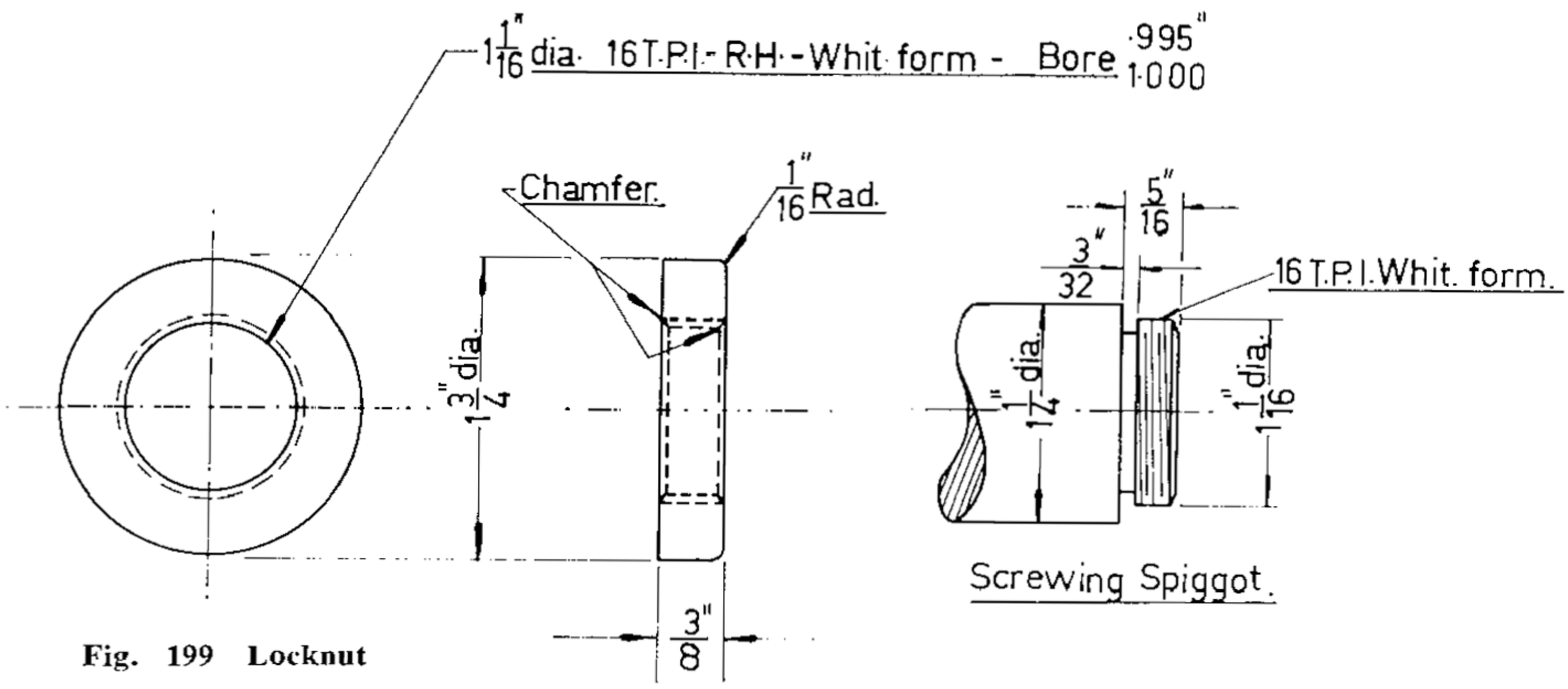


**Fig. 199 Locknut**

**Material:** $1\frac{7}{8}''$ Dia. Free Cutting Steel.

Measure the material to see that it is suitable for the job.

Grip in a 3 jaw chuck by approximately $\frac{1}{8}''$, and drill $\frac{5}{8}''$ diam. Face to just clean up, turn the outside to 1.49/64" diam. to within 1/32" of chuck jaws, rough bore to 15/16" and chamfer the bore to 1.1/16" diam. x 45°.

Reverse in the chuck, gripping by approximately $\frac{1}{8}''$, face to $\frac{3}{8}''$ + .010" wide, and turn the outside to 1.49/64" diam. Bore to .995" — 1.000" measuring with inside calipers set to a micrometer, and chamfer the bore to 1.1/16" diam. x 45°.

Set up the internal screwing tool, square and on centre and screw the thread. The theoretical double depth of thread for 16 T.P.I. Whitworth is 1.280" ÷ 16 = .080" so that theoretical root diam. = .9825" and theoretical depth of thread = .040". It is normal practice to enlarge the root diam. of an internal thread so as to reduce the actual depth of thread by approximately 20%. The theoretical depth from a .998" bore becomes .032". As the tool will have a point radius less than that theoretically required for Whitworth standard and to counteract spring in the tool it will be necessary to feed the tool somewhat deeper than .032". Take cuts at .012", .020", .026", .030", .032" and .034", followed by one or more cuts of .0005", until the gauge will begin to screw in. The thread may then be finished with one or more cuts taken at the same reading. While screw cutting, straight cutting oil should be applied to the tool using a brush.

After the thread has been finished a light facing cut (approximately .005") should be taken over the face and the corner lightly broken with a file. This face will now be perfectly square to the thread and hence is made the inside or "pressure" face. For this reason a very good finish is desirable and may be obtained by using a sharp facing tool, set nearly parallel to the face and feeding outward from the bore.

When all the nuts have been completed to this stage they must be finish turned on a screwed spigot. Grip a piece of $1\frac{1}{4}''$ diam. steel in the 3 jaw chuck with approximately 1" protruding from the jaws. Face the end, turn to 1.1/16" diam. for 5/16" long, and chamfer the corner. Face the shoulder flat and plunge a run out groove approximately 3/32" wide and 1/16" deep. Screw 16 T.P.I. Whit. to suit the nuts. Take cuts at .016", .024", .031", .036", .039", and .041", lightly round the crests with a file and finish with one or more light cuts until the nuts screw on. While screwing apply a straight cutting oil to the work using a brush.

The nuts are now screwed on to the spigot with the pressure face in. Finish turn the outside diam. to size, skim the back face to width, file the radius on the back corner and lightly break the corner of the pressure face.

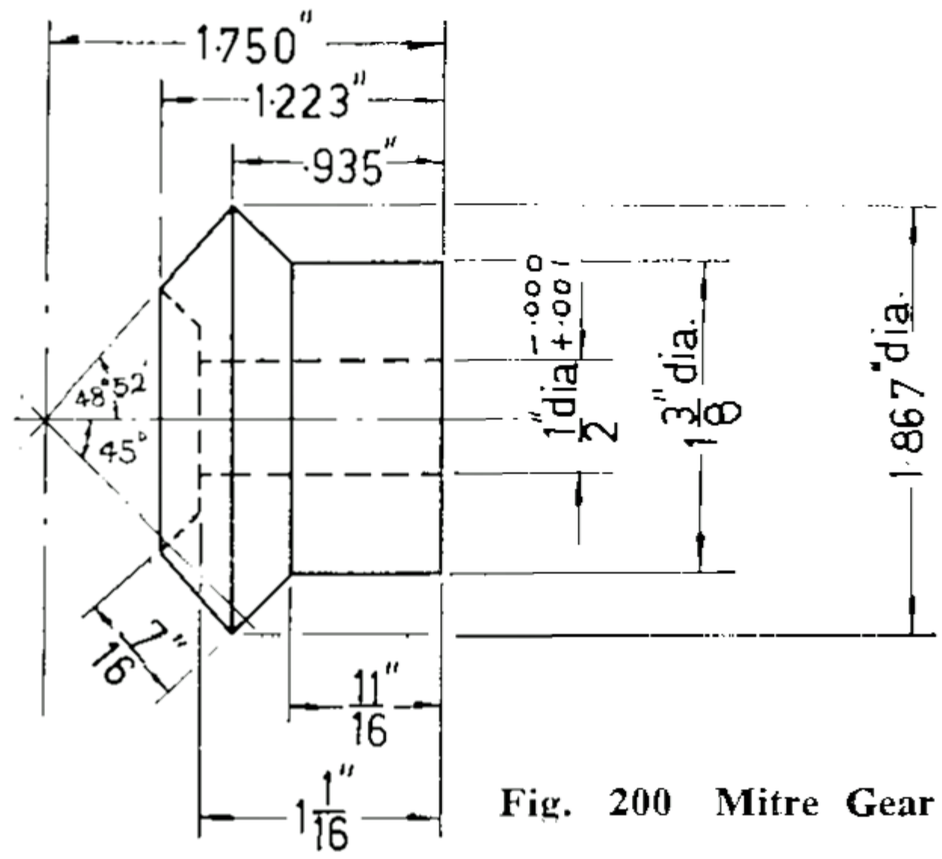


Fig. 200 Mitre Gear Blank

**Material:** Steel S1045 (Medium Carbon).

Measure the material to see that it is suitable for the job.

Set up in a 4 jaw chuck gripping over the gear end with approximately $\frac{3}{8}''$ length of grip in the jaws. Drill the hole 7/16″ diam., applying soluble oil to the drill with a brush and withdrawing it at intervals to clear the chips. Face, leaving approximately 1/16″ on the overall length and rough turn the boss to 1.7/16″ diameter.

Remove from the chuck and set up again, gripping by the boss with approximately 5/16″ length of grip in the jaws. Face the front to just clean up, rough and finish turn the outside to size (this diameter is important and must be within .002″, even if this is not called for on the drawing). Set the compound rest to the face angle of the gear (48° 52′), with the operating handle on the tailstock side as shown in Fig. 200a. Turn the face angle, taking cuts from the centre outwards until the full face width (7/16″) is reached.

The compound rest must now be re-set to turn inside angle of the recess in the front of the gear as shown in figure 200b. This angled face, line A is parallel to the back face of the gear, line B. The back face is normal to the pitch cone angle and so angle $\theta$ Figure 200b is equal to the pitch cone angle, in this instance 45°. Turn out the front recess by taking cuts outwards from the centre with the cross slide and out along the angled face with the compound rest as shown in Figure 200b until the correct depth is reached and the angled inside face meets the corner of the gear face at point C Figure 200b.

Finish bore the hole to size or bore to — .005″ and finish with a reamer, applying soluble oil to the reamer with a brush. Break the sharp edge at C and break the sharp edge of the bore with a scraper, using a slow spindle speed.

Remove from the chuck, lightly oil the bore and place on a mandrel with the boss toward the small end. Check that the headstock centre runs true. Clean the mandrel centre holes and place some lubricant in the tailstock end hole. Place between centres in the lathe and check that the mandrel runs true. Set the compound rest to turn the back angle as shown in Figure 200c. This angle

$\theta$ is equal to the pitch cone angle, in this case 45°. Turn the back angle, taking cuts from the outside inwards as shown by the arrow until the back face meets the corner of the gear face at point D. This point "D" is the datum point on a bevel gear from which all measurements are taken, so great care is necessary in this operation.

Face the end of the boss to finished length, using a tool with a very small point radius to avoid fouling the mandrel. The length of the boss is measured from the datum point D. This length is important since it controls the working position of the gear and so every care is necessary in this operation also. Finish turn the boss to size, break the corner of the boss with a file and very lightly take the sharp edge off the corner at the point D.

Remove from the mandrel and break the sharp edge of the bore with a hand scraper.

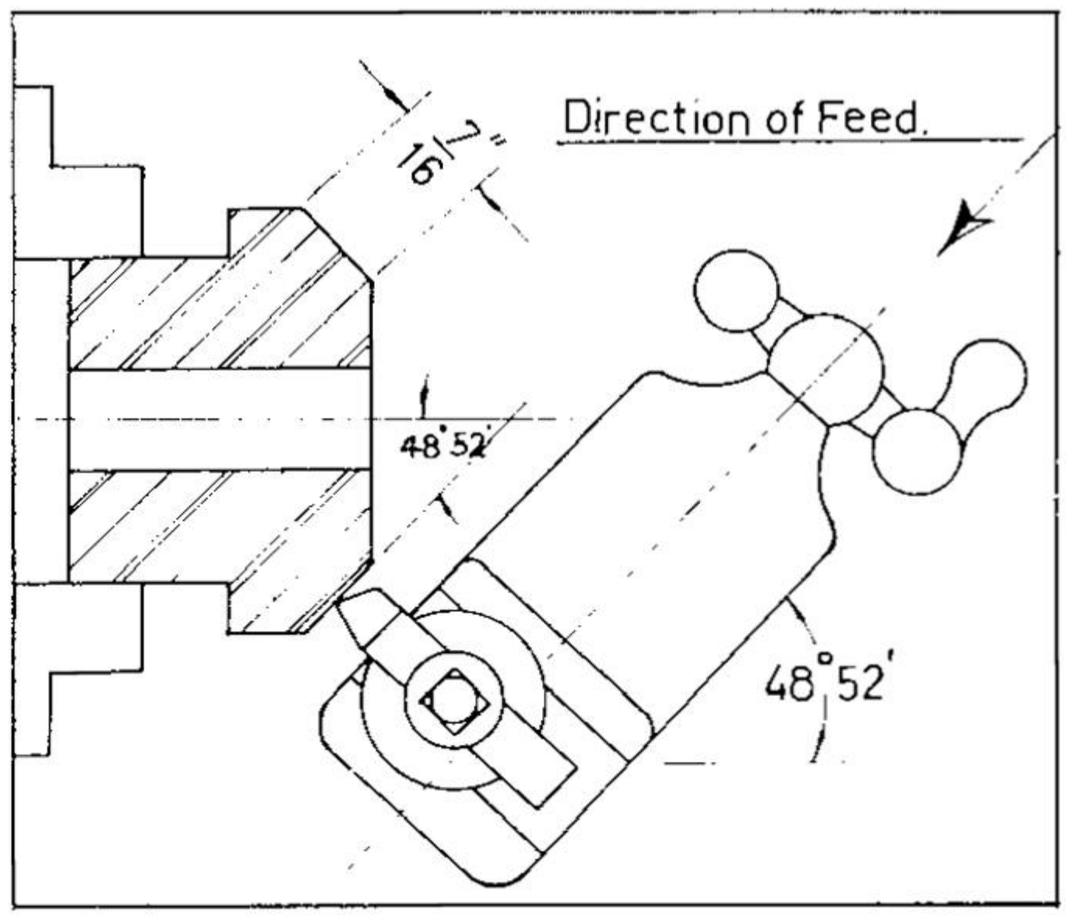


Fig. 200a

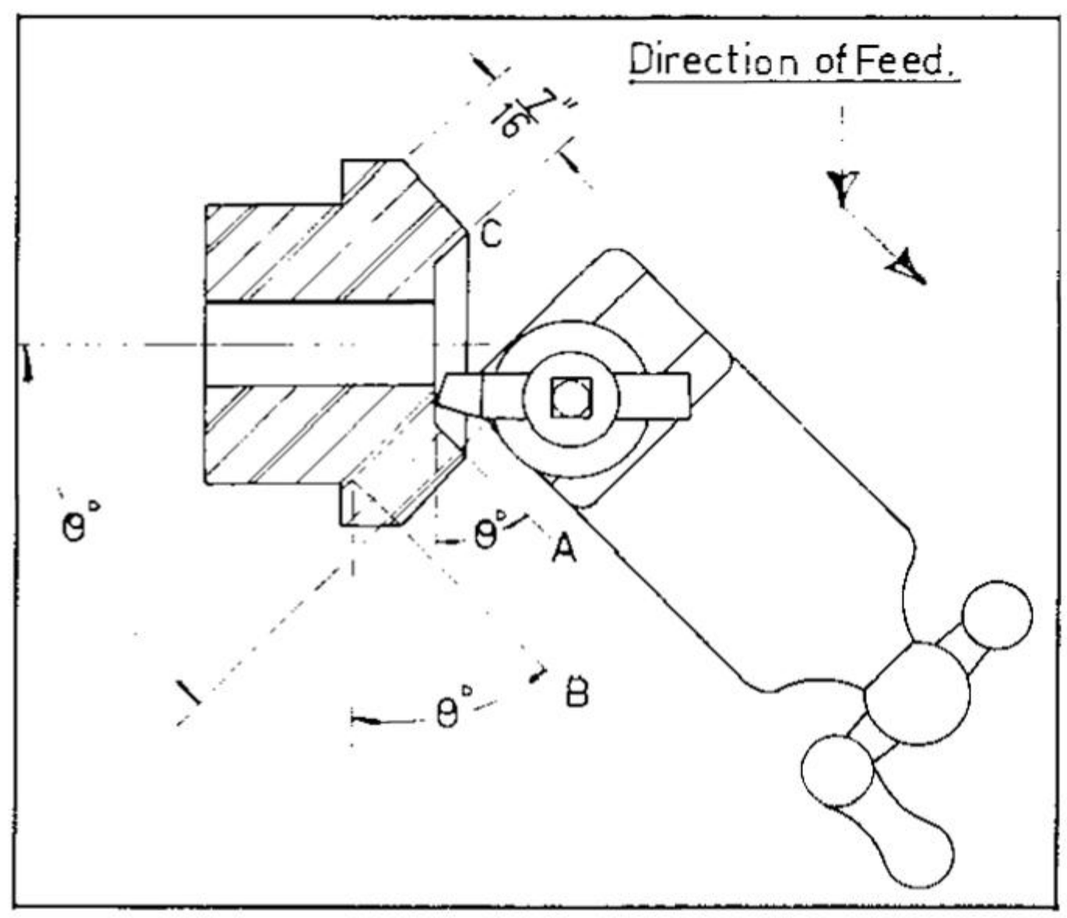


Fig. 200b

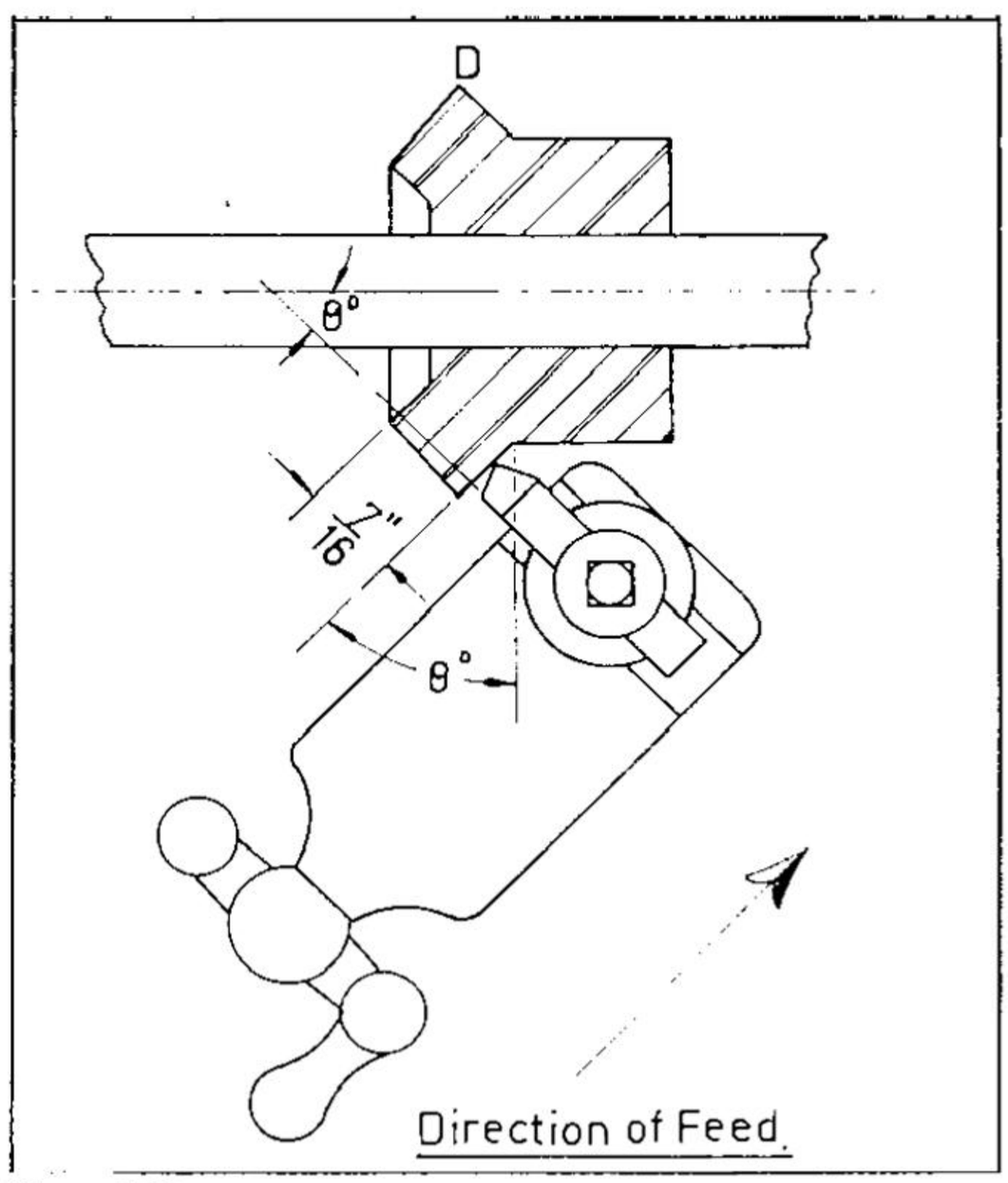


Fig. 200c

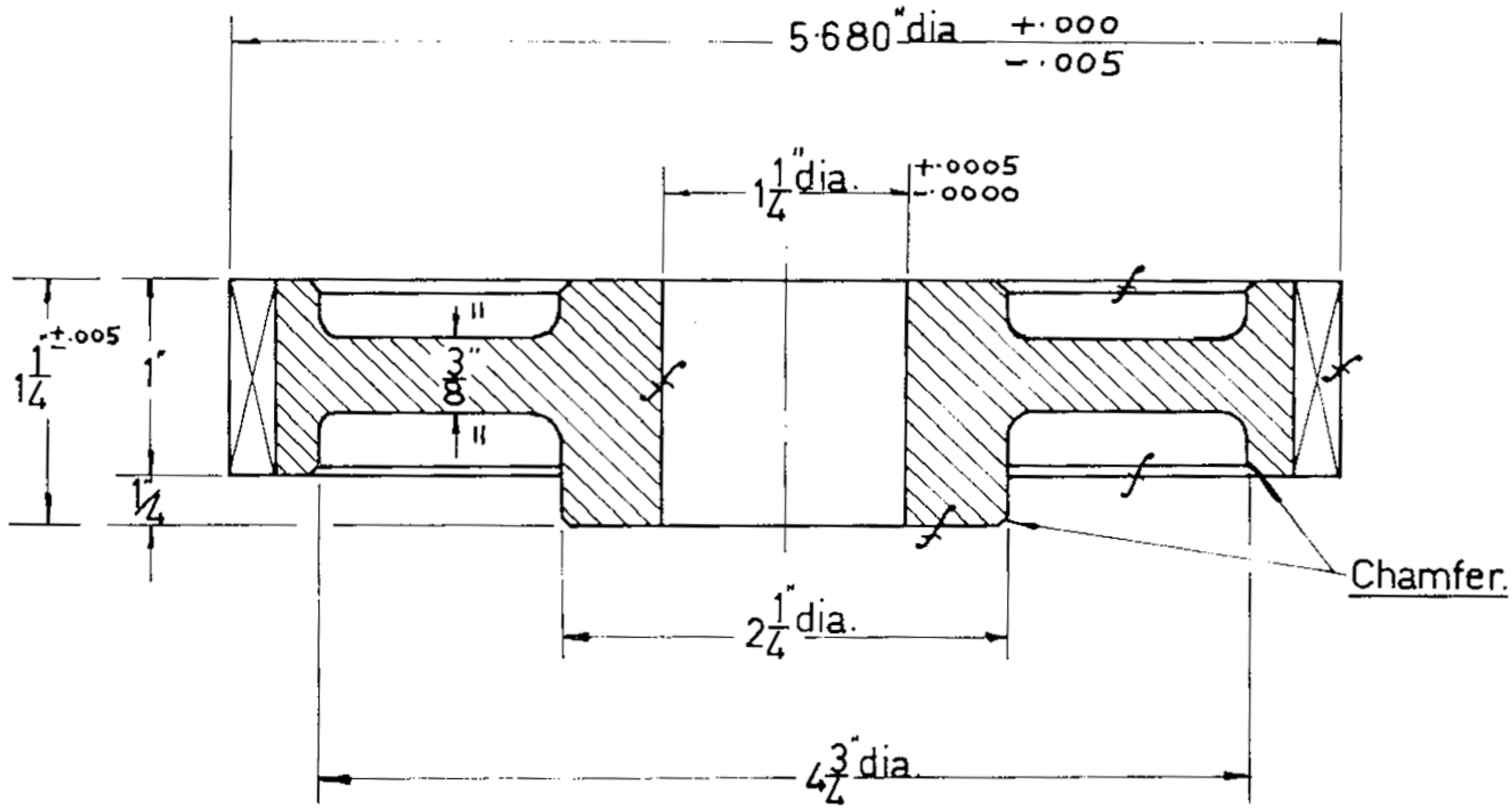


**Fig. 201 Gear Blank**

**Material:** Cast Iron.

Measure the casting to see that it is suitable for the job and to find where the material must be removed. Measuring a casting of this type requires a great deal of care and thought, since positions as well as sizes must be taken into account. First measure the diameters, these are shown in Fig. 201a at "w", "$x^1$ & $x^2$", "$y^1$ & $y^2$" & "z". Diameters on castings are frequently made slightly tapered to facilitate removal of the pattern from the sand in the foundry. Where taper is present take the measurement at the position of "minimum metal", i.e. the small end for an outside diameter and the large end for an inside diameter. For unmachined diameters such as "x" & "y" a small variation from the drawing size is not generally detrimental. If a large variation is found however, the matter should be queried before beginning to machine a casting which may later have to be scrapped.

Having measured the diameters and checked that a sufficient machining allowance is present where needed, next measure the widths of the rim and boss, shown at "a" & "b" in Fig. 201a. These must be sufficient not only for a machining allowance on each side but also to cover any errors of position as shown in Fig. 201b.

If the faces "L" & "M" Fig. 201b are flush with one another and the length "c" between faces "P" & "Q" is to drawing then lengths "a" & "b" need only a machining allowance of approx. 1/32" to 1/16" either side. Should the length "c" be greater than called for then the length "b" must be sufficient to permit the removal of this excess length from face "Q", plus whatever is removed in machining face "P" and still have a machining allowance on face "M". If length "c" is short, then the length "a" must likewise be long enough to allow face "P" to be machined back to give the correct length at "c", allowing for machining at face "Q" and still have a sufficient machining allowance on face "L".

The same considerations apply if face "M" is found to be out of position relative to face "L". Should face "M" for example be short of face "L" by an amount "d" as in Fig. 201b then length "a" must equal the finished width, plus "d" plus

a machining allowance either side. Where face "M" protrudes beyond face "L" the same consideration would apply in reverse.

The web of the gear is shown in the drawing as being central. A slight variation here resulting from correction of positional errors is generally permissible.

Having measured the casting, determined how much metal must be removed, and from where, the job can be set up in a four jaw chuck for machining.

The boss of this casting is long enough and large enough in relation to the overall size to make a good gripping point. The job may therefore be gripped on the boss, holding by approx. 3/8" with the front of the jaws just clear of the corner radius. The diameters w, x, y, and z, Fig. 201a may all be slightly out of true with one another. If this is found to be so, then set the casting in the chuck to give the best compromise of true running between the unmachined diameters "x" and "y" providing that this will still permit cleaning up of the machined diameters "w" and "z". Check the faces of the casting for wobble and tap it true where necessary.

For checking the set up, use a scribing block or a pointer mounted in the lathe tool post. Do not use a dial indicator on a rough cast surface.

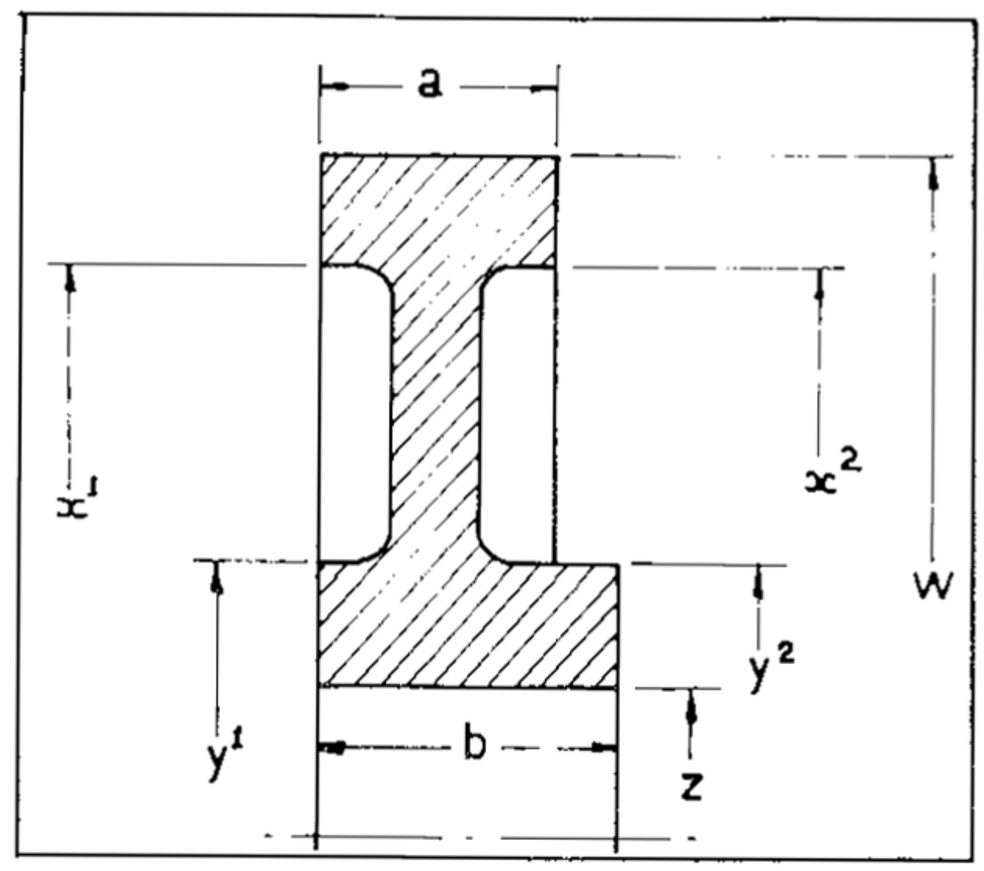


Fig. 201a

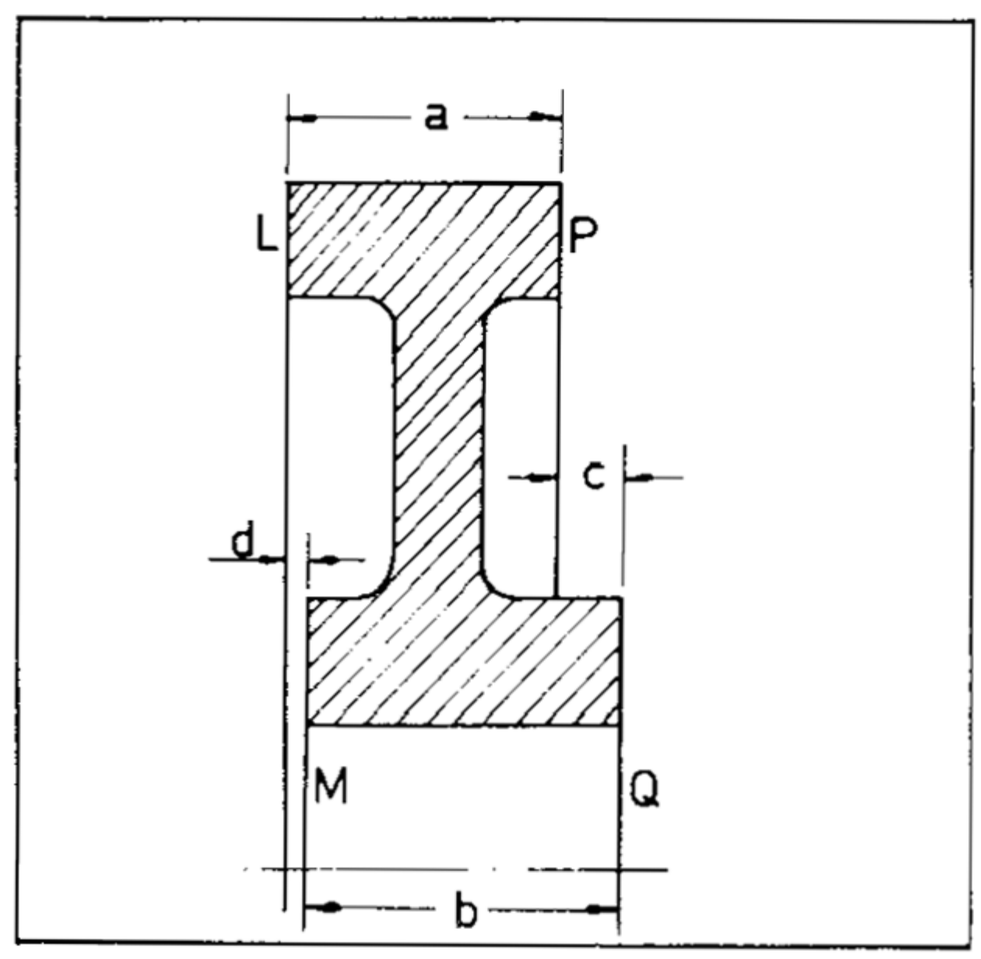


Fig. 201b

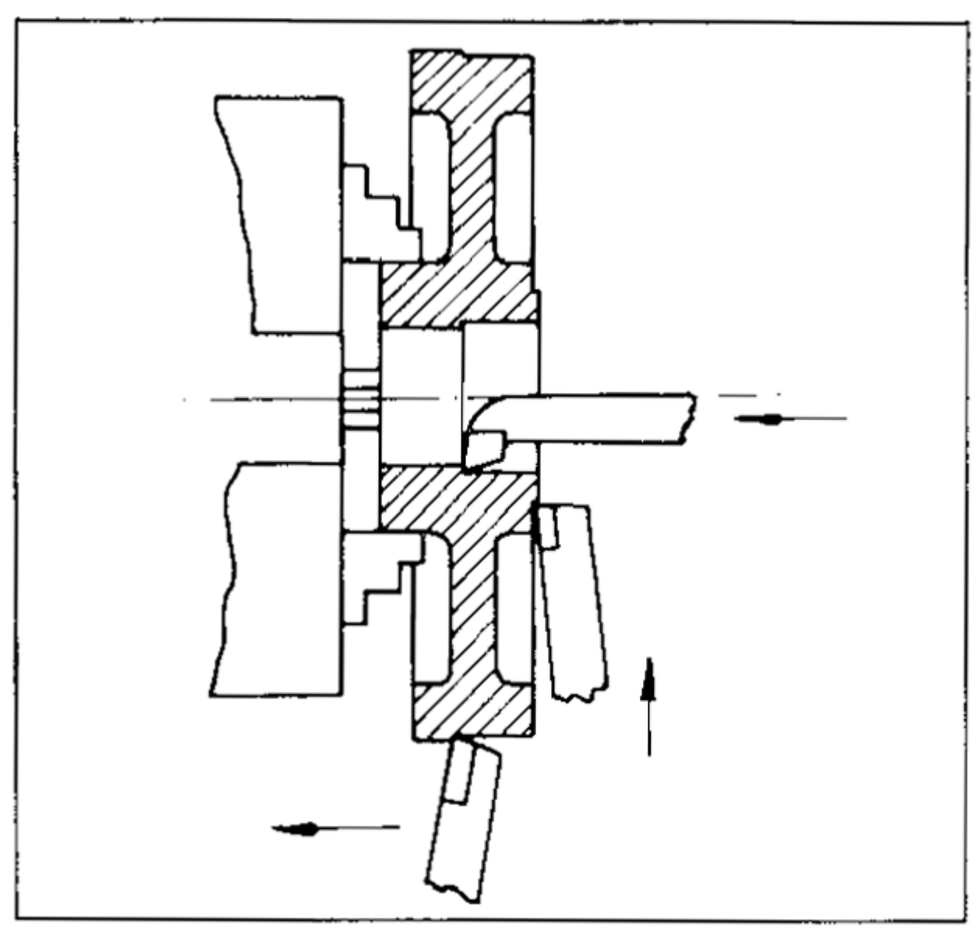

Fig. 201c

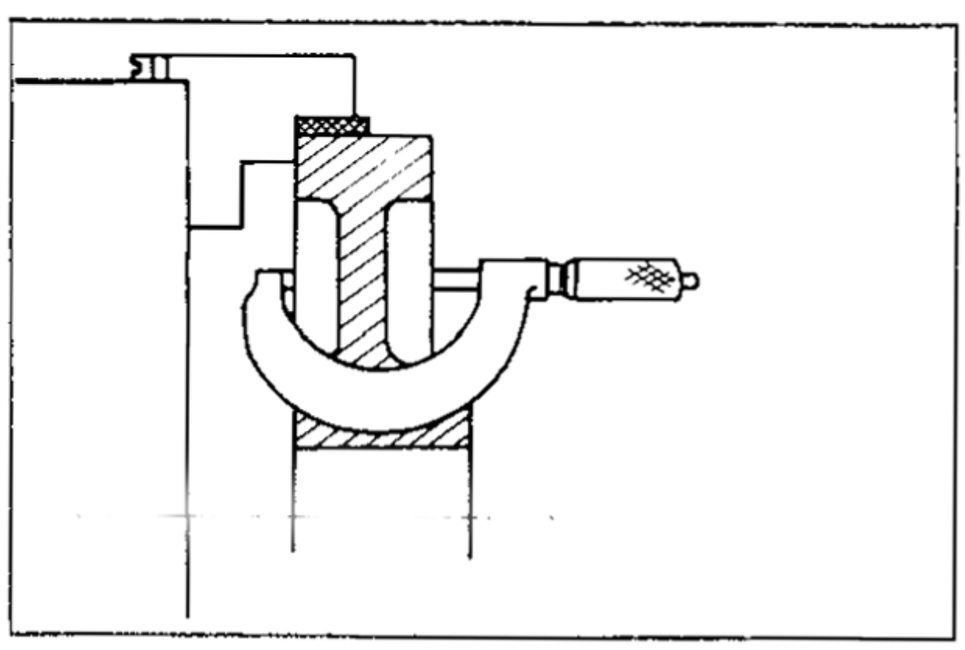

Fig. 201d

With the casting correctly set in the chuck finally tighten down the jaws to give a secure grip.

Using a tungsten carbide tool as shown in Fig. 201c, rough bore the hole to within 1/32" of size, and rough turn the face and the outside. Where possible take the roughing cuts deep enough to get beneath the surface scale. Finish turn the outside, take a light finishing cut over the face and finish bore the hole, or bore to within .004" of size and finish with an adjustable reamer if available, using a slow spindle speed. Chamfer the corner of the boss and inside the rim, break the outside corner of the rim with a file, and break the sharp edge of the bore using a hand scraper and a slow spindle speed.

Remove from the chuck and set up to finish the other side. Grip over the outside with reversed chuck jaws, holding the job back against the jaw faces, and using protection strips of brass or copper under the jaws to prevent damage to the machined surface.

Rough face the side of the rim and check for parallel by measuring adjacent to each jaw with a micrometer as shown in Fig 201d. An error here indicates that the job is not sitting evenly against the jaw faces and it must be tapped back before proceeding.

Rough and finish face the boss to length and finish the rim to width. Chamfer the corner of the boss, and inside the rim, break the outside corner of the rim with a file, and break the sharp edge of the bore using a hand scraper and a slow spindle speed.

# TABLES

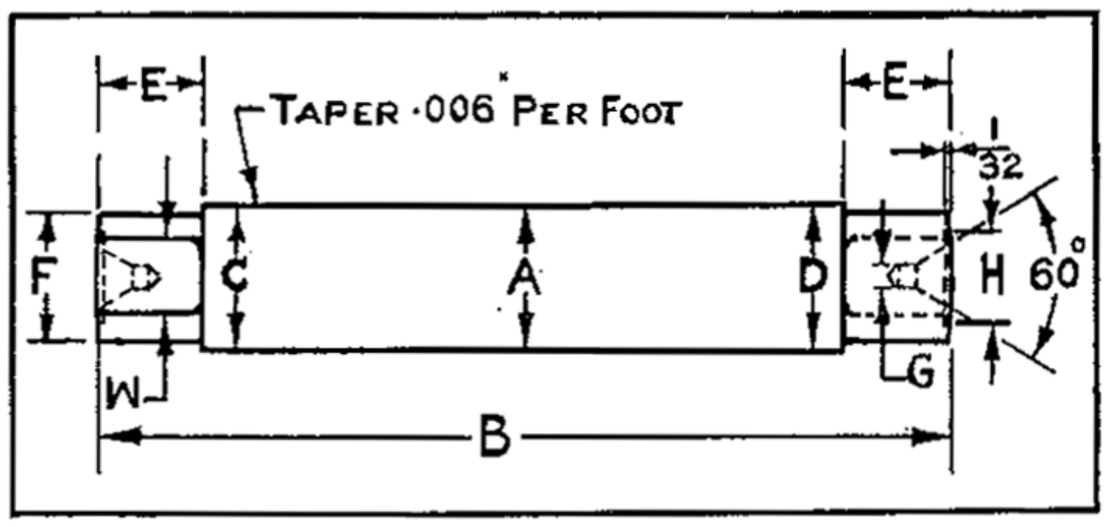


Fig. 193 Lathe Mandrel Dimensions

## Table 14 Sizes for Standard Lathe Mandrels

| Nominal Diameter A | Overall Length B | Small End C | Large End D | End Length E | End Diameter F | Centre Drill G | Recess Diameter H | Width of Flat W |
|---|---|---|---|---|---|---|---|---|
| 3/16 | 3 3/4 | ·1870 | ·1884 | 7/16 | 11/64 | 3/64 | 1/8 | 5/64 |
| 1/4 | 3 3/4 | ·2495 | ·2509 | 7/16 | 15/64 | 3/64 | 1/8 | 7/64 |
| 5/16 | 4 | ·3120 | ·3136 | 7/16 | 9/32 | 3/64 | 3/16 | 1/8 |
| 3/8 | 4 1/4 | ·3745 | ·3760 | 1/2 | 11/32 | 1/16 | 1/4 | 5/32 |
| 7/16 | 4 1/4 | ·4370 | ·4386 | 9/16 | 13/32 | 1/16 | 9/32 | 1/4 |
| 1/2 | 5 | ·4995 | ·5014 | 5/8 | 15/32 | 3/32 | 5/16 | 1/4 |
| 9/16 | 5 1/4 | ·5620 | ·5640 | 5/8 | 17/32 | 3/32 | 5/16 | 1/4 |
| 5/8 | 5 1/2 | ·6245 | ·6265 | 3/4 | 19/32 | 3/32 | 3/8 | 1/4 |
| 11/16 | 5 3/4 | ·6870 | ·6891 | 3/4 | 5/8 | 3/32 | 3/8 | 5/16 |
| 3/4 | 6 | ·7495 | ·7517 | 13/16 | 11/16 | 1/8 | 3/8 | 5/16 |
| 13/16 | 6 1/4 | ·8120 | ·8142 | 7/8 | 3/4 | 1/8 | 3/8 | 7/16 |
| 7/8 | 6 1/2 | ·8740 | ·8764 | 7/8 | 13/16 | 1/8 | 3/8 | 7/16 |
| 15/16 | 6 3/4 | ·9370 | ·9394 | 15/16 | 7/8 | 1/8 | 3/8 | 1/2 |
| 1 | 7 | ·9995 | 1·0020 | 15/16 | 15/16 | 3/16 | 1/2 | 1/2 |
| 1 1/16 | 7 1/4 | 1·0615 | 1·0641 | 1″ | 1 | 3/16 | 1/2 | 1/2 |
| 1 1/8 | 7 1/2 | 1·1240 | 1·1267 | 1″ | 1 1/16 | 3/16 | 1/2 | 1/2 |
| 1 3/16 | 7 3/4 | 1·1865 | 1·1889 | 1″ | 1 1/8 | 3/16 | 1/2 | 1/2 |
| 1 1/4 | 8 | 1·2490 | 1·2520 | 1″ | 1 3/16 | 1/4 | 11/16 | 1/2 |

## Table 15 Decimal Equivalents of Fractions of an Inch

| Fractional inch | Decimal inch | Fractional inch | Decimal inch |
|---|---|---|---|
| $\frac{1}{64}$ | 0·015625 | $\frac{33}{64}$ | 0·515625 |
| $\frac{1}{32}$ | 0·03125 | $\frac{17}{32}$ | 0·53125 |
| $\frac{3}{64}$ | 0·046875 | $\frac{35}{64}$ | 0·546875 |
| $\frac{1}{16}$ | 0·0625 | $\frac{9}{16}$ | 0·5625 |
| $\frac{5}{64}$ | 0·078125 | $\frac{37}{64}$ | 0·578125 |
| $\frac{3}{32}$ | 0·09375 | $\frac{19}{32}$ | 0·59375 |
| $\frac{7}{64}$ | 0·109375 | $\frac{39}{64}$ | 0·609375 |
| $\frac{1}{8}$ | 0·125 | $\frac{5}{8}$ | 0·625 |
| $\frac{9}{64}$ | 0·140625 | $\frac{41}{64}$ | 0·640625 |
| $\frac{5}{32}$ | 0·15625 | $\frac{21}{32}$ | 0·65625 |
| $\frac{11}{64}$ | 0·171875 | $\frac{43}{64}$ | 0·671875 |
| $\frac{3}{16}$ | 0·1875 | $\frac{11}{16}$ | 0·6875 |
| $\frac{13}{64}$ | 0·203125 | $\frac{45}{64}$ | 0·703125 |
| $\frac{7}{32}$ | 0·21875 | $\frac{23}{32}$ | 0·71875 |
| $\frac{15}{64}$ | 0·234375 | $\frac{47}{64}$ | 0·734375 |
| $\frac{1}{4}$ | 0·25 | $\frac{3}{4}$ | 0·75 |
| $\frac{17}{64}$ | 0·265625 | $\frac{49}{64}$ | 0·765625 |
| $\frac{9}{32}$ | 0·28125 | $\frac{25}{32}$ | 0·78125 |
| $\frac{19}{64}$ | 0·296875 | $\frac{51}{64}$ | 0·796875 |
| $\frac{5}{16}$ | 0·3125 | $\frac{13}{16}$ | 0·8125 |
| $\frac{21}{64}$ | 0·328125 | $\frac{53}{64}$ | 0·828125 |
| $\frac{11}{32}$ | 0·34375 | $\frac{27}{32}$ | 0·84375 |
| $\frac{23}{64}$ | 0·359375 | $\frac{55}{64}$ | 0·859375 |
| $\frac{3}{8}$ | 0·375 | $\frac{7}{8}$ | 0·875 |
| $\frac{25}{64}$ | 0·390625 | $\frac{57}{64}$ | 0·890625 |
| $\frac{13}{32}$ | 0·40625 | $\frac{29}{32}$ | 0·90625 |
| $\frac{27}{64}$ | 0·421875 | $\frac{59}{64}$ | 0·921875 |
| $\frac{7}{16}$ | 0·4375 | $\frac{15}{16}$ | 0·9375 |
| $\frac{29}{64}$ | 0·453125 | $\frac{61}{64}$ | 0·953125 |
| $\frac{15}{32}$ | 0·46875 | $\frac{31}{32}$ | 0·96875 |
| $\frac{31}{64}$ | 0·484375 | $\frac{63}{64}$ | 0·984375 |
| $\frac{1}{2}$ | 0·5 | 1 | 1 |

## Table 16 Letter Drill Sizes

| LETTER | Diameter |
|---|---|
| A | ·234 |
| B | ·238 |
| C | ·242 |
| D | ·246 |
| E | ·250 |
| F | ·257 |
| G | ·261 |
| H | ·266 |
| I | ·272 |
| J | ·277 |
| K | ·281 |
| L | ·290 |
| M | ·295 |
| N | ·302 |
| O | ·316 |
| P | ·323 |
| Q | ·332 |
| R | ·339 |
| S | ·348 |
| T | ·358 |
| U | ·368 |
| V | ·377 |
| W | ·386 |
| X | ·397 |
| Y | ·404 |
| Z | ·413 |

## Table 17 Number Drill Sizes

| No. | Diameter | No. | Diameter | No. | Diameter |
|---|---|---|---|---|---|
| 1 | ·228 | 31 | ·120 | 61 | ·0390 |
| 2 | ·221 | 32 | ·116 | 62 | ·0380 |
| 3 | ·213 | 33 | ·113 | 63 | ·0370 |
| 4 | ·209 | 34 | ·111 | 64 | ·0360 |
| 5 | ·2055 | 35 | ·110 | 65 | ·0350 |
| 6 | ·204 | 36 | ·1065 | 66 | ·0330 |
| 7 | ·201 | 37 | ·104 | 67 | ·0320 |
| 8 | ·199 | 38 | ·1015 | 68 | ·0310 |
| 9 | ·196 | 39 | ·0995 | 69 | ·0292 |
| 10 | ·1935 | 40 | ·098 | 70 | ·0280 |
| 11 | ·191 | 41 | ·096 | 71 | ·0260 |
| 12 | ·189 | 42 | ·0935 | 72 | ·0250 |
| 13 | ·185 | 43 | ·089 | 73 | ·0240 |
| 14 | ·182 | 44 | ·086 | 74 | ·0225 |
| 15 | ·180 | 45 | ·082 | 75 | ·0210 |
| 16 | ·177 | 46 | ·081 | 76 | ·0200 |
| 17 | ·173 | 47 | ·0785 | 77 | ·0180 |
| 18 | ·1695 | 48 | ·076 | 78 | ·0160 |
| 19 | ·166 | 49 | ·073 | 79 | ·0145 |
| 20 | ·161 | 50 | ·070 | 80 | ·0135 |
| 21 | ·159 | 51 | ·067 | | |
| 22 | ·157 | 52 | ·0635 | | |
| 23 | ·154 | 53 | ·0595 | | |
| 24 | ·152 | 54 | ·055 | | |
| 25 | ·1495 | 55 | ·052 | | |
| 26 | ·147 | 56 | ·0465 | | |
| 27 | ·144 | 57 | ·043 | | |
| 28 | ·1405 | 58 | ·042 | | |
| 29 | ·136 | 59 | ·041 | | |
| 30 | ·1285 | 60 | ·040 | | |

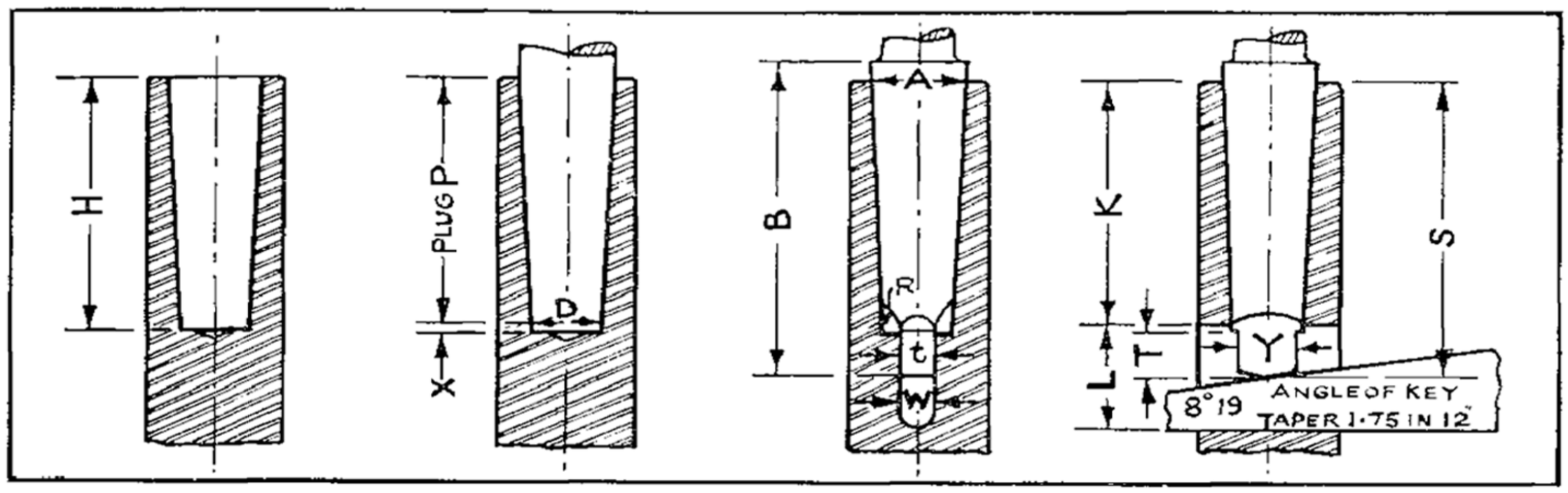


**Fig. 194 Dimensions of Standard Morse Taper Sockets**

## Table 18 Morse Tapers

| No. of Taper | Taper per Foot | D | A | B | S | H | P | t | T | R | y | W | L | K |
|---|---|---|---|---|---|---|---|---|---|---|---|---|---|---|
| 0 | ·62460 | 0·252 | 0·356 | $2\frac{11}{32}$ | $2\frac{7}{32}$ | $2\frac{1}{32}$ | 2 | ·1562 | $\frac{1}{4}$ | $\frac{5}{32}$ | ·235 | 0·160 | $\frac{9}{16}$ | $1\frac{15}{16}$ |
| 1 | ·59858 | 0·369 | 0·475 | $2\frac{9}{16}$ | $2\frac{7}{16}$ | $2\frac{3}{16}$ | $2\frac{1}{8}$ | ·2031 | $\frac{3}{8}$ | $\frac{3}{16}$ | ·343 | 0·213 | $\frac{3}{4}$ | $2\frac{1}{16}$ |
| 2 | ·59941 | 0·572 | 0·700 | $3\frac{1}{8}$ | $2\frac{15}{16}$ | $2\frac{5}{8}$ | $2\frac{9}{16}$ | ·2500 | $\frac{7}{16}$ | $\frac{1}{4}$ | $\frac{17}{32}$ | 0·260 | $\frac{7}{8}$ | $2\frac{1}{2}$ |
| 3 | ·60235 | 0·778 | 0·938 | $3\frac{7}{8}$ | $3\frac{11}{16}$ | $3\frac{1}{4}$ | $3\frac{3}{16}$ | ·3125 | $\frac{9}{16}$ | $\frac{9}{32}$ | $\frac{23}{32}$ | 0·322 | $1\frac{3}{16}$ | $3\frac{1}{16}$ |
| 4 | ·62326 | 1·020 | 1·231 | $4\frac{7}{8}$ | $4\frac{5}{8}$ | $4\frac{1}{8}$ | $4\frac{1}{16}$ | ·4687 | $\frac{5}{8}$ | $\frac{5}{16}$ | $\frac{31}{32}$ | 0·478 | $1\frac{1}{4}$ | $3\frac{7}{8}$ |
| 5 | ·63151 | 1·475 | 1·748 | $6\frac{1}{8}$ | $5\frac{7}{8}$ | $5\frac{1}{4}$ | $5\frac{3}{16}$ | ·6250 | $\frac{3}{4}$ | $\frac{3}{8}$ | $1\frac{13}{32}$ | 0·635 | $1\frac{1}{2}$ | $4\frac{15}{16}$ |
| 6 | ·62565 | 2·116 | 2·494 | $8\frac{9}{16}$ | $8\frac{1}{4}$ | $7\frac{3}{8}$ | $7\frac{1}{4}$ | ·7500 | $\frac{7}{8}$ | $\frac{1}{2}$ | 2 | 0·760 | $1\frac{3}{4}$ | 7 |
| 7 | ·62400 | 2·750 | 3·270 | $11\frac{5}{8}$ | $11\frac{1}{4}$ | $10\frac{1}{8}$ | 10 | 1·1250 | $1\frac{1}{8}$ | $\frac{3}{4}$ | $2\frac{5}{8}$ | 1·135 | $2\frac{5}{8}$ | $9\frac{1}{2}$ |

## Table 19 Brown and Sharpe Tapers

| No. of taper | 1 | 2 | 3 | 4 | 5 | 6 | 7 | 8 | 9 | 10 | 11 | 12 |
|---|---|---|---|---|---|---|---|---|---|---|---|---|
| Taper per Foot | ·50200 | ·50200 | ·50200 | ·50240 | ·50160 | ·50329 | ·50147 | ·50100 | ·50085 | ·51612 | ·50100 | ·49973 |
| Small end Diam. | ·20000 | ·25000 | ·31250 | ·35000 | ·45000 | ·50000 | ·60000 | ·75000 | ·90010 | 1·04465 | 1·24995 | 1·50010 |
| Length | $\frac{15}{16}$ | $1\frac{3}{16}$ | $1\frac{1}{2}$ | $1\frac{11}{16}$ | $2\frac{1}{8}$ | $2\frac{3}{8}$ | $2\frac{7}{8}$ | $3\frac{9}{16}$ | $4\frac{1}{4}$ | 5 | $5\frac{15}{16}$ | $7\frac{1}{8}$ |

## Table 20 Jarno Tapers

| | | |
|---|---|---|
| Number of Taper | = | N |
| Large End Dia. | = | N/8 |
| Small End Dia. | = | N/10 |
| Length | = | N/2 |

## Table 21 Imperial Standard Wire Gauge

| No. of Wire Gauge | Inches | No. of Wire Gauge | Inches |
|---|---|---|---|
| 000000 | ·464 | 18 | ·048 |
| 00000 | ·432 | 19 | ·040 |
| 0000 | ·400 | 20 | ·036 |
| 000 | ·372 | 21 | ·032 |
| 00 | ·348 | 22 | ·028 |
| 0 | ·324 | 23 | ·024 |
| 1 | ·300 | 24 | ·022 |
| 2 | ·276 | 25 | ·020 |
| 3 | ·252 | 26 | ·018 |
| 4 | ·232 | 27 | ·0164 |
| 5 | ·212 | 28 | ·0149 |
| 6 | ·192 | 29 | ·0136 |
| 7 | ·176 | 30 | ·0124 |
| 8 | ·160 | 31 | ·0116 |
| 9 | ·144 | 32 | ·0108 |
| 10 | ·128 | 33 | ·0100 |
| 11 | ·116 | 34 | ·0092 |
| 12 | ·104 | 35 | ·0084 |
| 13 | ·092 | 36 | ·0076 |
| 14 | ·080 | 37 | ·0068 |
| 15 | ·072 | 38 | ·0060 |
| 16 | ·064 | 39 | ·0052 |
| 17 | ·056 | 40 | ·0048 |

## Table 22 British Standard Whitworth Thread Series (B.S.W.)

| Diameter | T.P.I. | Tapping | Clearance |
|---|---|---|---|
| $\frac{1}{16}$ | 60 | No. 56 | No. 52 |
| $\frac{3}{32}$ | 48 | No. 49 | No. 41 |
| $\frac{1}{8}$ | 40 | No. 38 | No. 30 |
| $\frac{5}{32}$ | 32 | No. 30 | No. 21 |
| $\frac{3}{16}$ | 24 | No. 25 | No. 11 |
| $\frac{7}{32}$ | 24 | No. 15 | No. 2 |
| $\frac{1}{4}$ | 20 | No. 6 | "F" |
| $\frac{5}{16}$ | 18 | "G" | "P" |
| $\frac{3}{8}$ | 16 | "O" | "W" |
| $\frac{7}{16}$ | 14 | $\frac{3}{8}$ | $\frac{29}{64}$ |
| $\frac{1}{2}$ | 12 | $\frac{27}{64}$ | $\frac{33}{64}$ |
| $\frac{9}{16}$ | 12 | $\frac{31}{64}$ | $\frac{37}{64}$ |
| $\frac{5}{8}$ | 11 | $\frac{35}{64}$ | $\frac{41}{64}$ |
| $\frac{3}{4}$ | 10 | $\frac{21}{32}$ | $\frac{49}{64}$ |
| $\frac{7}{8}$ | 9 | $\frac{49}{64}$ | $\frac{57}{64}$ |
| 1″ | 8 | $\frac{7}{8}$ | $1\frac{1}{64}$ |

## Table 23 British Standard Fine Thread Series (B.S.F.)

| Diameter | T.P.I. | Tapping | Clearance |
|---|---|---|---|
| $\frac{3}{16}$ | 32 | No. 22 | No. 11 |
| $\frac{7}{32}$ | 28 | No. 13 | No. 2 |
| $\frac{1}{4}$ | 26 | No. 3 | "F" |
| $\frac{9}{32}$ | 26 | "C" | "L" |
| $\frac{5}{16}$ | 22 | "I" | "P" |
| $\frac{3}{8}$ | 20 | $\frac{21}{64}$ | "W" |
| $\frac{7}{16}$ | 18 | "W" | $\frac{29}{64}$ |
| $\frac{1}{2}$ | 16 | $\frac{7}{16}$ | $\frac{33}{64}$ |
| $\frac{9}{16}$ | 16 | $\frac{1}{2}$ | $\frac{37}{64}$ |
| $\frac{5}{8}$ | 14 | $\frac{9}{16}$ | $\frac{41}{64}$ |
| $\frac{11}{16}$ | 14 | $\frac{5}{8}$ | $\frac{45}{64}$ |
| $\frac{3}{4}$ | 12 | $\frac{43}{64}$ | $\frac{49}{64}$ |
| $\frac{13}{16}$ | 12 | $\frac{47}{64}$ | $\frac{53}{64}$ |
| $\frac{7}{8}$ | 11 | $\frac{51}{64}$ | $\frac{57}{64}$ |
| 1″ | 10 | $\frac{29}{32}$ | $1\frac{1}{64}$ |

## Table 24 Unified National Coarse Thread Series (U.N.C.)

| Size | T.P.I. | Tapping | Clearance |
|---|---|---|---|
| 1 (·073) | 64 | No. 54 | No. 48 |
| 2 (·086) | 56 | No. 51 | No. 43 |
| 3 (·099) | 48 | No. 48 | No. 37 |
| 4 (·112) | 40 | No. 45 | No. 32 |
| 5 (·125) | 40 | No. 40 | No. 30 |
| 6 (·138) | 32 | No. 37 | No. 27 |
| 8 (·164) | 32 | No. 30 | No. 18 |
| 10 (·190) | 24 | No. 27 | No. 9 |
| 12 (·216) | 24 | No. 18 | No. 2 |
| $\frac{1}{4}$ | 20 | No. 6 | "F" |
| $\frac{5}{16}$ | 18 | "G" | "P" |
| $\frac{3}{8}$ | 16 | "O" | "W" |
| $\frac{7}{16}$ | 14 | $\frac{3}{8}$ | $\frac{29}{64}$ |
| $\frac{1}{2}$ | 13 | $\frac{27}{64}$ | $\frac{33}{64}$ |
| $\frac{9}{16}$ | 12 | $\frac{31}{64}$ | $\frac{37}{64}$ |
| $\frac{5}{8}$ | 11 | $\frac{35}{64}$ | $\frac{41}{64}$ |
| $\frac{3}{4}$ | 10 | $\frac{21}{32}$ | $\frac{49}{64}$ |
| $\frac{7}{8}$ | 9 | $\frac{49}{64}$ | $\frac{57}{64}$ |
| 1 | 8 | $\frac{7}{8}$ | $1\frac{1}{64}$ |

## Table 25 Unified National Fine Thread Series (U.N.F.)

| Size | T.P.I. | Tapping | Clearance |
|---|---|---|---|
| 0 (·060) | 80 | No. 56 | $\frac{1}{16}$ |
| 1 (·073) | 72 | No. 53 | No. 48 |
| 2 (·086) | 64 | No. 50 | No. 43 |
| 3 (·099) | 56 | No. 48 | No. 37 |
| 4 (·112) | 48 | No. 43 | No. 32 |
| 5 (·125) | 44 | No. 38 | No. 30 |
| 6 (·138) | 40 | No. 34 | No. 27 |
| 8 (·164) | 36 | No. 29 | No. 18 |
| 10 (·190) | 32 | $\frac{5}{32}$ | No. 9 |
| 12 (·216) | 28 | $\frac{11}{64}$ | No. 2 |
| $\frac{1}{4}$ | 28 | $\frac{7}{32}$ | "F" |
| $\frac{5}{16}$ | 24 | $\frac{17}{64}$ | "P" |
| $\frac{3}{8}$ | 24 | $\frac{21}{64}$ | "W" |
| $\frac{7}{16}$ | 20 | $\frac{25}{64}$ | $\frac{29}{64}$ |
| $\frac{1}{2}$ | 20 | $\frac{29}{64}$ | $\frac{33}{64}$ |
| $\frac{9}{16}$ | 18 | $\frac{1}{2}$ | $\frac{37}{64}$ |
| $\frac{5}{8}$ | 18 | $\frac{9}{16}$ | $\frac{41}{64}$ |
| $\frac{3}{4}$ | 16 | $\frac{11}{16}$ | $\frac{49}{64}$ |
| $\frac{7}{8}$ | 14 | $\frac{51}{64}$ | $\frac{57}{64}$ |
| 1 | 12* | $\frac{29}{32}$ | $1\frac{1}{64}$ |

* 1″ National Special formerly National Fine or S.A.E. = 14 T.P.I.

## Table 26 British Standard Pipe Thread (B.S.P.) Whitworth Form 55°

| Nominal Bore | Nominal O.D. of pipe | Major Dia. of Thread | T.P.I. |
|---|---|---|---|
| 1/8 | ·400 | ·383 | 28 |
| 1/4 | ·538 | ·518 | 19 |
| 3/8 | ·676 | ·656 | 19 |
| 1/2 | ·847 | ·825 | 14 |
| 5/8 | ·923 | ·902 | 14 |
| 3/4 | 1·063 | 1·041 | 14 |
| 1 | 1·336 | 1·309 | 11 |
| 1 1/4 | 1·667 | 1·650 | 11 |
| 1 1/2 | 1·909 | 1·882 | 11 |
| 2 | 2·381 | 2·347 | 11 |
| 2 1/2 | 2·996 | 2·960 | 11 |
| 3 | 3·500 | 3·460 | 11 |

## Table 27 American Standard Pipe Threads (National Pipe) 60°

| Nominal Bore | Nominal O.D. of Pipe | Major Dia. of Thread | T.P.I. |
|---|---|---|---|
| 1/8 | ·405 | ·399 | 27 |
| 1/4 | ·540 | ·527 | 18 |
| 3/8 | ·675 | ·664 | 18 |
| 1/2 | ·840 | ·826 | 14 |
| 3/4 | 1·050 | 1·036 | 14 |
| 1 | 1·315 | 1·296 | 11 1/2 |
| 1 1/4 | 1·660 | 1·641 | 11 1/2 |
| 1 1/2 | 1·900 | 1·880 | 11 1/2 |
| 2 | 2·375 | 2·350 | 11 1/2 |
| 2 1/2 | 2·875 | 2·846 | 8 |
| 3 | 3·500 | 3·472 | 8 |

## Table 28 British Standard Copper Pipe Thread Whitworth Form 55°

| Nominal Bore | Nominal O.D. of Pipe | Major Dia. of Thread | T.P.I. |
|---|---|---|---|
| 1/8 | ·260 | ·248 | 28 |
| 1/4 | ·400 | ·389 | 20 |
| 3/8 | ·525 | ·514 | 20 |
| 1/2 | ·650 | ·639 | 20 |
| 5/8 | ·777 | ·764 | 20 |
| 3/4 | ·902 | ·889 | 20 |
| 7/8 | 1·027 | 1·014 | 20 |
| 1 | 1·168 | 1·155 | 20 |
| 1 1/4 | 1·418 | 1·405 | 20 |
| 1 1/2 | 1·668 | 1·655 | 20 |
| 1 3/4 | 1·942 | 1·929 | 16 |
| 2 | 2·194 | 2·179 | 16 |

## Table 29 Model Engineer's Thread (M.E.) Whitworth Form 55°

| Diameter | Threads per Inch | Tapping Drill |
|---|---|---|
| 1/8 | 40 | No. 40 |
| 5/32 | 40 | No. 30 |
| 3/16 | 40 | 5/32 |
| 7/32 | 40 | 3/16 |
| 1/4 | 40 | 7/32 |
| 9/32 | 32 | "C" |
| 5/16 | 32 | "J" |
| 3/8 | 32 | "R" |
| 7/16 | 26 | 10 mm. |
| 1/2 | 26 | 29/64 |

## Table 30 British Standard Conduit Threads Whitworth Form 55°

| Diameter | T.P.I. |
|---|---|
| 1/2 | 18 |
| 5/8 | 18 |
| 3/4 | 16 |
| 1 | 16 |
| 1 1/4 | 16 |
| 1 1/2 | 14 |
| 2 | 14 |
| 2 1/2 | 14 |

## Table 31 Brass Thread Whitworth Form 55°

| Diameter | T.P.I. | Diameter | T.P.I. |
|---|---|---|---|
| 1/4 | 26 | 13/16 | 26 |
| 5/16 | 26 | 7/8 | 26 |
| 3/8 | 26 | 15/16 | 26 |
| 7/16 | 26 | 1 | 26 |
| 1/2 | 26 | 1 1/8 | 26 |
| 9/16 | 26 | 1 1/4 | 26 |
| 5/8 | 26 | 1 3/8 | 26 |
| 3/4 | 26 | 1 1/2 | 26 |

## Table 32 Cycle Threads (B.S.C.)

60°, full depth = ·533 x p, r = ·166 x p

| Bolts and Fittings | | | Spokes and Nipples | | |
|---|---|---|---|---|---|
| Dia. | T.P.I. | Depth of Thread | Gauge S.W.G. | T.P.I. | Depth of Thread |
| $\frac{1}{8}$ | 40 | ·0133 | 15 (·072) | 56 | ·0095 |
| $\frac{5}{32}$ | 32 | ·0166 | 14 (·080) | 56 | ·0095 |
| $\frac{3}{16}$ | 32 | ·0166 | 13 (·092) | 56 | ·0095 |
| $\frac{7}{32}$ | 26 | ·0205 | 12 (·104) | 56 | ·0095 |
| $\frac{1}{4}$ | 26 | ·0205 | 11 (·116) | 44 | ·0121 |
| $\frac{9}{32}$ | 26 | ·0205 | 10 (·128) | 40 | ·0133 |
| $\frac{5}{16}$ | 26 | ·0205 | 9 (·144) | 40 | ·0133 |
| $\frac{3}{8}$ | 26 | ·0205 | 8 (·160) | 32 | ·0166 |
| $\frac{7}{16}$ | 26 | ·0205 | | | |
| $\frac{1}{2}$ | 26 | ·0205 | | | |
| $\frac{9}{16}$ | 26 | ·0205 | | | |
| $\frac{9}{16}$ | 20* | ·0265 | | | |
| $\frac{5}{8}$ | 26 | ·0205 | | | |
| $\frac{11}{16}$ | 26 | ·0205 | | | |
| $\frac{3}{4}$ | 26 | ·0205 | | | |
| $\frac{31}{32}$ | 30* | ·0175 | | | |
| 1 | 24* | ·0220 | | | |
| 1·37 | 24* | ·0220 | | | |

*These sizes are in regular use although not forming part of the standard.

## Table 33 S.A.E. Spark Plug Threads Unified Form 60°

| Diameter | Pitch |
|---|---|
| $\frac{1}{4}''$ | 32 T.P.I. |
| $\frac{3}{8}''$ | 24 T.P.I. |
| 10 mm. | 1 mm. |
| 14 mm. | 1·25 mm. |
| 18 mm. | 1·5 mm. |
| $\frac{7}{8}''$ | 18 T.P.I. |

## Table 34 British Association or Swiss Thury Thread Series (B.A.)

(even numbers = preferred sizes)

| No. & size in mm. | | Pitch in mm. | Tapping | Clearance |
|---|---|---|---|---|
| 0 | 6·0 | 1·00 | No. 8 | "B" |
| 1 | 5·3 | ·90 | No. 16 | No. 3 |
| 2 | 4·7 | ·81 | No. 22 | No. 12 |
| 3 | 4·1 | ·73 | No. 29 | No. 19 |
| 4 | 3·6 | ·66 | No. 32 | No. 27 |
| 5 | 3·2 | ·59 | No. 36 | No. 30 |
| 6 | 2·8 | ·53 | No. 42 | No. 33 |
| 7 | 2·5 | ·48 | No. 45 | No. 38 |
| 8 | 2·2 | ·43 | No. 50 | No. 43 |
| 9 | 1·9 | ·39 | No. 53 | No. 47 |
| 10 | 1·7 | ·35 | No. 54 | No. 50 |
| 11 | 1·5 | ·31 | No. 56 | No. 53 |
| 12 | 1·3 | ·28 | No. 58 | No. 54 |
| 13 | 1·2 | ·25 | No. 63 | No. 55 |
| 14 | 1·0 | ·23 | No. 69 | No. 58 |
| 15 | 0·90 | ·21 | No. 70 | No. 62 |
| 16 | 0·79 | ·19 | No. 72 | No. 66 |
| 17 | 0·70 | ·17 | No. 74 | No. 69 |
| 18 | 0·62 | ·15 | No. 77 | No. 71 |

## Table 35 Swiss Progress Thread Series

50°— full depth = ·8 x p, r = ·073 x p.

| No. & Size in mm. | | Pitch in mm. |
|---|---|---|
| 20 | 2·0 | ·4 |
| 19 | 1·9 | ·38 |
| 18 | 1·8 | ·36 |
| 17 | 1·7 | ·34 |
| 16 | 1·6 | ·32 |
| 15 | 1·5 | ·375 |
| 14 | 1·4 | ·350 |
| 13 | 1·3 | ·325 |
| 12 | 1·2 | ·300 |
| 11 | 1·1 | ·275 |
| 10 | 1·0 | ·250 |
| 9½ | 0·95 | ·225 |
| 9 | 0·90 | ·225 |
| 8½ | 0·85 | ·200 |
| 8 | 0·80 | ·200 |
| 7½ | 0·75 | ·175 |
| 7 | 0·70 | ·175 |
| 6½ | 0·65 | ·150 |
| 6 | 0·60 | ·150 |

## Table 36 Society Thread

Recommended by the Royal Microscopical Society for use on microscope objectives and nose pieces. 55° Whitworth Form. 36 T.P.I.

| Male Thread | | Female Thread | |
|---|---|---|---|
| major dia. | ·7982″ — ·7952″ | major dia. | ·8030″ — ·8000″ |
| minor dia. | ·7626″ — ·7596″ | minor dia. | ·7674″ — ·7644″ |

## Table 37 Principal Metric Screw Thread Systems

| | COARSE RANGE | | | | | FINE RANGE | | | |
|---|---|---|---|---|---|---|---|---|---|
| | 60° | 60° | 60° | 60° | 53° 8′ | 60° | 60° | 60° | 60° |
| Dia. | ISO | D.I.N. | French | S.F. | Lowenherz | SI | D.I.N. | Swiss | SKF |
| 1·0 | ·25 | ·25 | ·25 | — | ·25 | ·20 | ·20 | ·12 | — |
| 1·2 | ·25 | ·25 | ·25 | — | ·25 | ·20 | ·20 | ·12 | — |
| 1·4 | ·30 | ·30 | ·30 | — | ·30 | ·20 | ·20 | ·12 | — |
| 1·6 | — | — | ·30 | — | — | — | — | — | — |
| 1·7 | ·35 | ·35 | — | — | ·35 | ·20 | ·20 | ·20 | — |
| 1·8 | — | — | ·40 | — | — | — | — | — | — |
| 2·0 | ·40 | ·40 | ·40 | — | ·40 | ·25 | ·20 | ·25 | — |
| 2·2 | — | — | ·45 | — | — | — | — | — | — |
| 2·3 | ·40 | ·40 | — | — | ·40 | ·25 | ·20 | ·25 | — |
| 2·5 | — | — | ·45 | — | — | — | — | — | — |
| 2·6 | ·45 | ·45 | — | — | ·45 | ·35 | ·25 | ·25 | — |
| 3·0 | ·60 | ·50 | ·60 | ·50 | ·50 | ·35 | ·35 | ·35 | — |
| 3·5 | ·60 | ·60 | — | — | ·60 | ·35 | ·35 | ·35 | — |
| 4·0 | ·75 | ·70 | ·75 | ·75 | ·70 | ·50 | ·35 | ·50 | — |
| 4·5 | ·75 | ·75 | — | — | ·75 | ·50 | ·50 | ·50 | — |
| 5·0 | ·90 | ·80 | ·90 | ·75 | ·80 | ·50 | ·50 | ·50 | — |
| 5·5 | — | ·90 | — | — | ·90 | — | ·50 | ·50 | — |
| 6·0 | 1·0 | 1·0 | 1·0 | 1·0 | 1·0 | ·75 | ·75 | ·75 | — |
| 7·0 | 1·0 | 1·0 | 1·0 | 1·0 | 1·1 | ·75 | ·75 | ·75 | — |
| 8·0 | 1·25 | 1·25 | 1·25 | 1·0 | 1·2 | 1·0 | ·75 | 1·0 | — |
| 9·0 | 1·25 | 1·25 | 1·25 | 1·0 | 1·3 | 1·0 | 1·0 | 1·0 | — |
| 10·0 | 1·5 | 1·5 | 1·5 | 1·5 | 1·4 | 1·0 | 1·0 | 1·0 | ·75 |
| 11·0 | — | 1·5 | — | — | — | — | 1·0 | 1·0 | — |
| 12·0 | 1·75 | 1·75 | 1·75 | 1·5 | 1·6 | 1·50 | 1·50 | 1·25 | 1·00 |
| 14·0 | 2·0 | 2·0 | 2·0 | 2·0 | 1·8 | 1·50 | 1·50 | 1·25 | — |
| 15·0 | — | — | — | — | — | — | — | — | 1·00 |
| 16·0 | 2·0 | 2·0 | 2·0 | 2·0 | 2·0 | 1·50 | 1·50 | 1·25 | — |
| 17·0 | — | — | — | — | — | — | — | — | 1·00 |
| 18·0 | 2·5 | 2·5 | 2·5 | 2·5 | 2·2 | 1·50 | 1·50 | 1·50 | — |
| 20·0 | 2·5 | 2·5 | 2·5 | 2·5 | 2·4 | 1·50 | 1·50 | 1·50 | 1·00 |
| 22·0 | 2·5 | 2·5 | 2·5 | 2·5 | 2·8 | 1·50 | 1·50 | 1·50 | — |
| 24·0 | 3·0 | 3·0 | 3·0 | 3·0 | 2·8 | 2·0 | 1·50 | 1·50 | — |
| 25·0 | — | — | — | — | — | — | — | — | 1·50 |
| 26·0 | — | — | — | 3·0 | 3·2 | — | — | — | — |
| 27·0 | 3·0 | 3·0 | 3·0 | — | — | 2·0 | 1·5 | 2·0 | — |
| 28·0 | — | — | — | 3·0 | 3·2 | — | — | — | — |
| 30·0 | 3·5 | 3·5 | 3·5 | 3·5 | 3·6 | 2·0 | 1·5 | 2·0 | 1·5 |
| 32·0 | — | — | — | 3·5 | 3·6 | — | — | — | — |
| 33·0 | 3·5 | 3·5 | 3·5 | — | — | 2·0 | 1·5 | 2·0 | — |
| 34·0 | — | — | — | 3·5 | — | — | — | — | — |
| 35·0 | — | — | — | — | — | — | — | — | 1·5 |
| 36·0 | 4·0 | 4·0 | 4·0 | 4·0 | 4·0 | 3·0 | 1·5 | 2·0 | — |
| 38·0 | — | — | — | 4·0 | — | — | — | — | — |
| 39·0 | 4·0 | 4·0 | 4·0 | — | — | 3·0 | — | 2·0 | — |
| 40·0 | — | — | — | 4·0 | 4·4 | — | 1·5 | — | 1·5 |

# INDEX


Acme Thread .... .... .... .... .... .... .... 51
Aligning Tailstock .... .... .... .... .... .... .... 45
Allowance for Finish .... .... .... .... .... .... 21, 22
Aluminium, Machining .... .... .... .... .... .... 22
Angle Plate .... .... .... .... .... .... .... .... 38
Angles, Tool .... .... .... .... .... .... .... 13–21
Annealing .... .... .... .... .... .... .... .... 84
Apron .... .... .... .... .... .... .... .... 10

Back Gears .... .... .... .... .... .... .... .... 7, 8
Bearings Spindle Adjustment .... .... .... .... .... 9
Bed of Lathe .... .... .... .... .... .... .... 7
Belts .... .... .... .... .... .... .... .... .... 7, 8, 76, 77
Bench Mounting of Lathe .... .... .... .... .... .... 5
Bevel Gears .... .... .... .... .... .... .... .... 80, 81
Boring .... .... .... .... .... .... .... .... 19, 68, 69
Boring Table .... .... .... .... .... .... .... 68, 69
Brass, Machining .... .... .... .... .... .... .... 18, 22
Brass Threads ..... ..... ..... ..... ..... ..... ..... 103
British Association Threads .... .... .... .... .... 50, 104
British Standard Threads .... .... .... .... .... .... 50, 102, 103
Bronze, Machining .... .... .... .... .... .... .... 22

Calipers .... .... .... .... .... .... .... .... 23, 24, 29
Capstan Lathe .... .... .... .... .... .... .... 73
Carriage, Lathe .... .... .... .... .... .... .... 10
Carriage Stops .... .... .... .... .... .... .... 69, 70
Carriers .... .... .... .... .... .... .... .... 30
Case-Hardening .... .... .... .... .... .... .... 86
Cast Iron, Machining .... .... .... .... .... .... 20
Centres, Lathe .... .... .... .... .... .... .... 28–32
Centres, Special .... .... .... .... .... .... .... 40, 70, 71
Centres, Locating .... .... .... .... .... .... .... 29
Centre Drill .... .... .... .... .... .... .... .... 28, 29, 30
Chain Drives .... .... .... .... .... .... .... 77, 78
Change Gears .... .... .... .... .... .... .... 10, 53–55
Chip Breakers .... .... .... .... .... .... .... 19
Chuck, 4 Jaw Independent .... .... .... .... .... .... 33, 34
Chuck, 3 Jaw Self Centring .... .... .... .... .... 34–36
Chuck Collet .... .... .... .... .... .... .... 37
Chuck Drill .... .... .... .... .... .... .... .... 39, 40
Chuck, Mounting .... .... .... .... .... .... .... 35, 36
Clearance Angles .... .... .... .... .... .... .... 13–22, 56
Collets .... .... .... .... .... .... .... .... 37
Collet Rack .... .... .... .... .... .... .... .... 70
Compound Rest .... .... .... .... .... .... .... 10, 44

Copper, Machining .... .... .... .... .... .... .... 22
Coolants .... .... .... .... .... .... .... .... 21, 62, 82
Countershaft .... .... .... .... .... .... .... 11
Crotch Centre .... .... .... .... .... .... .... 40, 70–71
Cut-off Slide .... .... .... .... .... .... .... 72
Cutting Speeds .... .... .... .... .... .... .... 19–22

Decimal Equivalents .... .... .... .... .... .... 100
Depth of Cut .... .... .... .... .... .... .... 20
Distortion of Workpiece .... .... .... .... .... .... 22, 38
Draw in Collet Chuck .... .... .... .... .... .... 37
Drilling .... .... .... .... .... .... .... .... 39–43
Drill Pad .... .... .... .... .... .... .... .... 40, 71
Drill—Sharpening .... .... .... .... .... .... .... 40, 41
Drilling Speeds .... .... .... .... .... .... .... 42
Drill Sizes .... .... .... .... .... .... .... .... 43, 100
Drip Can .... .... .... .... .... .... .... .... 70

Face Plate .... .... .... .... .... .... .... .... 38
Facing Tools .... .... .... .... .... .... .... 17
Feeds .... .... .... .... .... .... .... .... 20
Filing .... .... .... .... .... .... .... .... 22, 63
Finish Turning .... .... .... .... .... .... .... 20, 22
Finish—Allowance for .... .... .... .... .... .... 21, 22

Gauges, Plug .... .... .... .... .... .... .... 27
Gauges, Screw Thread .... .... .... .... .... .... 56
Gauges, Snap .... .... .... .... .... .... .... 27
Gear Box .... .... .... .... .... .... .... .... 53
Gearing .... .... .... .... .... .... .... .... 78–81
Gears, Change .... .... .... .... .... .... .... 10, 53–55
Gibs, Adjustable .... .... .... .... .... .... .... 10
Grinding Lathe Tools .... .... .... .... .... .... 15
Grinding Wheels .... .... .... .... .... .... .... 87, 88

Half Nuts .... .... .... .... .... .... .... .... 10, 52, 57
Hardening .... .... .... .... .... .... .... .... 84
Headstock .... .... .... .... .... .... .... .... 7–10
Heat Treatment .... .... .... .... .... .... .... 84–87
Helical Gears .... .... .... .... .... .... .... 80
Helix Angle .... .... .... .... .... .... .... .... 49, 80
High Speed Steel, Hardening .... .... .... .... .... 87

Index Head .... .... .... .... .... .... .... .... 67, 68
Internal Threads .... .... .... .... .... .... .... 58
International Standard Thread .... .... .... .... .... 51

Knurling .... .... .... .... .... .... .... .... 64, 65

Lapping ..... .... .... .... .... .... .... .... 64
Lathe, Care and Construction of .... .... .... .... .... 5–11
Left Hand Threads .... .... .... .... .... .... .... 58
Legs, Mounting of Lathe .... .... .... .... .... 5–7
Live Centre .... .... .... .... .... .... .... .... 30–31

Lubrication .... 6, 7
Lubricants, Cutting .... 21, 62, 82

Machining of Various Materials .... 18–22
Mandrel .... 31, 32, 99
Measurements .... 23–27
Metric Equipment .... 74
Metric Chasing Dial Chart .... 75
Metric Threads .... 51, 60, 105
Micrometer .... 24, 25
Micrometer Saddle Stop .... 70
Milling Arbor .... 67, 68
Milling Attachment .... 66–68
Module .... 79
Multiple Threads .... 59

Nylon, Machining .... 21, 22

Oiling Lathe .... 6–7

Parting Tool .... 18
Pipe Centre .... 31
Picking up Thread .... 57, 58
Plastics, Machining .... 21, 22
Polishing .... 22, 63
Power Feed Mechanism .... 8, 10
Pulley Dimensons .... 76, 77

Quenching .... 84
Quick Change Gear Box .... 53

Rake Angles .... 13–22
Reaming .... 43
Reamers, Adjustable .... 43
Rough Turning .... 15
Rubber, Machining .... 21, 22

SAE Thread .... 102
Screw Centre .... 71
Screw Cutting .... 49–62
Screw Cutting, Examples .... 92, 93
Screw Thread Systems .... 50–52, 102–105
Screw Thread Data .... 49, 50, 102–105
Screw Thread Measuring .... 61, 62
Set over, Tailstock .... 44, 45
Slipping Teeth on Change Gears .... 59, 60
Special Threads .... 61
Speeds, Drilling .... 42
Speeds, Turning .... 19–22
Speeds of Lathe Spindle .... 8
Speeds, Surface .... 21
Speeds, Wood Turning .... 71
Sprocket Dimensions .... 78
Spur Centre .... 71

Spur Gears .... .... .... .... .... .... .... .... 78, 79
Square Threads .... .... .... .... .... .... .... 51, 52, 56
Square Turret .... .... .... .... .... .... .... 69, 73
Stainless Steel, Machining .... .... .... .... .... .... 22
Steady Rests .... .... .... .... .... .... .... 28, 29, 65, 66
Steel, Machining .... .... .... .... .... .... .... 19–20
Steel, Properties of .... .... .... .... .... .... .... 82–84

Tailstock .... .... .... .... .... .... .... .... 11
Tapers, Standard .... .... .... .... .... .... .... 101
Taper Boring .... .... .... .... .... .... .... 46, 47
Taper Turning .... .... .... .... .... .... .... 44–48
Taper Turning Attachment .... .... .... .... .... 45–47
Tapping .... .... .... .... .... .... .... .... 61
Tapping Sizes .... .... .... .... .... .... .... 102–104
Tempering .... .... .... .... .... .... .... .... 84, 85
Thread Chasing Dial .... .... .... .... .... .... 57, 58
Thread Chasing Dial, Metric ..... ..... ..... ..... ..... 74
Tool Angles .... .... .... .... .... .... .... .... 13–22
Tool Bits .... .... .... .... .... .... .... .... 13
Tools, Grinding and Application .... .... .... .... .... 13–22, 85
Tool Holder .... .... .... .... .... .... .... 13
Tungsten Carbide Tools .... .... .... .... .... .... 20
Turret Attachment .... .... .... .... .... .... .... 73

Unit Drive .... .... .... .... .... .... .... .... 11, 12
USS Threads .... .... .... .... .... .... .... 50, 51

Vee Belts .... .... .... .... .... .... .... .... 77
Vee Pulleys .... .... .... .... .... .... .... 77
Vernier .... .... .... .... .... .... .... .... 26

Whitworth Thread .... .... .... .... .... .... .... 50, 102
Wood Turning .... .... .... .... .... .... .... 71, 72
Worm Threads .... .... .... .... .... .... .... 52