HONDA

HONDA CX500TCc

PARTS CATALOGUE
CATALOGUE DE PIECES
TEILE KATALOG

1

INDEX	INDEX	INDEX	
BLOCKINDEX	INDEX DES BLOCS	BLOCK INDEX	1
EINFÜHRUNG (Verwendung dem Teile-Katalog)	INSTRUCTIONS (Mode d'emploi du catalogue de pièces)	INSTRUCTIONS (Use of parts catalogue)	2
MOTORGRUPPE	GROUPE MOTEUR	ENGINE GROUP	3
RAHMENGRUPPE	GROUPE CADRE	FRAME GROUP	4
TEILE-Nr. INDEX	INDEX DE Nº DE PIECE	PART No. INDEX	5

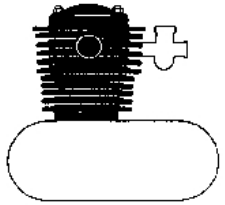

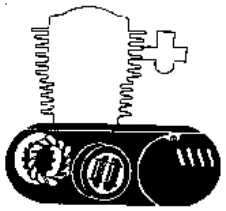

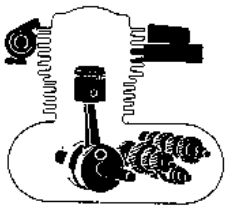

E- 1	Cylinder head cover	C 2
E- 2	Right cylinder head	C 3
E- 3	Left cylinder head	C 5
E- 4	Thermostat · Water pipe	C 7
E- 5	Valve · Upper rocker arm	C 8

E- 6	Camshaft · Lower rocker arm	C 9
E- 7	Clutch cover · Oil filter	C10
E- 8	Transmission cover	C11
E- 9	Clutch	C12
E-10	Oil pump · Primary drive gear	C13
E-11	Water pump · Pulse generator	C15
E-12	Starting motor	C16
E-13	Rear cover	D 1
E-14	Generator	D 2
E-15	Cam chain · Tensioner	D 3
E-16	Final shaft	D 4
E-17	Cylinder block	D 5
E-18	Oil pan	D 6

E-19	Camshaft · Piston	D 7
E-20	Transmission	D 8
E-21	Shift drum · Shift fork	D10
E-22	Turbo pump	D12
E-23	Throttle body · Intake manifold	D15
E-24	Air valve · Reed valve	E 1

E- 1	Couvercle de culasse	C 2
E- 2	Culasse droit	C 3
E- 3	Culasse gauche	C 5
E- 4	Thermostat · Tuyau d'eau	C 7
E- 5	Soupape · Culbuteur supérieur	C 8

E- 6	Arbre à cames · Culbuteur inférieur	C 9
E- 7	Couvercle d'embrayage · Filtre à huile	C10
E- 8	Couvercle de transmission	C11
E- 9	Embrayage	C12
E-10	Pompe à huile · Pignon commande primaire	C13
E-11	Pompe à eau · Generateur d'impulsions	C15
E-12	Moteur démarrage	C16
E-13	Couvercle arrière	D 1
E-14	Générateur	D 2
E-15	Chaîne de cames · Tendeur	D 3
E-16	Arebre final	D 4
E-17	Bloc moteur	D 5
E-18	Carter inférieur	D 6

E-19	Arbre à cames · Piston	D 7
E-20	Transmission	D 8
E-21	Tambour de changement de vitesse · Fourchette de changement	D10
E-22	Pompe à turbo	D12
E-23	Corps de papillon · Collecteur d'admission	D15
E-24	Soupape d'air · Soupape d'anche	E 1

E- 1	Zylinderkopfdeckel	C 2
E- 2	Rechter Zylinderkopf	C 3
E- 3	Linker Zylinder kopf	C 5
E- 4	Thermostat · Wasserrohr	C 7
E- 5	Ventil · Oberer Kipphebel	C 8

E- 6	Nockenwelle · Unterer Kipphebel	C 9
E- 7	Kupplungsdeckel · Ölfilter	C10
E- 8	Getriebedeckel	C11
E- 9	Kupplung	C12
E-10	Ölpumpe · Primäres Antriebszahnrad	C13
E-11	Wasserpumpe · Impulsgeber	C15
E-12	Anlassermotor	C16
E-13	Hinterdeckel	D 1
E-14	Lichtmaschine	D 2
E-15	Steuerkette · Spanner	D 3
E-16	Endwelle	D 4
E-17	Zylinderblock	D 5
E-18	Ölwanne	D 6

E-19	Nockenwelle · Kolben	D 7
E-20	Getriebe	D 8
E-21	Schaltwalze · Schaltgabel	D10
E-22	Turbopumpe	D12
E-23	Drosselkörper · Einlasskrümmer	D15
E-24	Luftventil · Plättchenventil	E 1

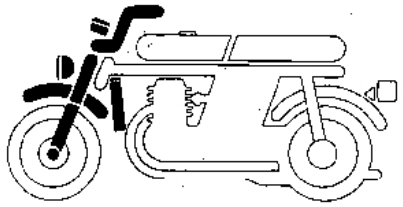

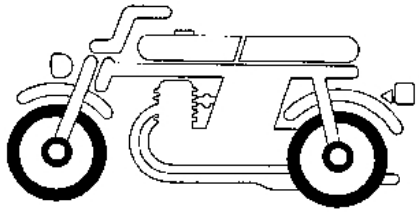

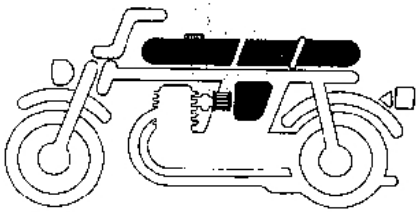

F- 1 Radiator · Cooling fan ..... F 2
F- 2 Front combination light (B,CM,E,ED,F,IT,SA,U) ..... F 3
F- 2-1 Front combination light (G,H,SW) ..... F 5
F- 3 Combination meter ..... F 7
F- 4 Handle lever · Switch · Cable F10
F- 5 Front brake master cylinder F11
F- 6 Handle pipe · Top bridge · Key set F12
F- 7 Steering stem · Horn F14
F- 8 Front fender F15
F- 9 Front fork F16

F-10 Front brake caliper ..... G 4
F-11 Front wheel · Disk ..... G 6
F-12 Rear brake master cylinder ..... G 8
F-13 Rear brake caliper ..... G 9
F-14 Rear wheel G10
F-15 Final driven gear G11

F-16 Fuel tank G15
F-17 Seat · Rear cowl ..... H 1
F-18 Side cover · Battery ..... H 2
F-19 Spark unit · Sensor ..... H 5
F-20 Air cleaner ..... H 7

F- 1 Radiateur · Ventilateur ..... F 2
F- 2 Eclairage avant combiné (B,CM,E,ED,F,IT,SA,U) ..... F 3
F- 2-1 Eclairage avant combiné (G,H,SW) ..... F 5
F- 3 Compteur combiné ..... F 7
F- 4 Levier de poignée · Interrupteur · Câble F10
F- 5 Maître cylindre de frein avant F11
F- 6 Guidon · Haut de fourche · Jeu de clés F12
F- 7 Tige de direction · Avertisseur F14
F- 8 Garde-boue avant F15
F- 9 Fourche avant F16

F-10 Etrier de frein avant ..... G 4
F-11 Roue avant · Disque ..... G 6
F-12 Maître cylindre de frein arrière ..... G 8
F-13 Etrier de frein arrière ..... G 9
F-14 Roue arrière G10
F-15 Engrenages de réduction finale G11

F-16 Réservoir d'essence G15
F-17 Siege · Auvent arrière ..... H 1
F-18 Couvercle latéral · Batterie ..... H 2
F-19 Unité d'allumage · Transmetteur ..... H 5
F-20 Filtre à air ..... H 7

F- 1 Kühler · Kühlgebläse ..... F 2
F- 2 Vorderkombinationslicht (B,CM,E,ED,F,IT,SA,U) ..... F 3
F- 2-1 Vorderkombinationslicht (G,H,SW) ..... F 5
F- 3 Kombinationsmesser ..... F 7
F- 4 Lenkstangenhebel · Schalter · Kabel F10
F- 5 Vorderradbremse—Hauptzylinder F11
F- 6 Lenkrohr · Obere Brücke · Schloßsatz F12
F- 7 Steuerkopfschaft · Hupe F14
F- 8 Vorderer Kotflügel F15
F- 9 Vordergabel F16

F-10 Vorderradbremssattel ..... G 4
F-11 Vorderrad · Bremsscheibe ..... G 6
F-12 Hinterradbremse—Hauptzylinder ..... G 8
F-13 Hinterrad—Bremssattel ..... G 9
F-14 Hinterrad G10
F-15 Endabtriebsgetriebe G11

F-16 Benzintank G15
F-17 Sitz · Hintere Verkleidung ..... H 1
F-18 Seitendeckel · Batterie ..... H 2
F-19 Zündeinheit · Sensor ..... H 5
F-20 Luftfilter ..... H 7

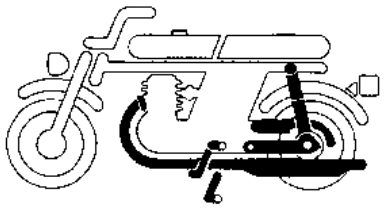

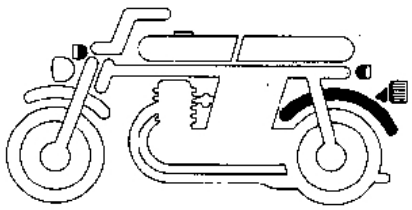

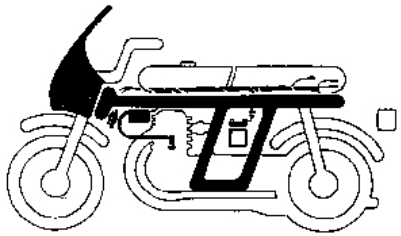

F-21	Exhaust muffler	H 9
F-22	Brake pedal · Change pedal	H10
F-23	Step	H11
F-24	Stand	H14
F-25	Rear fork	H15
F-26	Rear cushion	I 1

F-27	Rear fender	I 3
F-28	Winker	I 5
F-29	Taillight	I 8

F-30	Wire harness · Ignition coil	I 9
F-31	Frame body	I 10
F-32	Reserve tank · Breather separator	I 12
F-33	Fuel pump · Tool box	I 14
F-34	Tool	I 16
F-35	Wind screen	J 1
F-36	Fairing	J 3
F-37	Cowl stay	J 5
F-38	Stripe	J 6
F-39	Mark	J 8

F-21	Pot d'échappement	H 9
F-22	Pédale de frein · Pédale de changement	H10
F-23	Repose pieds	H11
F-24	Bequille	H14
F-25	Fourche arrière	H15
F-26	Amortisseur arrière	I 1

F-27	Garde-boue arrière	I 3
F-28	Clignotant	I 5
F-29	Feu arrière	I 8

F-30	Faisceau électrique · Bobine d'allumage	I 9
F-31	Cadre	I 10
F-32	Réservoir · Séparateur de respiration	I 12
F-33	Pompe à essence · Boîtier d'outils	I 14
F-34	Outils	I 16
F-35	Pare-brise	J 1
F-36	Profilage	J 3
F-37	Appui d'auvent	J 5
F-38	Rayure	J 6
F-39	Marque	J 8

F-21	Auspufftopt	H 9
F-22	Bremspedal	H10
F-23	Tritt	H11
F-24	Ständer	H14
F-25	Hinterer Schwinge	H15
F-26	Hinterer Stoßdämpfer	I 1

F-27	Hinterer Kotflügel	I 3
F-28	Blinker	I 5
F-29	Rücklicht	I 8

F-30	Kabelbaum · Zündspule	I 9
F-31	Rahmen	I 10
F-32	Reservetank · Entfufterseparator	I 12
F-33	Benzinpumpe · Werkzeugkasten	I 14
F-34	Werkzeug	I 16
F-35	Windscheibe	J
F-36	Verkleidung	J 3
F-37	Verkleidungsstütze	J 5
F-38	Streifen	J 6
F-39	Marke	J 8

PHOTO COMPS.

1 p/p 3cm WIDE

20%

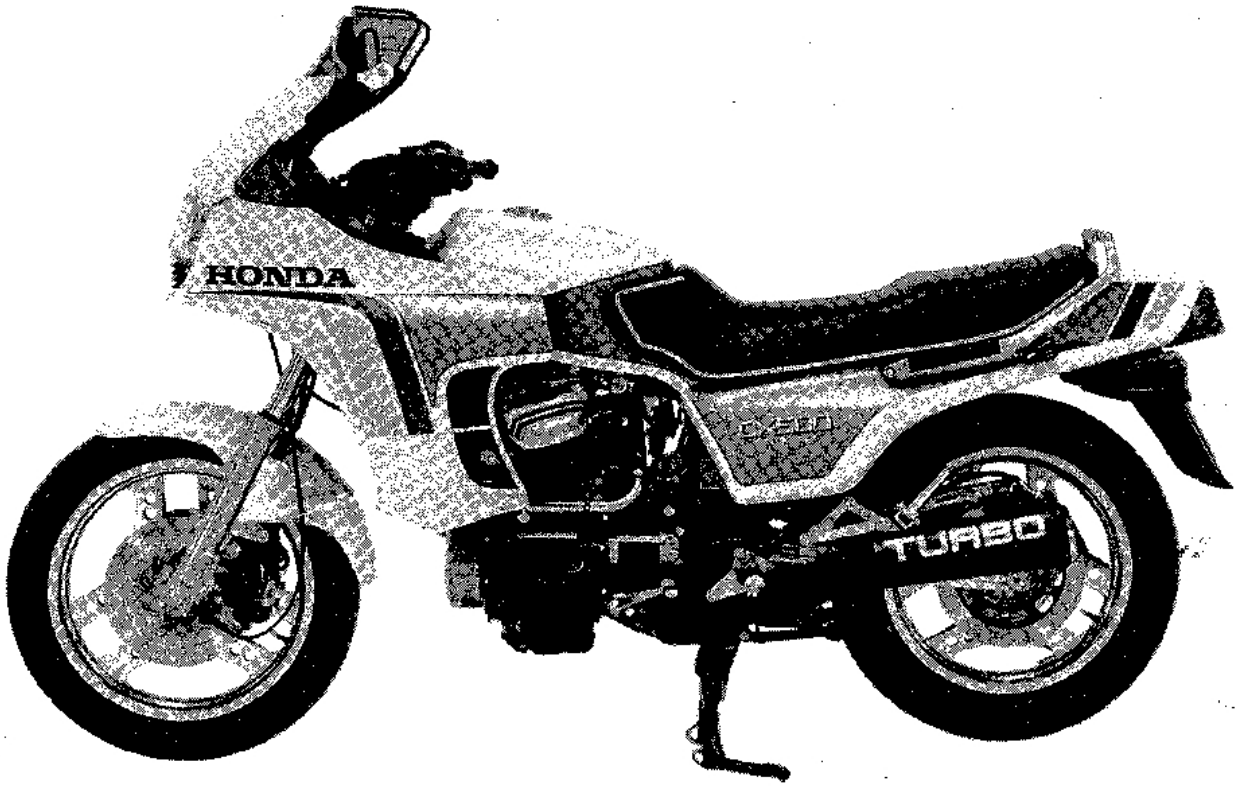

CX500TCc

INSTRUCTION FOR USE OF PARTS CATALOGUE

This parts catalogue is compiled all service parts and flat rate time (F.R.T.) for model CX500TCc.

The languages used in this parts catalogue are arranged in alphabetical order in English. (English—French—German)

I. How to order parts

1. Information required

Replacement parts orders must contain both the **part number** and the **stamped number(s)** as described below. This is because any changes and modifications of parts are registered at HONDA with the pertinent parts and stamped numbers.

Numbers needed :

(a) Throttle body parts :	Part number and Stamped throttle body identification number
(b) Engine parts :	Part number and Stamped engine number
(c) Frame parts :	Part number and Stamped frame number
(d) Final driven gear parts :	Part number and Stamped final driven gear number

2. Revisions

When modifications or additions to this parts catalogue are made, a revised edition will be issued at an appropriate time, with successively progressing revision numbers on the cover.

We recommend obtaining such revisions in order to keep your parts catalogue up-to-date at all times. To check whether a parts catalogue revision has been issued, please contact your HONDA distributor.

II. How to read this parts catalogue

1. Make-up of the part number

(Example) General parts

○ ○ ○ ○ ○ – ○ ○ ○ – ○ ○ ○ ○ ○

- Function and component No.
- Model code No.
- Modification designation
- Subcontractor designation
- Color code

(Example) Bolts, nuts and other standard parts

○ ○ ○ ○ ○ – ○ ○ ○ ○ ○ – ○ ○

- Function and type No.
- Dimension
- Chemical surface treatment
- ISO

2. Color codes

The color code at the end of the part number indicates the color. Codes below ZA in alphabetical order (such as ZA, ZB, ZC, etc.) do not indicate the color directly, but reference must be made to the HONDA code given in the "Description" column of this parts catalogue.

Color code HONDA code	Color description
NH-1	Black
NH-105	Mat Black
NH-113P-A	Pearl altair white A
NH-114M-U	Moonstone silver metallic-U
YR-112M-U	Super gold metallic-U

3. Abbreviations

The following abbreviations are used in this parts catalogue.

ASSY.	Assembly	KPH	Kilometers per hour
COMP.	Complete	MPH	Miles per hour
R.	Right	L (100L)	Link (100Links)
L.	Left	A.C.	Alternating current
STD.	Standard	D.C.	Direct current
MM	Millimeter	IN.	Inlet
G.	Gram	EX.	Exhaust
T (22T)	Tooth (22Teeth)	FR.	Front
A.	Ampere	RR.	Rear
V.	Volt	HEX.	Hexagonal
W	Watt	A.M.	Attaching mark
		T.M.	Transcript mark

4. Dimensions

All dimensions are given in millimeters (mm) except in the case of steel balls, tires and tire tubes.

Parts	Example	Interpretation
Bolt (Screw)	6×12	6mm diameter, 12mm length
Pin	8×14	8mm diameter, 14mm length
O-ring	9.5×1.6	9.5mm diameter, 1.6mm thickness
Oil seal	14×24×5	14mm inside diameter, 24mm outside diameter, 5mm thickness
Tube	5×130	5mm inside diameter, 130mm length

5. Supersedence of parts

Part numbers given under the part name in the "Description" column indicate that the part number has been superseded by that part number. HONDA may make such supersedence without notice.

6. Assemblies

Sections framed with broken lines in the exploded view drawings are available as complete assemblies. (Their individual parts can also be obtained.)

7. Required quantity

The number given in the "Reqd. No." column indicates the quantity of parts used in the section described in that block.

Parts with quantities in ( ) represent optional parts.

"N" means order as needed.

8. Part modifications and applicable serial numbers

In cases where a part has been modified, the serial number of the first vehicle (or frame, engine, throttle body, final driven gear) bearing the modification is listed in the "Serial No." column.

9. Models, area codes and applicable serial numbers

Models, area codes and applicable serial Nos. given in this parts catalogue can be identified as follows.

Parts with area codes are exclusive for models destined for countries designated.

If no area codes are listed, parts are for common use.

Model	Area code	Type	Applicable engine serial No.	Applicable frame serial No.	Applicable throttle body identification No.	Applicable final driven gear serial No.
CX500TCc	G	Germany	PC03E-2000050~	PC03-2000037~	GA01A [A] ~	F-6000037~
	E	England	PC03E-2000658~	PC03-2000598~		
	F	France	These types are not yet produced.			
	ED	European direct sales				
	U	Australia				
	CM	Canada				
	IT	Italy				
	SA	South Africa				
	B	Belgium				
	SW	Switzerland				
	H	Netherland				

* Of throttle body identification numbers, only the portions underlined in the example below are used for registration.

GA01A [A] TG ク

10. Location of stamped serial number

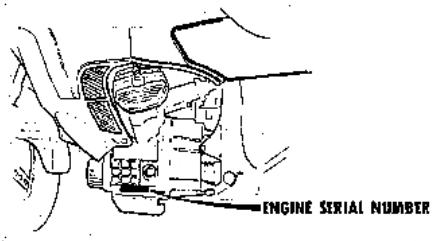

BMC7-0C

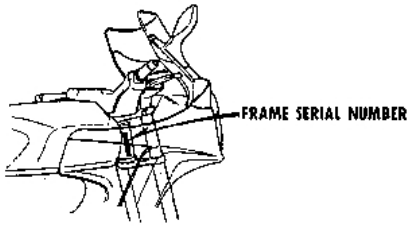

BMC7-0A

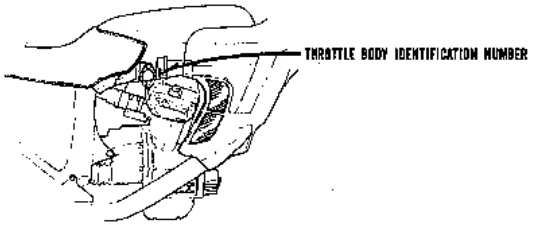

BMC7-0D

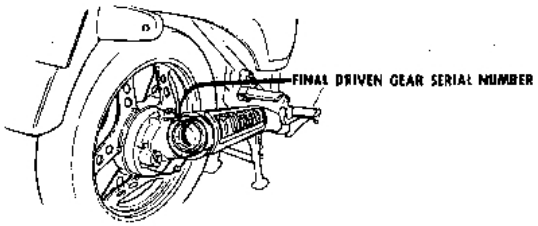

BMC7-0B

11. Construction of vehicle identification number (V.I.N.)

W.M.I. V.D.S. V.I.S.

(Example) J H 2 R C 0 4 0 * B M 2 0 0 0 0 1

Sequential Production number

Plant representation

C .....SAITAMA factory in JAPAN
K .....KUMAMOTO factory in JAPAN
M.....HAMAMATSU factory in JAPAN
S .....SUZUKA factory in JAPAN
A .....OHIO factory in U.S.A.
B .....AALST factory in BELGIUM

Model year

B.....1981 C.....1982 D.....1983

Check digit

This code is used to detect errors in the V.I.N. and consists of a single-digit number (0-9) or a letter "X". It has no direct bearing upon the V.D.S. and V.I.S.

Vehicle description code

(Example) RC040.....CB750F NC030.....CB400T
Refer to ; Item No. 10

Make and Type of vehicle

JH2.....HONDA, Motorcycle (Manufactuered in JAPAN)
1HF.....HONDA, Motorcycle (Manufactuered in U.S.A.)
YC1.....HONDA, Motorcycle (Manufactuered in BELGIUM)

W.M.I. .....World manufactuer identifier
V.D.S. .....Vehicle descriptor section
V.I.S. .....Vehicle indicator section

Any change or modification of parts is directly related to the V.D.S. and V.I.S. A V.I.S. number will appear in the "Serial No." column of the Parts Catalog if a part is changed or modified.

III. How to use the flat rate time (F.R.T.)

This F.R.T. (Flat Rate Time) is used to determine the standard labor time allowed for replacement of parts covered by the warranty during the period the warranty is in effect. The F.R.T. for those parts which are not listed herein should be determined from the operation closely related to the replacement of that part.

1. The F.R.T. is based on the following servicing conditions.

a. A liberal allowance is added to the net servicing time.

b. Standard times specified are based on the condition that the necessary servicing tools listed in the service manual (motorcycle) which describes the HONDA service policy are available close at hand and the work performed by a mechanic with normal skill.

c. Time required for inspection and operational test following the servicing is included in the F.R.T.

2. Method of computing

The job times are listed in tenth of an hour to simplify computation.

(Example) 0.3 = 18 minutes

5.6 = 5 hours and 36 minutes

CONVERSION CHART			
Hours	**Minutes**	**Hours**	**Minutes**
0.1	6	0.6	36
0.2	12	0.7	42
0.3	18	0.8	48
0.4	24	0.9	54
0.5	30	1.0	60

3. Computing the F.R.T.

When several jobs are performed at the same time, make the calculation in the following manner.

a. Jobs of non duplicated nature

The F.R.T. for the job is obtained by totalling the F.R.T. for each part replaced.

(Example) Replacement of cylinder head cover and clutch spring.

Service item	F.R.T.
Cylinder head cover	0.2
Clutch spring	0.6

The F.R.T. for the job is : 0.2+0.6=0.8

b. Jobs of duplicated nature

Take the F.R.T. for the last part to be replaced.

(Example) Replacement of piston and cylinder head gasket.

Service item	F.R.T.
Cylinder head gasket	3.1
Piston	4.1

The F.R.T. for the job is : 4.1

c. Jobs of partially related nature

Total up the F.R.T. for all of the parts replaced and then subtract the F.R.T. for the duplicated operation.

(Example) Replacement of gearshift drum and stator.

Service item	F.R.T.
Gearshift drum	*5.4
Stator	*4.4
Cover RR. Separation	*4.1

The F.R.T. for the job is : (5.4+4.4)−4.1=5.7

Crankcase disassembly is the duplicated operations.

● The F.R.T. shown with (*) includes engine removal and installation.

4. Operations other than replacing parts

a. Removal and installation

No.	Service item	F.R.T.
1	Engine	3.7
2	Radiator	3.1
3	Turbocharger	1.9
4	Radiator	1.1
5	Final driven gear	0.5

b. Adjustment, measurement and cleaning

Engine

No.	Service item	F.R.T.
1	Spark plug-adjustment and cleaning	0.2
2	Tappet adjustment	0.7
3	idle-adjustment	0.2
4	Engine oil-inspection (excluding oil change)	0.1
5	Clutch-adjustment	0.2
6	Cleaner element-cleaning	0.1
7	Compression-pressure measurement	0.2
8	Battery-checking of electrolyte level and gravity	0.2
9	Oil filter cleaning	0.2
10	Throttle operation-adjustment	0.1
11	Exterior of radiator corecleaning	0.3

Frame

No.	Service item	F.R.T.
1	Front brake-air bleading	0.1
2	Rear brake-air bleading	0.1
3	Brake-operation test	0.1
4	Headlight-aimings	0.2
5	Front wheel balance	0.8
6	Rear wheel balance	0.9

c. Overhaul

No.	Service item	F.R.T.
1	Final driven gear	2.2

October 20, 1981

HONDA MOTOR CO., LTD.

MEMO

C 2

E-1

Cylinder head cover

Couvercle de culasse

Zylinderkopfdeckel

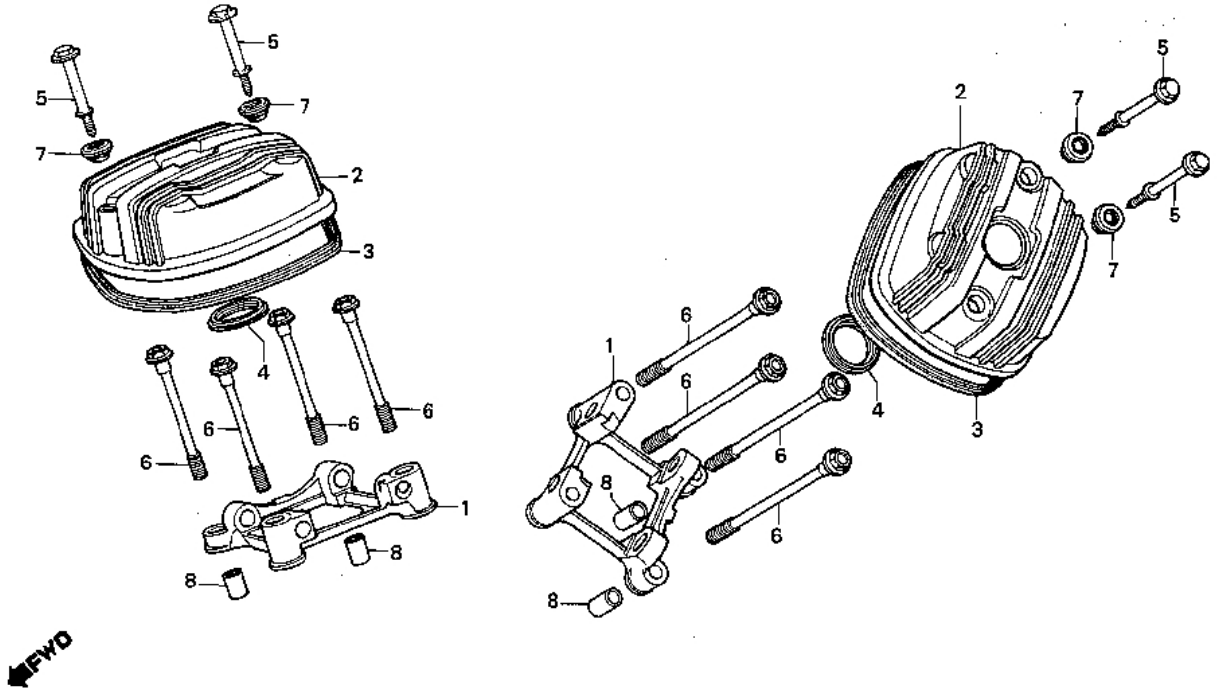

Service item	F.R.T.	Ref. No.	Part No.	Description	Reqd. No. CX500TCc	Serial No.	Area code
HOLDER, VALVE ROCKER ARM	0.8	1	12215-415-000	HOLDER, VALVE ROCKER ARM	2		
(ADD 0.5 FOR EACH.)		2	12311-MC7-000	COVER, CYLINDER HEAD	2		
COVER, CYLINDER HEAD	0.2	3	12328-415-000	GASKET, HEAD COVER	2		
GASKET, HEAD COVER	0.1	4	12329-415-000	GASKET, PLUG HOLE	2		
		5	90016-MC7-000	BOLT, SPECIAL, 6X60	4		
		6	90021-415-000	BOLT, FLANGE, 12X150	8		
		7	90541-371-000	RUBBER, MOUNTING	4		
		8	94301-14200	PIN A, DOWEL, 14X20	4		

C 3

E-2

Right cylinder head

Culasse droit

Rechter Zylinderkopf

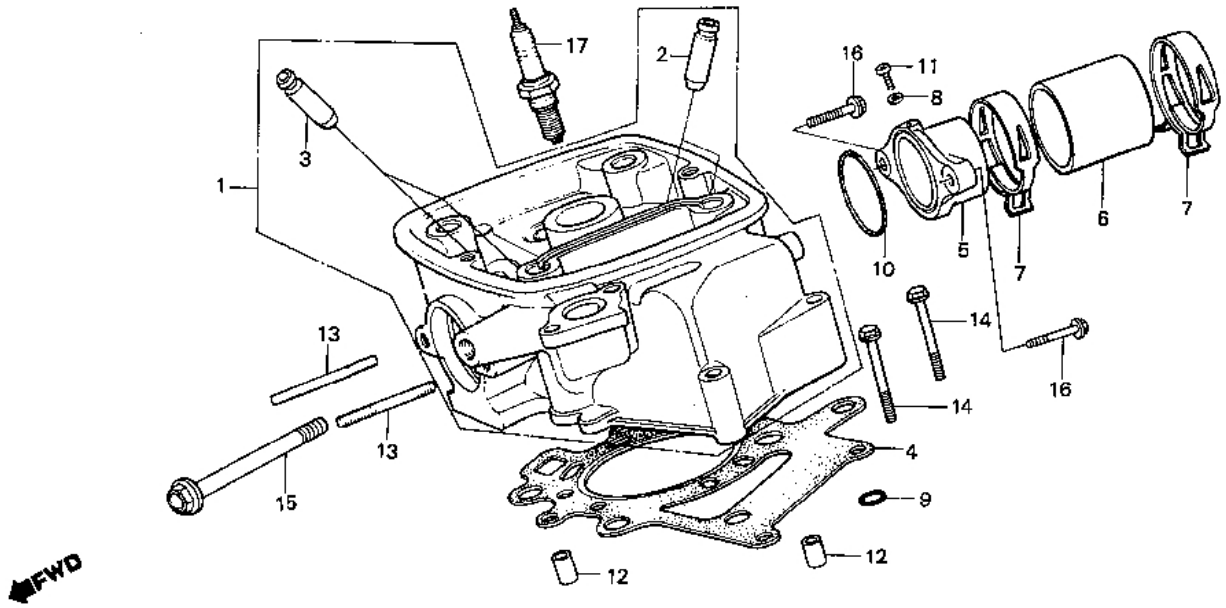

BMC7-7

Service item	F.R.T.	Ref. No.	Part No.	Description	Reqd. No. CX500TCc	Serial No.	Area code
HEAD COMP., CYLINDER	4.0	1	12200-MC7-000	HEAD COMP., R. CYLINDER	1		
(ADD 1.5 FOR EACH.)		2	12231-MC7-305	GUIDE, IN. VALVE	2		
GUIDE, VALVE	3.4	3	12241-MA1-305	GUIDE, EX. VALVE	2		
(INC. REAMING)		4	12251-MC7-000	GASKET, CYLINDER HEAD	2		
(ADD 0.2 FOR EACH.)		5	17113-MC7-000	JOINT, R. IN.	1		
(EXC. VALVE REFACING)							
(ADD MORE 0.2 IF PERFORMED.)		6	17115-MC7-003	INSULATOR, IN.	1		
GASKET, CYLINDER HEAD	3.1	7	17118-MC7-003	BAND, IN. MANIFOLD	2		
(ADD 0.6 FOR EACH.)		8	90452-323-000	WASHER, THRUST, 5MM	1		
JOINT, IN.	0.3	9	91302-044-013	O-RING, 6.9X1.5	1		
(ADD 0.2 FOR EACH.)		10	91325-567-005	O-RING, 40X2.4	1		
INSULATOR, IN.							
(ADD 0.2 FOR EACH.)		11	93500-05008-0A	SCREW, PAN, 5X8	1		
		12	94301-08140	PIN A, DOWEL, 8X14	2		
		13	90062-MC7-000	BOLT, STUD, 8X43	2		
		14	90068-MC7-000	BOLT, FLANGE, 8X50	2		
		15	95700-10050-00	BOLT, FLANGE, 10X50	1		
		16	96000-06022-00	BOLT, FLANGE, 6X22	2		
		17	98069-57912	PLUG, SPARK (DPR7EV-9 NGK)	(1)		
			98069-57922	PLUG, SPARK (X22EPR-GU9 ND)	(1)		
			98069-58912	PLUG, SPARK (DPR8EV-9 NGK)	1		
			98069-58922	PLUG, SPARK (X24EPR-GU9 ND)	1		
			98069-59912	PLUG, SPARK (DPR9EV-9 NGK)	(1)		

C 4

E-2

Right cylinder head

Culasse droit

Rechter Zylinderkopf

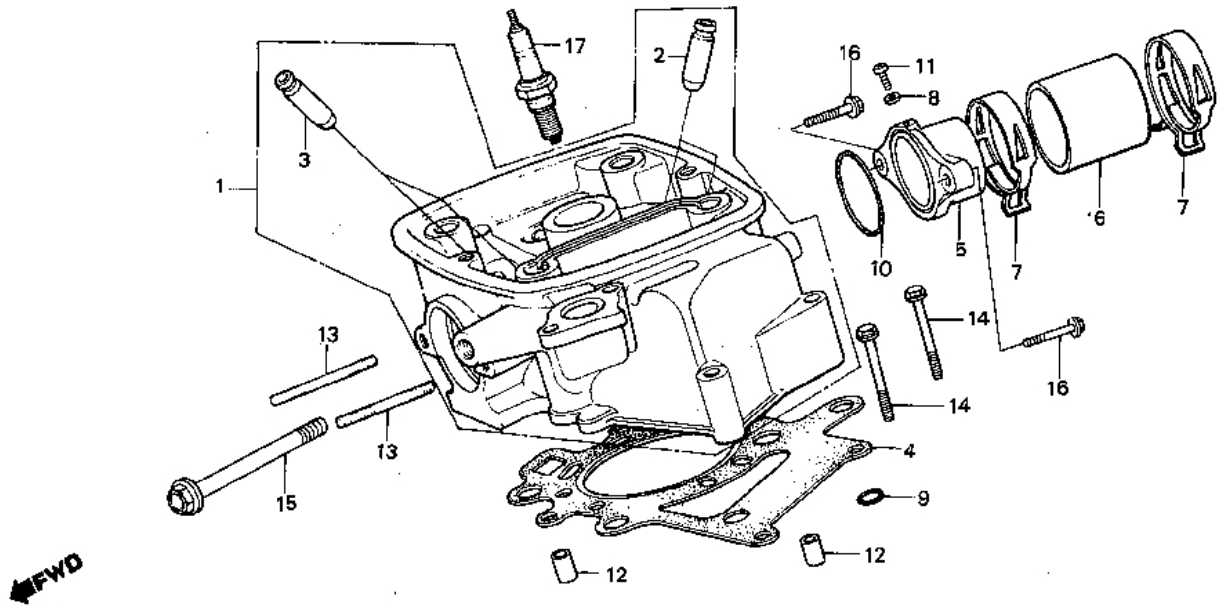

BMC7-7

Service item	F.R.T.	Ref. No.	Part No.	Description	Reqd. No. CX500TCc	Serial No.	Area code
			98069-59922	PLUG, SPARK (X27EPR-GU9 ND)	(1)		

C 5

E-3

Left cylinder head

Culasse gauche

Linker Zylinderkopf

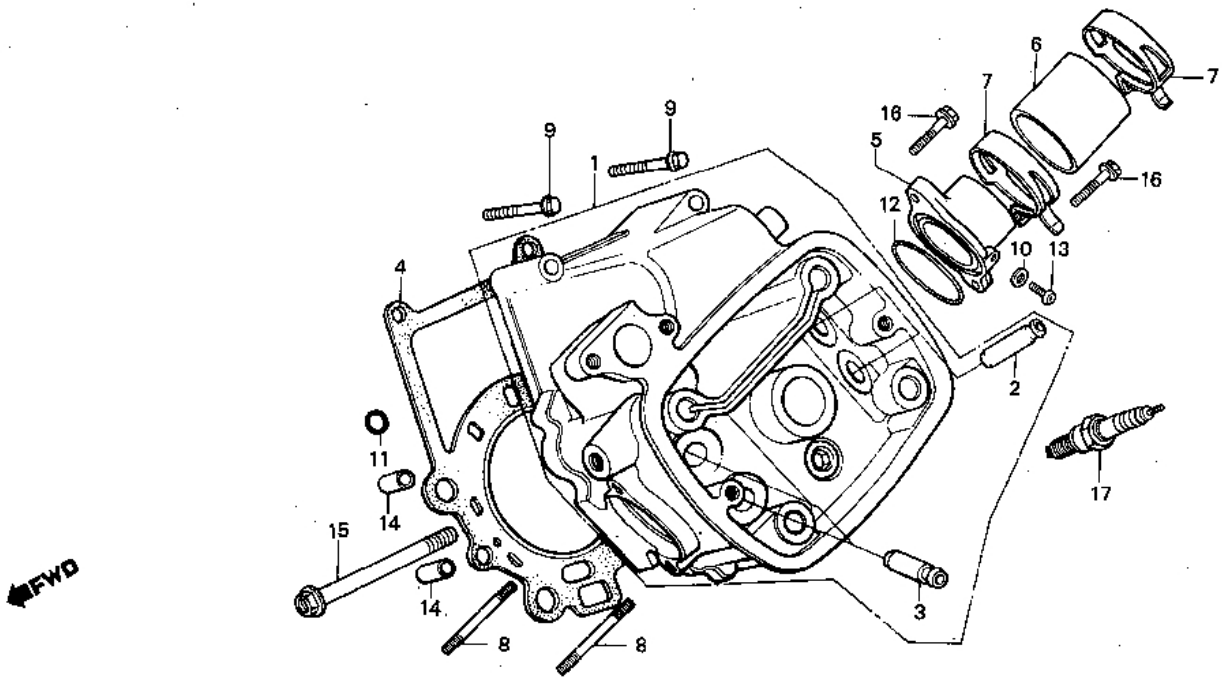

BMC7—B

Service item	F.R.T.	Ref. No.	Part No.	Description	Reqd. No. CX500TCc	Serial No.	Area code
HEAD COMP., CYLINDER	4.0	1	12210-MC7-000	HEAD COMP., L. CYLINDER	1		
(ADD 1.5 FOR EACH.)		2	12231-MC7-305	GUIDE, IN. VALVE	2		
GUIDE, VALVE	3.4	3	12241-MA1-305	GUIDE, EX. VALVE	2		
(INC. REAMING)		4	12251-MC7-000	GASKET, CYLINDER HEAD	1		
(ADD 0.2 FOR EACH.)		5	17114-MC7-000	JOINT, L. IN.	1		
(EXC. VALVE REFACING)							
(ADD MORE 0.2 IF PERFORMED.)		6	17115-MC7-003	INSULATOR, IN.	1		
GASKET, CYLINDER HEAD	3.1	7	17118-MC7-003	BAND, IN. MANIFOLD	2		
(ADD 0.6 FOR EACH.)		8	90062-MC7-000	BOLT, STUD, 8X43	2		
JOINT, IN.	0.3	9	90068-MC7-000	BOLT, FLANGE, 8X50	2		
(ADD 0.2 FOR EACH.)		10	90452-323-000	WASHER, THRUST, 5MM	1		
.INSULATOR, IN.							
(ADD 0.2 FOR EACH.)		11	91302-044-013	O-RING, 6.9X1.5	1		
		12	91325-567-005	O-RING, 40X2.4	1		
		13	93500-05008-0A	SCREW, PAN, 5X8	1		
		14	94301-08140	PIN A, DOWEL, 8X14	2		
		15	95700-10050-00	BOLT, FLANGE, 10X50	1		
		16	96000-06022-00	BOLT, FLANGE, 6X22	2		
		17	98069-57912	PLUG, SPARK (DPR7EV-9 NGK)	(1)		
			98069-57922	PLUG, SPARK (X22EPR-GU9 ND)	(1)		
			98069-58912	PLUG, SPARK (DPR8EV-9 NGK)	1		
			98069-58922	PLUG, SPARK (X24EPR-GU9 ND)	1		
			98069-59912	PLUG, SPARK (DPR9EV-9 NGK)	(1)		

C 6

E-3

Left cylinder head

Culasse gauche

Linker Zylinderkopf

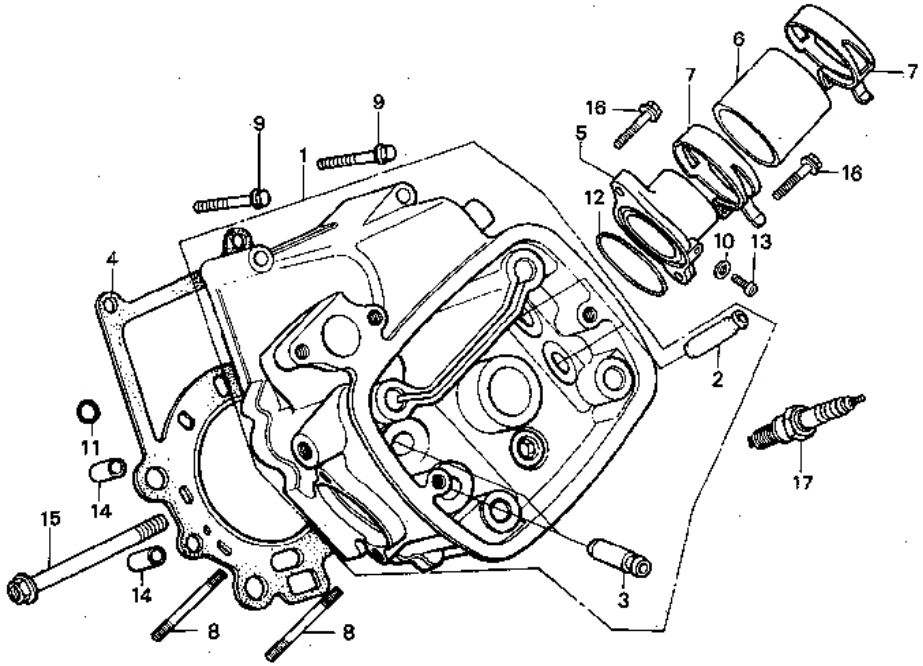

BMC7-8

Service item	F.R.T.	Ref. No.	Part No.	Description	Reqd. No. CX500TCc	Serial No.	Area code
			98069-59922	PLUG, SPARK (X27EPR-GU9 ND)	(1)		

C 7

E-4

Thermostat • Water pipe

Thermostat • Tuyau d'eau

Thermostat • Wasserrohr

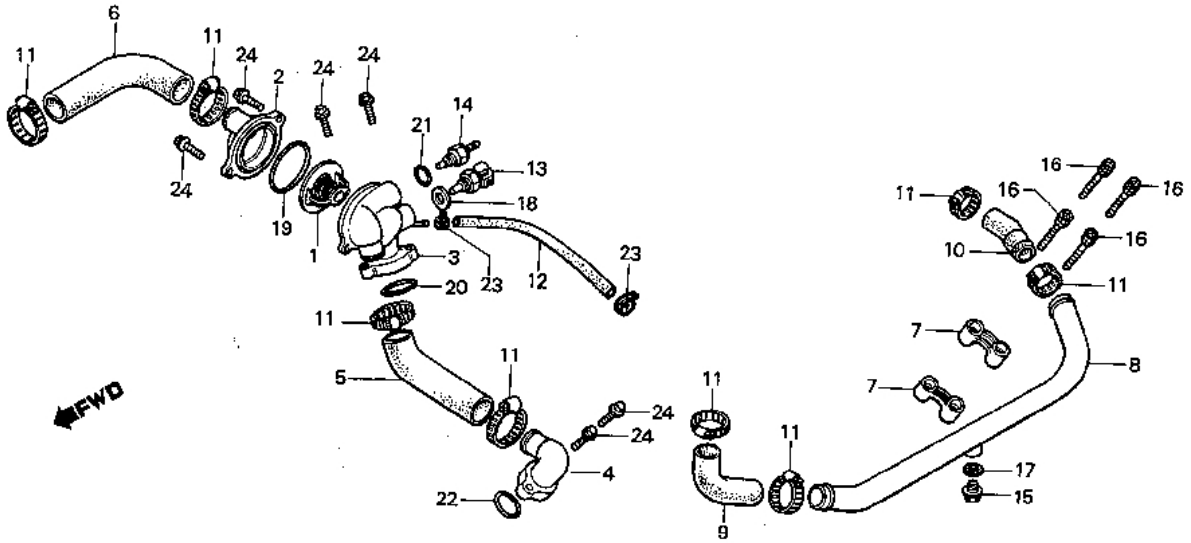

BMC7–9

Service item	F.R.T.
THERMOSTAT	0.4
.HOSE D, WATER	
.SENSOR, TEMPERATURE	
.SENDING UNIT, WATER TEMPERATURE	
COVER, THERMOSTAT	0.3
.JOINT, WATER	
.HOSE B, WATER	
CASE COMP., THERMOSTAT	0.5
.HOSE A, WATER	
PIPE, RR. WATER	0.6
.HOSE C, WATER	

Ref. No.	Part No.	Description	Reqd. No. CX500TCc	Serial No.	Area code
1	19300-679-003	THERMOSTAT	1		
2	19315-MC7-000	COVER, THERMOSTAT	1		
3	19411-MC7-000	CASE COMP., THERMOSTAT	1		
4	19421-MC7-000	JOINT, WATER	1		
5	19501-MC7-000	HOSE A, WATER	1		
6	19502-MC7-000	HOSE B, WATER	1		
7	19503-MC7-000	CLAMP., WATER PIPE	2		
8	19504-MC7-000	PIPE, RR. WATER	1		
9	19506-MC7-000	HOSE C, WATER	1		
10	19507-MC7-000	HOSE D, WATER	1		
11	19514-MC7-000	BAND, WATER HOSE	8		
12	19521-MC7-000	TUBE, 5X290	1		
13	36151-MC7-003	SENSOR, TEMPERATURE	1		
14	37750-611-154	SENDING UNIT, WATER TEMPERATURE	1		
15	90017-MC7-000	BOLT, SEALING, 12MM	1		
16	90089-415-000	BOLT, SPECIAL, 5X22	4		
17	90407-259-000	PACKING, DRAIN COCK	1		
18	90454-MC7-000	WASHER, SPECIAL, 12MM	1		
19	91302-657-000	O-RING, 53.8X3.1	1		
20	91303-MC7-003	O-RING, 54.4X3.1	1		
21	91307-611-000	O-RING, 13.5X1.4	1		
22	94608-50000	O-RING, 23X2.8	1		
23	95002-41050-08	CLIP D10.5, TUBE	2		
24	95700-06025-00	BOLT, FLANGE, 6X25	6		

C 8

E-5

Valve • Upper rocker arm

Soupape • Culbuteur supérieur

Ventil • Oberer Kipphebel

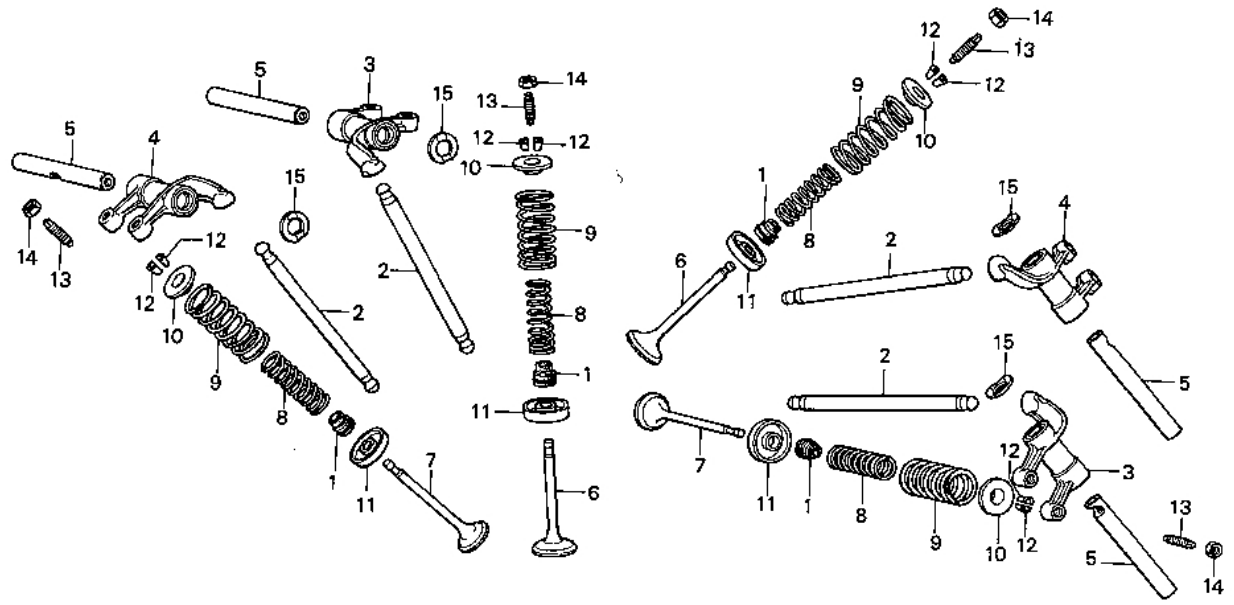

Service item	F.R.T.	Ref. No.	Part No.	Description	Reqd. No. CX500TCc	Serial No.	Area code
ROD COMP., PUSH	0.5	1	12209-300-003	SEAL, VALVE STEM	8		
ARM COMP. A, UPPER ROCKER	0.8	2	14410-415-000	ROD COMP., PUSH	4		
INC. RELATIVE PART		3	14420-MC7-000	ARM COMP. A, UPPER ROCKER	2		
VALVE	3.3	4	14430-MC7-000	ARM COMP. B, UPPER ROCKER	2		
(ADD 0.2 FOR EACH.)		5	14450-415-010	SHAFT COMP., UPPER ROCKER ARM	4		
(INC. REFACING)							
(EXC. VALVE GUIDE REPLACEMENT)		6	14711-415-000	VALVE, IN.	4		
SPRING, VALVE OUTER	3.2	7	14721-MC7-000	VALVE, EX.	4		
INC. RELATIVE PART		8	14751-MC7-003	SPRING, VALVE INNER	8		
(ADD 0.1 FOR EACH.)		9	14761-415-005	SPRING, VALVE OUTER	8		
		10	14771-551-020	RETAINER, VALVE SPRING	8		
		11	14775-300-000	SEAT, VALVE SPRING	8		
		12	14781-551-000	COTTER, VALVE	16		
		13	90012-415-000	SCREW, TAPPET ADJUSTING	8		
		14	90205-300-000	NUT, TAPPET ADJUSTING	8		
		15	90405-415-000	WASHER, WAVE, 1.5MM	4		

C 9

E-6

Camshaft • Lower rocker arm

Arbre à cames • Culbuteur inférieur

Nockenwelle • Unterer Kipphebel

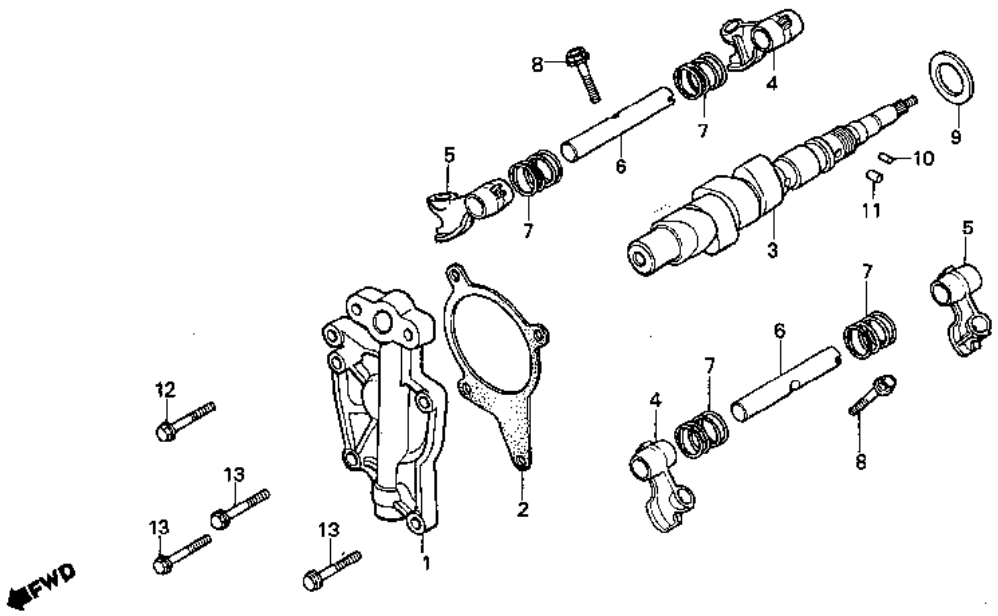

BMC7-10

Service item	F.R.T.
HOLDER, CAMSHAFT	2.6
•GASKET, CAMSHAFT HOLDER	
CAMSHAFT COMP.	*5.5
SHAFT, LOWER ROCKER ARM	6.0
INC. RELATIVE PART	
(ADD 0.5 FOR EACH.)	

Ref. No.	Part No.	Description	Reqd. No. CX500TCc	Serial No.	Area code
1	12221-MC7-000	HOLDER, CAMSHAFT	1		
2	12230-MC7-000	GASKET, CAMSHAFT HOLDER	1		
3	14100-MC7-000	CAMSHAFT COMP.	1		
4	14441-415-010	ARM A, LOWER ROCKER	2		
5	14442-415-010	ARM B, LOWER ROCKER	2		
6	14451-MC7-000	SHAFT, LOWER ROCKER ARM	2		
7	14453-415-000	SPRING A, VALVE ROCKER ARM	4		
8	90008-415-000	BOLT, SPECIAL, 6X30	2		
9	90407-415-000	WASHER, THRUST, 26MM	1		
10	30905-216-000	PIN, CAMSHAFT, 3X5.2	1		
11	91105-415-000	ROLLER, 5X8.5	1		
12	96000-06022-00	BOLT, FLANGE, 6X22	1		
13	96000-06028-00	BOLT, FLANGE, 6X28	3		

C 10

E-7

Clutch cover • Oil filter

Couvercle d'embrayage • Filtre à huile

Kupplungsdeckel • Ölfilter

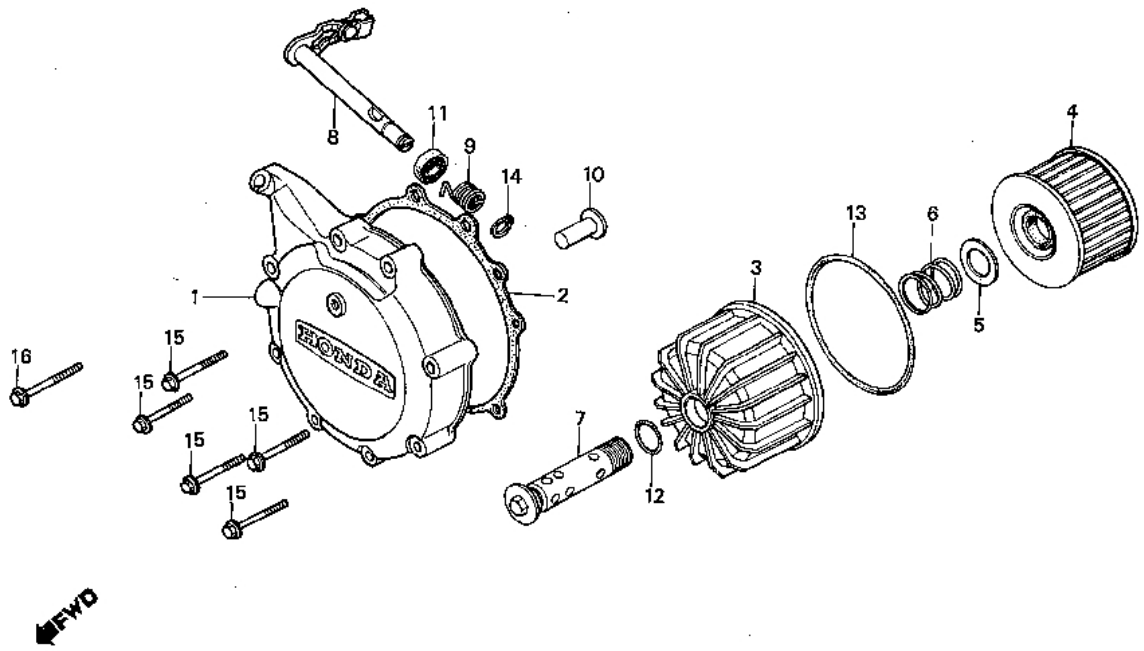

BMC7–11

Service item	F.R.T.	Ref. No.	Part No.	Description	Reqd. No. CX500TCc	Serial No.	Area code
COVER COMP., CLUTCH	0.6	1	11370-MC7-000	COVER COMP., CLUTCH	1		
.SHAFT COMP., CLUTCH LEVER		2	11372-MC7-000	GASKET, CLUTCH COVER	1		
GASKET, CLUTCH COVER	0.5	3	15411-MC7-000	CASE, OIL FILTER	1		
ELEMENT, OIL FILTER	0.2	4	15412-413-005	ELEMENT, OIL FILTER	1		
INC. RELATIVE PART		5	15414-300-000	SEAT, OIL FILTER SPRING	1		
		6	15415-413-000	SPRING, FILTER ELEMENT SETTING	1		
		7	15420-415-000	BOLT COMP., OIL FILTER CENTER	1		
		8	22811-MC7-000	SHAFT COMP., CLUTCH LEVER	1		
		9	22815-413-000	SPRING, CLUTCH LEVER	1		
		10	22847-MC7-000	ROD, CLUTCH LIFTER	1		
		11	91201-706-003	OIL SEAL, 12X18X4	1		
		12	91302-377-000	O-RING, 15X2.5	1		
		13	91311-415-000	O-RING, 81X4.5	1		
		14	94510-10000	CIRCLIP, EXTERNAL, 10	1		
		15	96000-06028-00	BOLT, FLANGE, 6X28	5		
		16	96000-06035-00	BOLT, FLANGE, 6X35	1		

1981.10.20 E C10

C 11

E-8

Transmission cover

Couvercle de transmission

Getriebedeckel

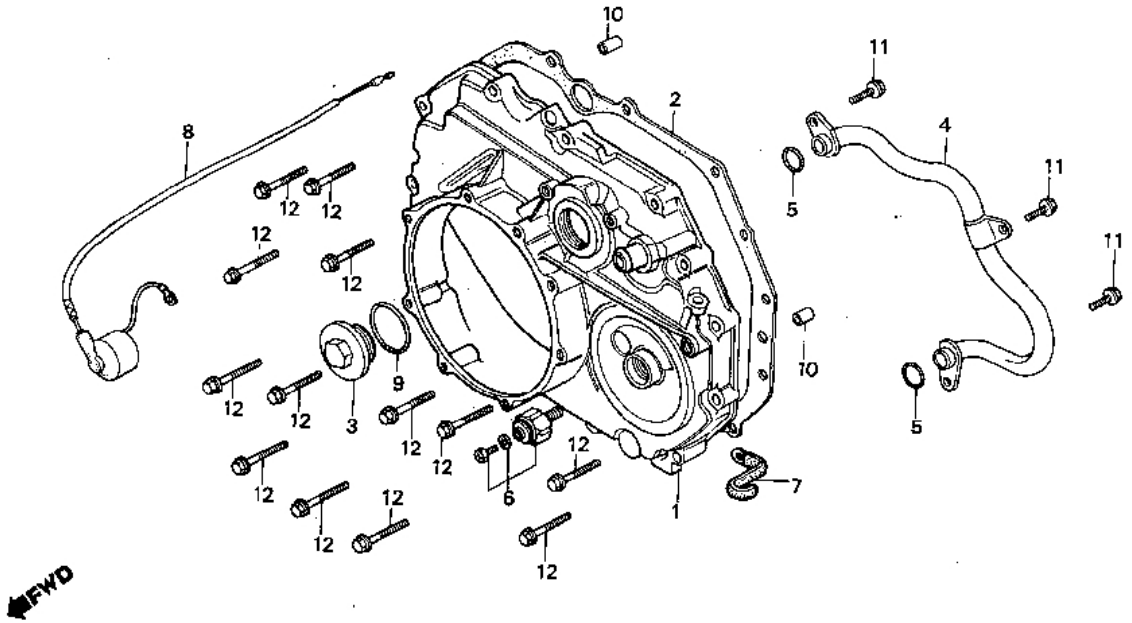

BMC7-12

Service item	F.R.T.
COVER COMP., TRANSMISSION	3.0
GASKET, TRANSMISSION COVER	2.7
PIPE, OIL PASS	2.8
SUB CORD B, ENGINE	0.5
SWITCH ASSY., OIL PRESSURE	0.2

Ref. No.	Part No.	Description	Reqd. No. CX500TCc	Serial No.	Area code
1	11360-MC7-000	COVER COMP., TRANSMISSION	1		
2	11391-449-700	GASKET, TRANSMISSION COVER	1		
3	12363-MC7-000	CAP, A.C. GENERATOR TIMING MARK	1		
4	15142-MC7-000	PIPE, OIL PASS	1		
5	16997-357-003	O-RING, 11.8X2.4	2		
6	32111-MC7-000	CLAMPER, CORD	1		
7	32117-MC7-000	SUB CORD B, ENGINE	1		
8	35500-MB9-004	SWITCH ASSY., OIL PRESSURE	1		
9	91302-001-000	O-RING, 27.5MM	1		
10	94301-08140	PIN A, DOWEL, 8X14	2		
11	95700-06014-00	BOLT, FLANGE, 6X14	3		
12	96000-06028-00	BOLT, FLANGE, 6X28	13		

C 12

E-9

Clutch

Embrayage

Kupplung

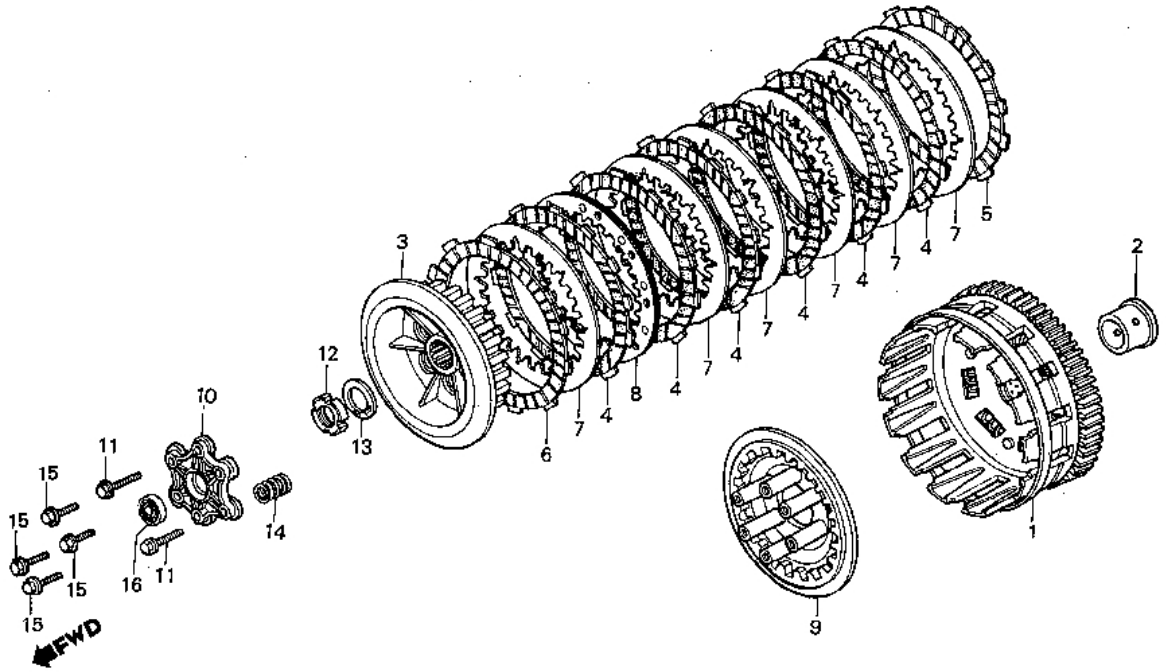

BMC7—13

Service item	F.R.T.	Ref. No.	Part No.	Description	Reqd. No. CX500TCc	Serial No.	Area code
OUTER COMP., CLUTCH	0.8	1	22100-MC7-000	OUTER COMP., CLUTCH	1		
.CENTER COMP., CLUTCH		2	22116-MC7-000	GUIDE, CLUTCH OUTER	1		
.DISK, CLUTCH FRICTION		3	22120-MC7-000	CENTER COMP., CLUTCH	1		
INC. RELATIVE PART		4	22201-MC7-000	DISK, CLUTCH FRICTION	6		
(ONE OR ALL)		5	22201-463-000	DISK A, CLUTCH FRICTION	1		
PLATE, CLUTCH LIFTER	0.6						
.SPRING 14, CLUTCH		6	22202-463-000	DISK B, CLUTCH FRICTION	1		
(ONE OR ALL)		7	22321-463-000	PLATE A, CLUTCH	6		
		8	22322-463-000	PLATE COMP. B, CLUTCH	1		
		9	22350-MC7-000	PLATE, CLUTCH PRESSURE	1		
		10	22360-463-000	PLATE, CLUTCH LIFTER	1		
		11	90008-422-000	BOLT, FLANGE, 6X32	2		
		12	90204-426-000	NUT, LOCK, 20MM	1		
		13	90432-121-000	WASHER, LOCK	1		
		14	95014-75140	SPRING 14, CLUTCH	6		
		15	95720-06025-08	BOLT, FLANGE, 6X25	4		
		16	96100-62030-00	BEARING, RADIAL BALL, 6203	1		

C 13

E-10

Oil pump • Primary drive gear

Pompe à huile •
Pignon commande primaire

Ölpumpe • Primäres Antriebszahnrad

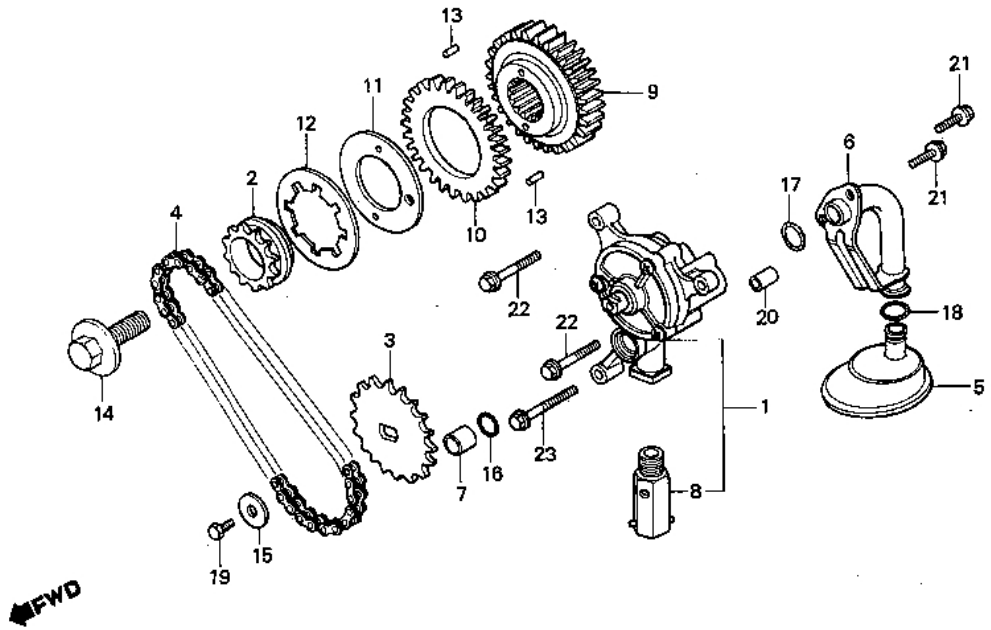

8MC7-14

Service item	F.R.T.
PUMP ASSY., OIL	2.9
.VALVE ASSY., RELIEF	
SPROCKET, OIL PUMP DRIVE	3.0
.GEAR, PRIMARY DRIVE	
.SUB GEAR, PRIMARY	
CHAIN, OIL PUMP	2.8
BODY COMP., OIL STRAINER	0.3

Ref. No.	Part No.	Description	Reqd. No. CX500TCc	Serial No.	Area code
1	15100-MC7-000	PUMP ASSY., OIL	1		
2	15115-MC7-000	SPROCKET, OIL PUMP DRIVE	1		
3	15116-MC7-000	SPROCKET, OIL PUMP DRIVEN	1		
4	15140-MC7-000	CHAIN, OIL PUMP	1		
5	15141-MC7-000	BODY COMP., OIL STRAINER	1		
6	15143-MC7-000	PIPE COMP., OIL STRAINER	1		
7	15155-300-000	COLLAR, O-RING	1		
8	15220-415-000	VALVE ASSY., RELIEF	1		
9	23121-MC7-000	GEAR, PRIMARY DRIVE (36T)	1		
10	23122-MC7-000	SUB GEAR, PRIMARY (35T)	1		
11	23123-415-000	PLATE, SIDE	1		
12	23124-415-003	SPRING, DISK	1		
13	30905-216-000	PIN, CAMSHAFT, 3X5.2	2		
14	90013-MC7-000	BOLT, UBS, 12X28	1		
15	90486-028-000	WASHER, SPARK ADVANCER SETTING	1		
16	91301-268-020	O-RING, 14MM	1		
17	91302-377-000	O-RING, 15X2.5	1		
18	91363-MC7-004	O-RING, 15.3X3.5	1		
19	92000-06008	BOLT, HEX., 6X8	1		
20	94301-08140	PIN A, DOWEL, 8X14	1		
21	95700-06014-00	BOLT, FLANGE, 6X14	2		
22	95700-06025-00	BOLT, FLANGE, 6X25	2		

1981.10.20 E C13

C 14

E-10

Oil pump • Primary drive gear

Pompe à huile •
Pignon commande primaire

Ölpumpe • Primäres Antriebszahnrad

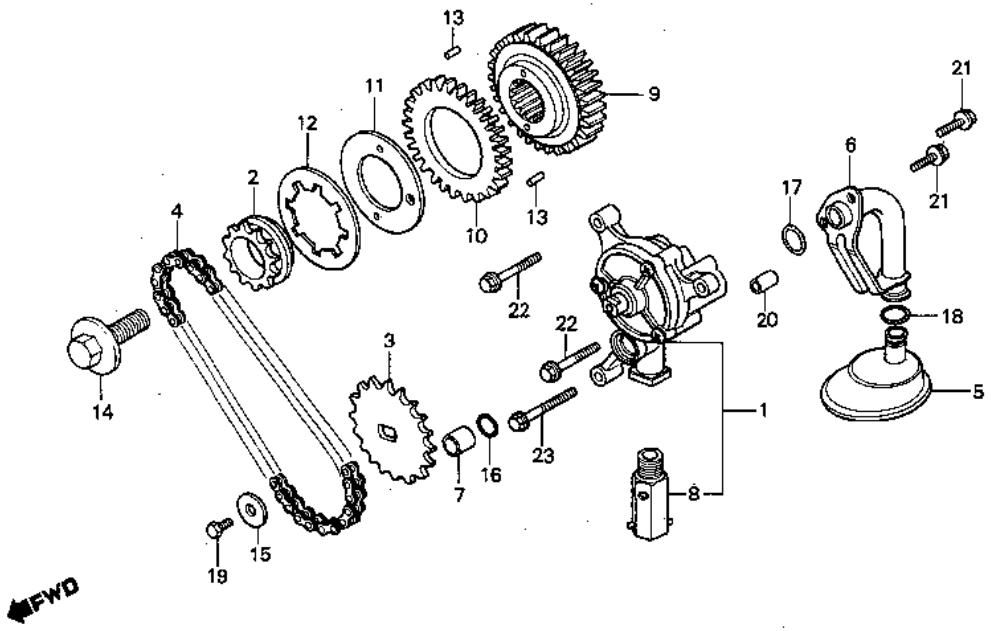

BMC7–14

Service item	F.R.T.	Ref. No.	Part No.	Description	Reqd. No. CX500TCc	Serial No.	Area code
		23	95700-06032-00	BOLT, FLANGE, 6X32	1		

C 15

E-11

Water pump · Pulse generator

Pompe à eau · Generateur d'impulsions

Wasserpumpe · Impulsgeber

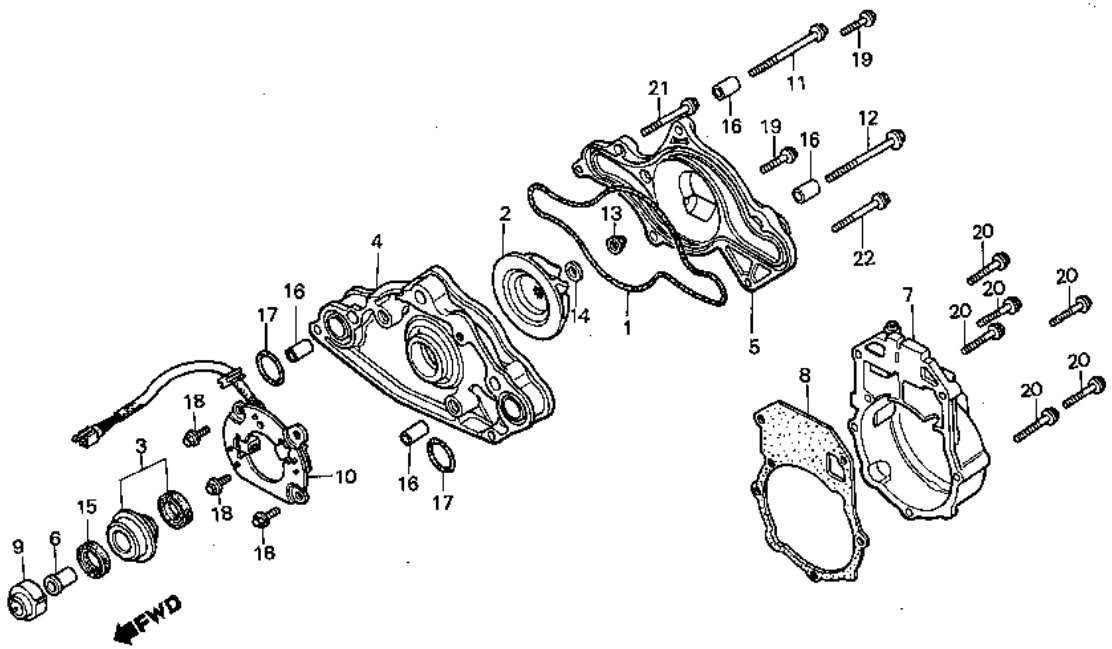

BMC7-15

Service item	F.R.T.	Ref. No.	Part No.	Description	Reqd. No. CX500TCc	Serial No.	Area code
IMPELLER, WATER PUMP	0.8	1	11396-415-000	GASKET, WATER PUMP BASE	1		
SEAL, MECHANICAL	1.4	2	19215-MC7-000	IMPELLER, WATER PUMP	1		
.BODY, WATER PUMP		3	19217-657-023	SEAL, MECHANICAL	1		
.COVER COMP., PULSER		4	19221-MC7-000	BODY, WATER PUMP	1		
.GASKET, PULSER COVER		5	19222-MC7-000	COVER, WATER PUMP	1		
COVER, WATER PUMP	0.7						
ROTOR, CAMSHAFT TIMING	1.2	6	19233-MC7-000	COLLAR, WATER PUMP	1		
GENERATOR ASSY., PULSE	1.3	7	30372-MC7-000	COVER COMP., PULSER	1		
		8	30373-MC7-000	GASKET, PULSER COVER	1		
		9	36141-MC7-003	ROTOR, CAMSHAFT TIMING	1		
		10	36142-MC7-003	GENERATOR ASSY., PULSE	1		
		11	90067-MC7-000	BOLT, FLANGE, 8X95	1		
		12	90069-MC7-000	BOLT, FLANGE, 8X115	1		
		13	90201-415-000	NUT, CAP, 6MM	1		
		14	90441-706-000	WASHER, SEALING, 6MM	1		
		15	91202-283-013	OIL SEAL, 18X28X6	1		
		16	94301-10160	PIN A, DOWEL, 10X16	4		
		17	94608-50000	O-RING, 23X2.8	2		
		18	96000-06014-00	BOLT, FLANGE, 6X14	3		
		19	96000-06022-00	BOLT, FLANGE, 6X22	2		
		20	96000-06025-00	BOLT, FLANGE, 6X25	6		
		21	96000-06060-00	BOLT, FLANGE, 6X60	1		
		22	96000-06080-00	BOLT, FLANGE, 6X80	1		

C 16

E-12

Starting motor

Moteur démarrage

Anlassermotor

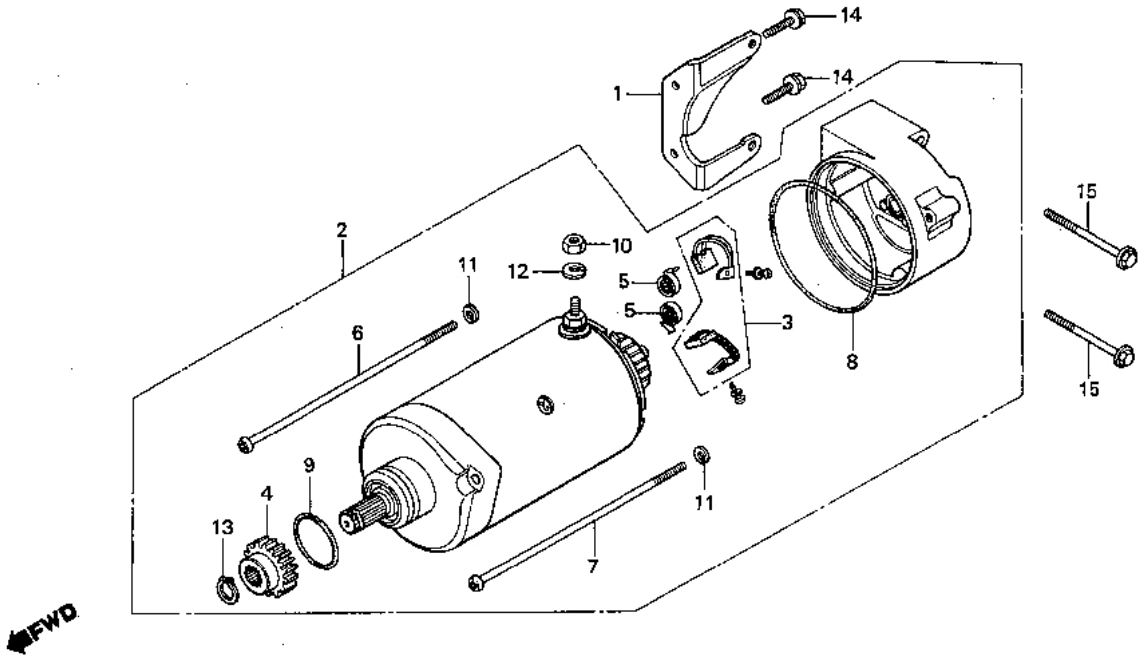

B416-13

Service item	F.R.T.	Ref. No.	Part No.	Description	Reqd. No. CX500TCc	Serial No.	Area code
MOTOR ASSY., STARTING	0.2	1	11312-MC7-000	STAY, STARTER MOTOR	1		
.GEAR, STARTING MOTOR		2	31200-449-008	MOTOR ASSY., STARTING	1		
BRUSH SET, CARBON	0.4	3	31201-292-158	BRUSH SET, CARBON	1		
		4	31201-415-000	GEAR, STARTING MOTOR (27T)	1		
		5	31204-292-158	SPRING, CARBON BRUSH	2		
		6	31205-413-780	BOLT, STARTING MOTOR COVER	1		
		7	31205-449-008	BOLT A, SETTING	1		
		8	31206-415-000	O-RING, 60X1.4	1		
		9	91309-300-000	O-RING, 24.4X3.1	1		
		10	94002-06000	NUT, HEX., 6MM	1		
		11	94111-05000	WASHER, SPRING, 5MM	2		
		12	94111-06000	WASHER, SPRING, 6MM	1		
		13	94510-11000	CIRCLIP, EXTERNAL, 11	1		
		14	96000-06018-00	BOLT, FLANGE, 6X18	2		
		15	96000-06035-00	BOLT, FLANGE, 6X35	2		

D 1

E-13

Rear cover

Couvercle arrière

Hinterdeckel

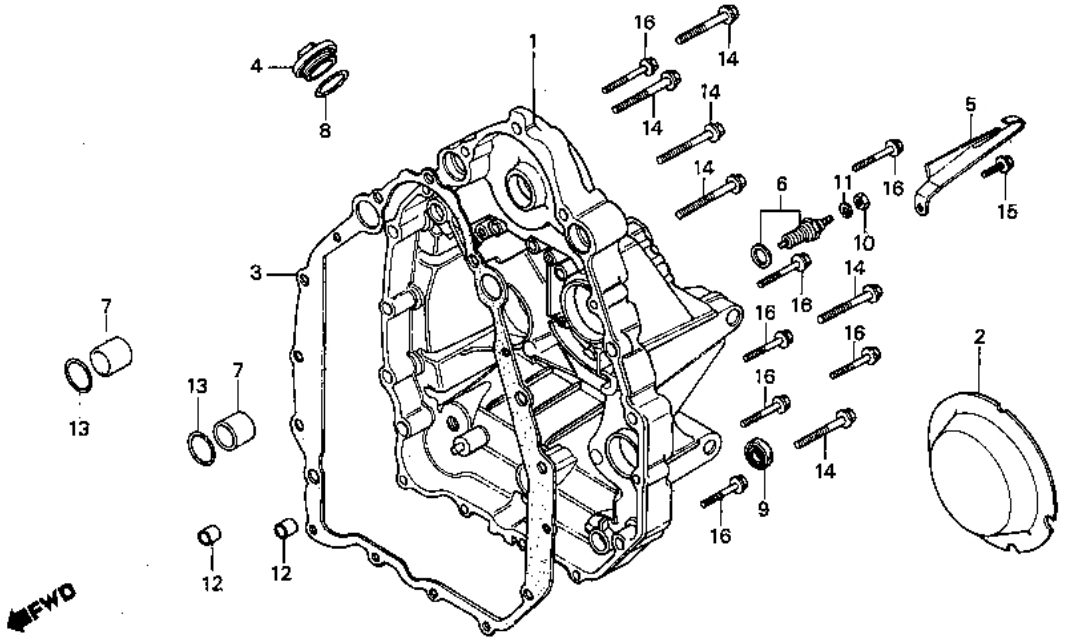

6MC7-4

Service item	F.R.T.
COVER, RR.	*4.5
GASKET, RR. COVER	*4.1
•OIL SEAL, 22X36X7	
SWITCH ASSY., NEUTRAL	0.3

Ref. No.	Part No.	Description	Reqd. No. CX500TCc	Serial No.	Area code
1	11310-MC7-000	COVER, RR.	1		
2	11311-MC7-000	PLATE, BREATHER	1		
3	11394-449-701	GASKET, RR. COVER	1		
4	12363-MC7-000	CAP, A.C. GENERATOR TIMING MARK	1		
5	31140-415-000	GUIDE, NEUTRAL CORD	1		
6	35600-413-003	SWITCH ASSY., NEUTRAL (TOYO)	1		
7	90701-415-000	COLLAR, 22.2MM	2		
8	91202-MC7-000	OIL SEAL, 22X36X7	1		
9	91302-001-000	O-RING, 27.5MM	1		
10	94001-04000-05	NUT, HEX., 4MM	1		
11	94111-04800	WASHER, SPRING, 4MM	1		
12	94301-10160	PIN A, DOWEL, 10X16	2		
13	94608-50000	O-RING, 23X2.8	2		
14	95700-08040-00	BOLT, FLANGE, 8X40	5		
15	96000-06014-00	BOLT, FLANGE, 6X14	1		
16	96000-06032-00	BOLT, FLANGE, 6X32	7		

D 2

E-14

Generator

Générateur

Lichtmaschine

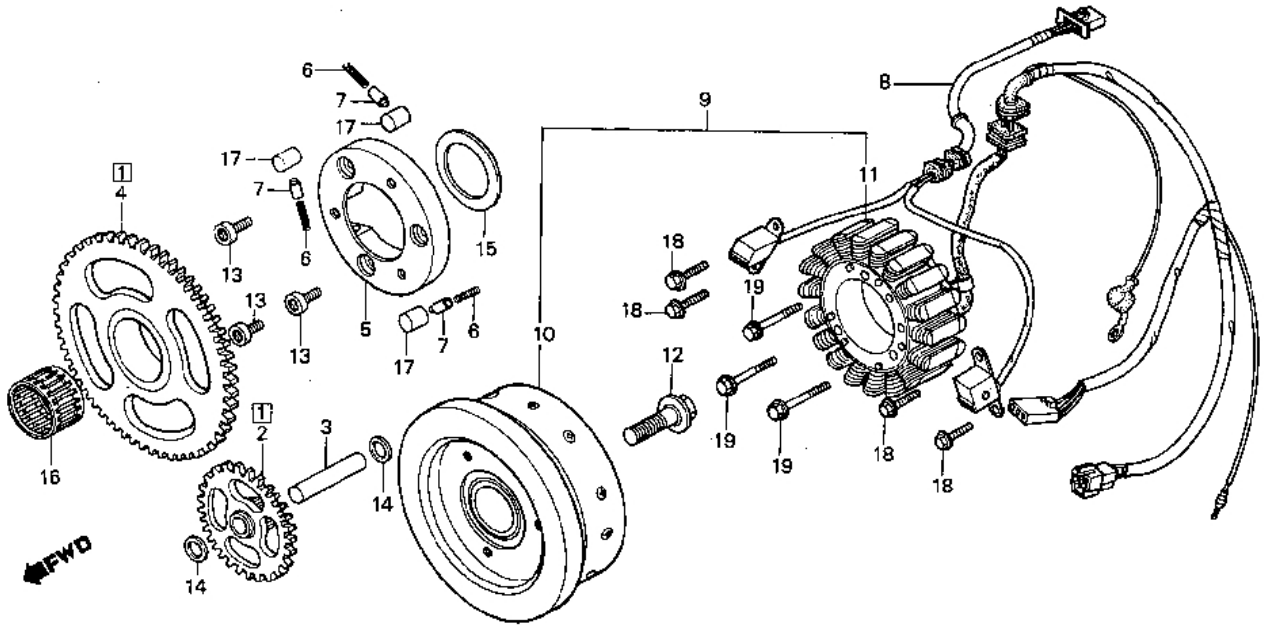

Service item	F.R.T.
GEAR SET, STARTING	*4.7
.GEAR COMP., STARTING DRIVEN	
.ROLLER, 15X13	
INC. RELATIVE PART	
(ONE OR ALL)	
GEAR, STARTER REDUCTION	*4.1
OUTER, STARTING CLUTCH	*4.9
.FLYWHEEL COMP.	
GENERATOR ASSY., FLYWHEEL TYPE A.C.	*5.0
STATOR COMP.	*4.4

Ref. No.	Part No.	Description	Reqd. No. CX500TCc	Serial No.	Area code
1	28100-415-305	GEAR SET, STARTING	1		
2	28102-415-010	GEAR, STARTER REDUCTION	1		
3	28106-415-000	SHAFT, STARTER REDUCTION GEAR	1		
4	28110-415-010	GEAR COMP., STARTING DRIVEN	1		
5	28120-415-000	OUTER, STARTING CLUTCH	1		
6	28125-516-030	SPRING, STARTING CLUTCH ROLLER	3		
7	28126-516-020	CAP, STARTING CLUTCH ROLLER SPRING	3		
8	30300-MC7-005	GENERATOR COMP., PULSE	1		
9	31100-MC7-005	GENERATOR ASSY., FLYWHEEL TYPE A.C. (HITACHI)	1		
10	31110-MC7-005	FLYWHEEL COMP. (HITACHI)	1		
11	31120-MC7-005	STATOR COMP. (HITACHI)	1		
12	90002-415-003	BOLT, A.C. GENERATOR SETTING, 12X30	1		
13	90010-415-000	BOLT, SOCKET, 8MM	3		
14	90451-708-000	WASHER, 12MM	2		
15	90454-415-000	WASHER, THRUST, 37MM	1		
16	91021-415-005	BEARING, NEEDLE, 32MM (TOMUSON)	1		
17	91101-516-000	ROLLER, 15X13	3		
18	95700-06020-00	BOLT, FLANGE, 6X20	4		
19	95700-06040-00	BOLT, FLANGE, 6X40	3		

1981.10.20 E D2

D 3

E-15

Cam chain • Tensioner

Chaîne de cames • Tendeur

Steuerkette • Spanner

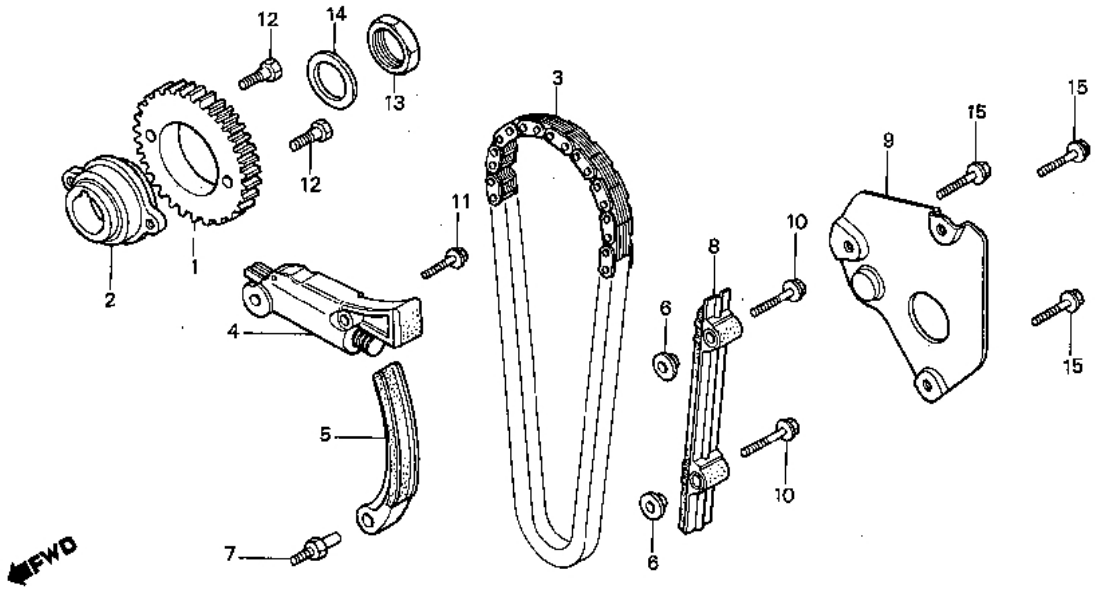

BMC7-

Service item	F.R.T.	Ref. No.	Part No.	Description	Reqd. No. CX500TCc	Serial No.	Area code
SPROCKET, CAM	#4.4	1	14321-415-000	SPROCKET, CAM	1		
BOSS, CAM SPROCKET	#4.5	2	14322-415-000	BOSS, CAM SPROCKET	1		
CHAIN, CAM	#5.0	3	14401-MA1-003	CHAIN, CAM (TSUBAKIMOTO)	1		
TENSIONER COMP., CAM CHAIN	#4.3	4	14500-MC7-000	TENSIONER COMP., CAM CHAIN	1		
TENSIONER, CAM CHAIN	#4.8	5	14511-MC7-000	TENSIONER, CAM CHAIN	1		
.GUIDE, CAM CHAIN							
.PLATE, CAM CHAIN SETTING		6	14515-428-000	COLLAR, 6X14.7	2		
		7	14538-MC7-000	PIN, TENSIONER SETTING	1		
		8	14620-MC7-000	GUIDE, CAM CHAIN	1		
		9	14623-MC7-000	PLATE, CAM CHAIN SETTING	1		
		10	90011-415-000	BOLT, HEX., 6X30	2		
		11	90015-MC7-000	BOLT, FLANGE, 8X32	1		
		12	90081-415-000	BOLT, HEX. KNOCK, 7X17	2		
		13	90207-415-000	NUT, HEX., 20MM	1		
		14	90432-121-000	WASHER, LOCK	1		
		15	95700-06016-00	BOLT, FLANGE, 6X16	3		

D 4

E-16

Final shaft

Arebre final

Endwelle

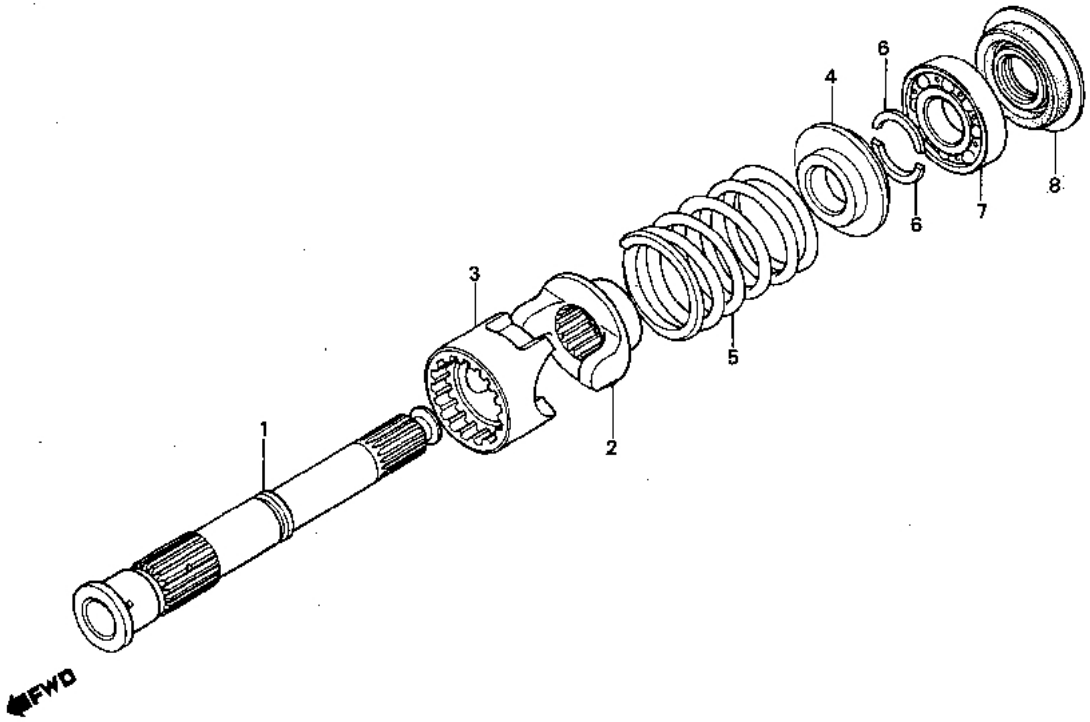

B415-16

Service item	F.R.T.
SHAFT, FINAL	*4.3
INC. RELATIVE PART	
BEARING, BALL, 62/22	*4.2
OIL SEAL, 22X36X7	1.0

Ref. No.	Part No.	Description	Reqd. No. CX500TCc	Serial No.	Area code
1	23521-415-000	SHAFT, FINAL	1		
2	23721-MA1-000	LIFTER, DAMPER	1		
3	23722-MC7-000	CAM, DAMPER	1		
4	23731-371-000	STOPPER, DAMPER SPRING	1		
5	23732-MA1-000	SPRING, DAMPER	1		
6	23733-371-000	WASHER, SPRING STOPPER	2		
7	91005-634-004	BEARING, BALL, 62/22 (KOYO)	1		
	91005-634-008	BEARING, BALL, 62/22 (TOYO)	1		
8	91202-MC7-000	OIL SEAL, 22X36X7	1		

D 5

E-17

Cylinder block

Bloc moteur

Zylinderblock

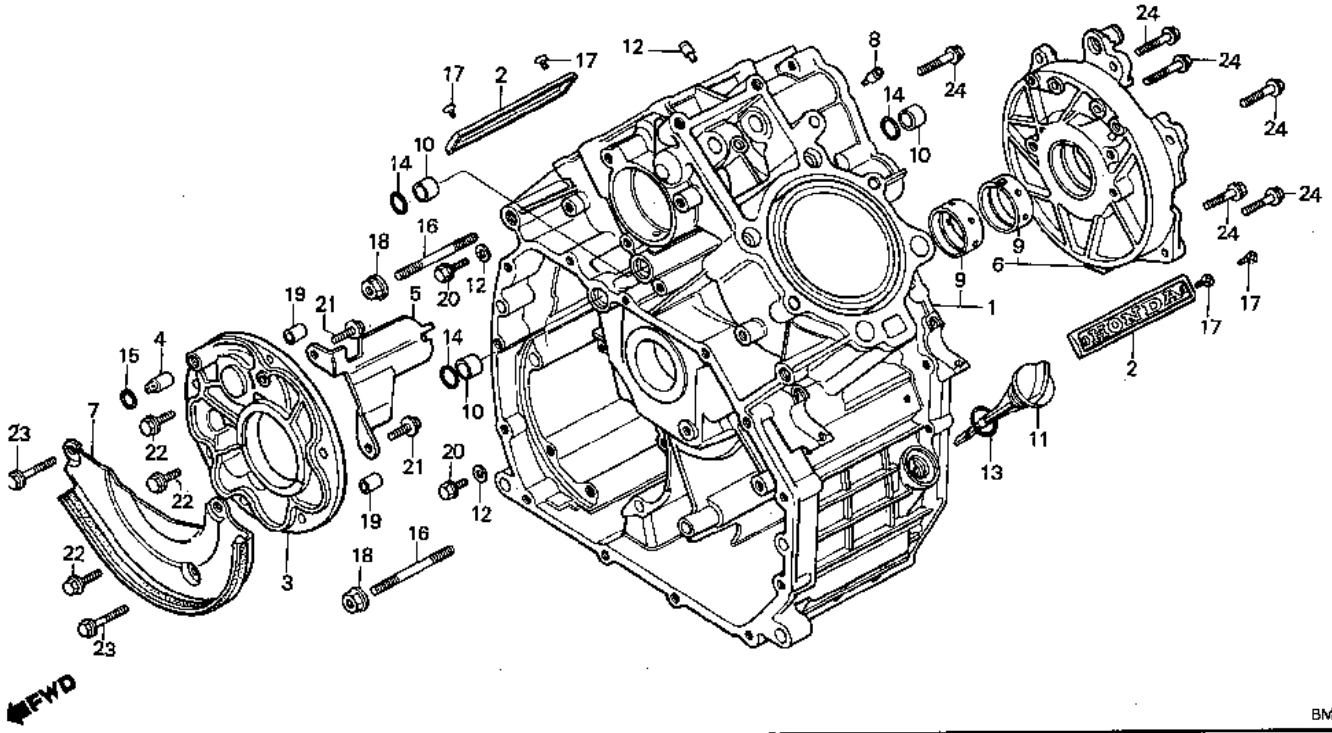

BMC7-16

Service item	F.R.T.	Ref. No.	Part No.	Description	Reqd. No. CX500TCc	Serial No.	Area code
BLOCK COMP., CYLINDER	*7.6	1	11100-MC7-000	BLOCK COMP., CYLINDER	1		
HOLDER, TRANSMISSION	*5.5	2	11105-MC7-000	EMBLEM, CYLINDER BLOCK	2		
CAP COMP., CRANKSHAFT	*7.0	3	11131-MC7-000	HOLDER, TRANSMISSION	1		
.BEARING MAIN		4	11132-MC7-000	ORIFICE, 8MM	1		
(ONE OR ALL)		5	11133-MC7-000	PLATE, TRANSMISSION HOLDER	1		
SEPARATOR COMP., OIL	2.9						
		6	11140-MC7-000	CAP COMP., CRANKSHAFT	1		
		7	11365-MC7-000	SEPARATOR COMP., OIL	1		
		8	12901-413-000	VALVE, OIL CONTROL ORIFICE	2		
		9	13323-MC7-305	BEARING A, MAIN (BLUE)	2		
			13324-MC7-305	BEARING B, MAIN (BLACK)	2		
			13325-MC7-305	BEARING C, MAIN (BROWN)	2		
		10	15155-300-000	COLLAR, O-RING	3		
		11	15650-449-000	GAUGE, OIL LEVEL	1		
		12	90461-357-000	WASHER, SEALING, 12MM	2		
		13	91301-250-000	O-RING, 22X3.0	1		
		14	91301-268-020	O-RING, 14MM	3		
		15	91303-001-000	O-RING, 8MM	1		
		16	92700-10060-0B	BOLT, STUD, 10X60	2		
		17	93902-34110	SCREW, TAPPING, 4X8	4		
		18	94050-10000	NUT, FLANGE, 10MM	2		
		19	94301-08140	PIN A, DOWEL, 8X14	2		
		20	95700-06012-00	BOLT, FLANGE, 6X12	2		
		21	95700-06016-00	BOLT, FLANGE, 6X16	2		
		22	95700-06020-00	BOLT, FLANGE, 6X20	4		
		23	95700-06032-00	BOLT, FLANGE, 6X32	2		
		24	95700-08025-00	BOLT, FLANGE, 8X25	7		

Crankshaft bearing selection

(Oil clearance 30 ~ 60 μm)

Crankshaft O.D. 46φ \ Cylinder block end bearing cap I.D.50φ		0 +0.010	+0.010 +0.020
A	0 −0.010	13325-MC7-305 C (Brown)	13324-MC7-305 B (Black)
B	−0.010 −0.020	13324-MC7-305 B (Black)	13323-MC7-305 A (Blue)

D 6

E-18

Oil pan

Carter inférieur

Ölwanne

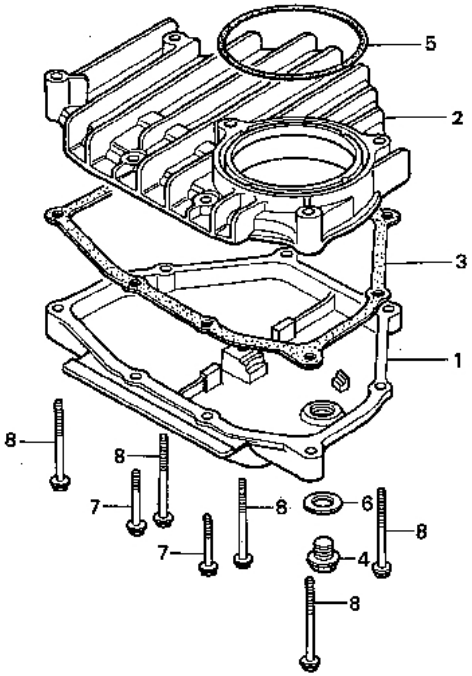

BMC7-17

Service item	F.R.T.	Ref. No.	Part No.	Description	Regd. No. CX500TCc	Serial No.	Area code
PAN, OIL	0.4	1	11121-MC7-000	PAN, OIL	1		
•COVER, OIL PAN		2	11122-MC7-000	COVER, OIL PAN	1		
•GASKET, OIL PAN COVER		3	11128-MC7-000	GASKET, OIL PAN COVER	1		
O-RING, 76.5X3	0.3	4	90081-MC7-000	BOLT, PLUG, 14MM	1		
		5	91362-MC7-004	O-RING, 76.5X3	1		
		6	94109-14000	WASHER, DRAIN PLUG, 14MM	1		
		7	96000-06032-00	BOLT, FLANGE, 6X32	4		
		8	96000-06055-00	BOLT, FLANGE, 6X55	5		

D 7

E-19

Camshaft • Piston

Arbre à cames • Piston

Nockenwelle • Kolben

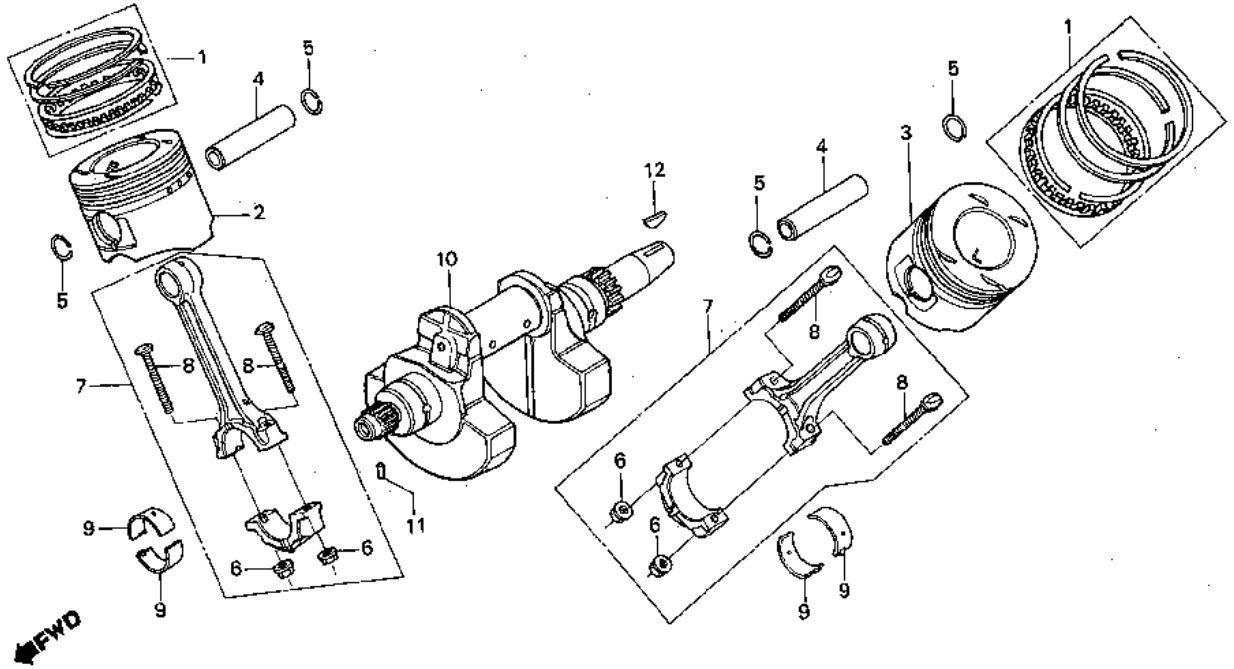

BMC7-3

Service item	F.R.T.	Ref. No.	Part No.	Description	Reqd. No. CX500TCc	Serial No.	Area code
RING SET, PISTON	4.1	1	13011-MC7-004	RING SET, PISTON (STD.)	2		
(L. SIDE *6.4)		2	13101-MC7-003	PISTON, R. (STD.)	1		
•PISTON, R.		3	13102-MC7-003	PISTON, L. (STD.)	1		
PISTON, L.	*6.4	4	13111-MC7-000	PIN, PISTON	2		
PIN, PISTON	4.0	5	13112-MC7-000	CLIP, PISTON PIN, 22MM	4		
(L. SIDE *6.3)							
ROD ASSY., CONNECTING	4.7	6	13205-689-004	NUT, CONNECTING ROD	4		
(L. SIDE *6.7)		7	13210-MC7-000	ROD ASSY., CONNECTING	2		
CRANKSHAFT COMP.	*7.3	8	13213-MC7-004	BOLT, CONROD	4		
		9	13216-MC7-003	BEARING B, CONNECTING ROD (BLACK)	4		
			13217-MC7-003	BEARING C, CONNECTING ROD (BROWN)	4		
			13218-MC7-003	BEARING D, CONNECTING ROD (GREEN)	4		
			13219-MC7-003	BEARING E, CONNECTING ROD (YELLOW)	4		
			13220-MC7-003	BEARING F, CONNECTING ROD (PINK)	4		
		10	13300-MC7-000	CRANKSHAFT COMP.	1		
		11	30905-216-000	PIN, CAMSHAFT, 3X5.2	1		
		12	94401-25180	KEY, WOODRUFF, 25X18	1		

Connecting rod bearing selection

(Oil clearance 28 ~ 52 μm)

Crank pin O.D. 43 φ \ Connecting rod I.D. 46 φ		1	2	3
		0 ~ +0.008	+0.008 ~ +0.016	+0.016 ~ +0.024
A	0.010 ~ 0.018	13220-MC7-003 F (Pink)	13219-MC7-003 E (Yellow)	13218-MC7-003 D (Green)
B	~0.018 ~0.026	13219-MC7-003 Y (Yellow)	13218-MC7-003 D (Green)	13217-MC7-003 C (Brown)
C	~0.026 ~0.034	13218-MC7-003 D (Green)	13217-MC7-003 C (Brown)	13216-MC7-003 B (Black)

D 8

E-20

Transmission

Transmission

Getriebe

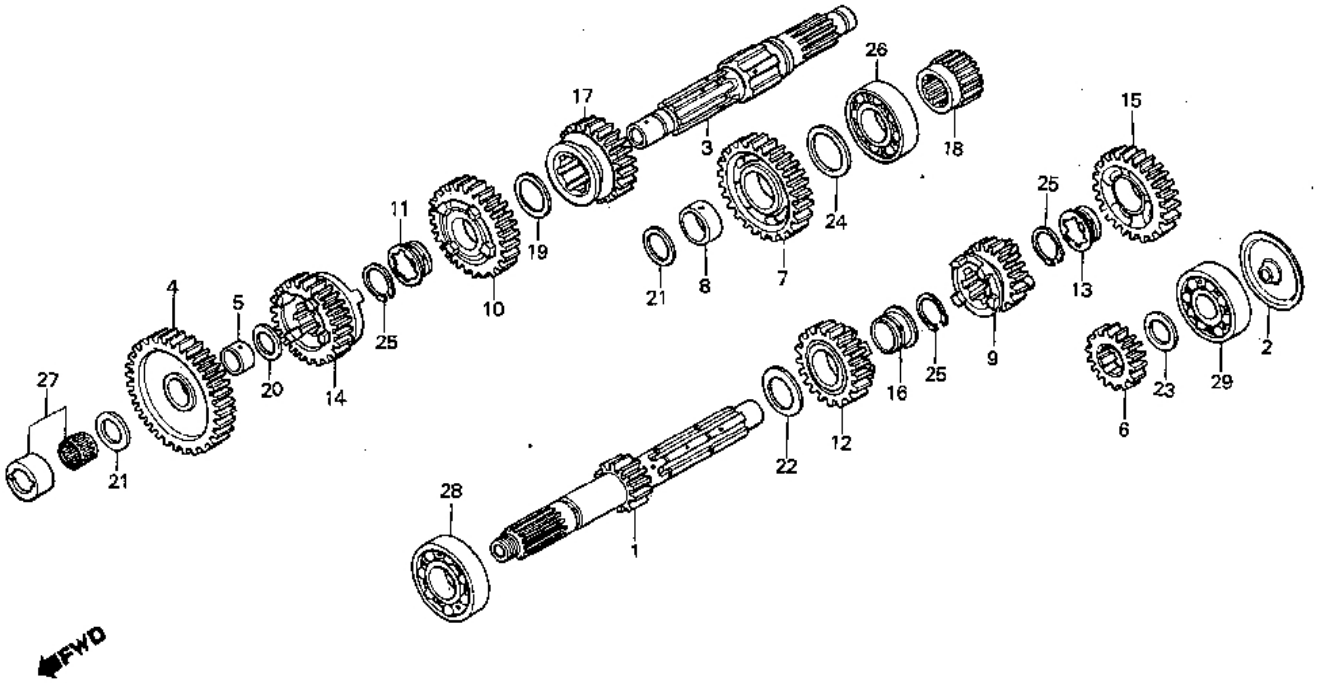

BMC7-5

Service item	F.R.T.	Ref. No.	Part No.	Description	Reqd. No. CX500TCc	Serial No.	Area code
MAINSHAFT COMP., TRANSMISSION INC. RELATIVE PART	*5.7	1	23211-MC7-000	MAINSHAFT COMP., TRANSMISSION (16T)	1		
•COUNTERSHAFT, TRANSMISSION INC. RELATIVE PART (ONE OR ALL)		2	23219-415-000	PLATE, OIL GUIDE	1		
		3	23220-MC7-000	COUNTERSHAFT, TRANSMISSION	1		
		4	23421-MC7-000	GEAR, COUNTERSHAFT FIRST (40T)	1		
		5	23422-MC7-000	BUSH, 20X24X11	1		
		6	23431-MC7-000	GEAR, MAINSHAFT SECOND (21T)	1		
		7	23441-MC7-000	GEAR, COUNTERSHAFT SECOND (36T)	1		
		8	23442-MC7-000	BUSH, 27.5X31X11.5	1		
		9	23451-MC7-000	GEAR, MAINSHAFT THIRD (25T)	1		
		10	23461-MC7-000	GEAR, COUNTERSHAFT THIRD (32T)	1		
		11	23462-MC7-000	BUSH, 25X29X11.5	1		
		12	23471-MC7-000	GEAR, MAINSHAFT FOURTH (28T)	1		
		13	23472-MC7-000	BUSH, SPLINE	1		
		14	23481-MC7-000	GEAR, COUNTERSHAFT FOURTH (28T)	1		
		15	23491-MC7-000	GEAR, MAINSHAFT FIFTH (31T)	1		B,E,ED,F,G,H,IT,SA,SW,U
			23491-MC7-670	GEAR, MAINSHAFT FIFTH (30T)	1		CM
		16	23492-MC7-000	BUSH, 25X29X15	1		
		17	23501-MC7-000	GEAR, COUNTERSHAFT FIFTH (26T)	1		

D 9

E-20

Transmission

Transmission

Getriebe

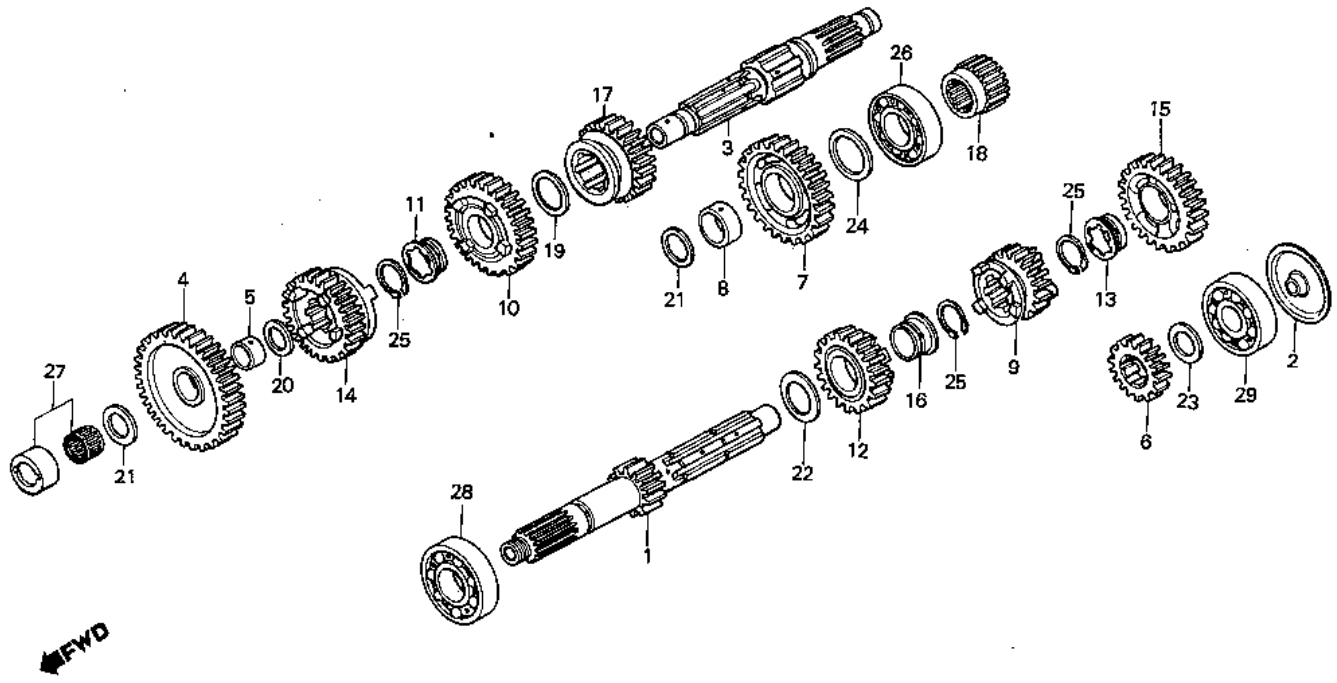

BMC7-5

Service item	F.R.T.	Ref. No.	Part No.	Description	Reqd. No. CX500TCc	Serial No.	Area code
		18	23522-415-000	COLLAR, COUNTERSHAFT	1		
		19	90446-430-000	WASHER, THRUST, 25.2X34	1		
		20	90454-428-000	WASHER, THRUST, 20MM	2		
		21	90455-MC7-000	WASHER, THRUST, 27.5MM	1		
		22	90459-357-000	WASHER C, THRUST, 25MM	1		
		23	90461-MC7-000	WASHER A, THRUST, 20MM	1		
			90462-MC7-000	WASHER B, THRUST, 20MM	1		
			90463-MC7-000	WASHER C, THRUST, 20MM	1		
			90464-MC7-000	WASHER D, THRUST, 20MM	1		
			90465-MC7-000	WASHER E, THRUST, 20MM	1		
		24	90466-MC7-000	WASHER A, THRUST, 25MM	1		
			90467-MC7-000	WASHER B, THRUST, 25MM	1		
			90468-MC7-000	WASHER C, THRUST, 25MM	1		
			90469-MC7-000	WASHER D, THRUST, 25MM	1		
			90471-MC7-000	WASHER E, THRUST, 25MM	1		
		25	90601-300-000	CIRCLIP, 25MM	3		
		26	91010-MC7-003	BEARING, SPECIAL BALL, 6205	1		
		27	91022-415-008	BEARING, NEEDLE, 20MM	1		
		28	96100-63051-00	BEARING, RADIAL BALL, 6305	1		
		29	96140-62040-00	BEARING, RADIAL BALL, 6204U	1		

D 10

E-21

Shift drum • Shift fork

Tambour de changement de vitesse • Fourchette de changement

Schaltwalze • Schaltgabel

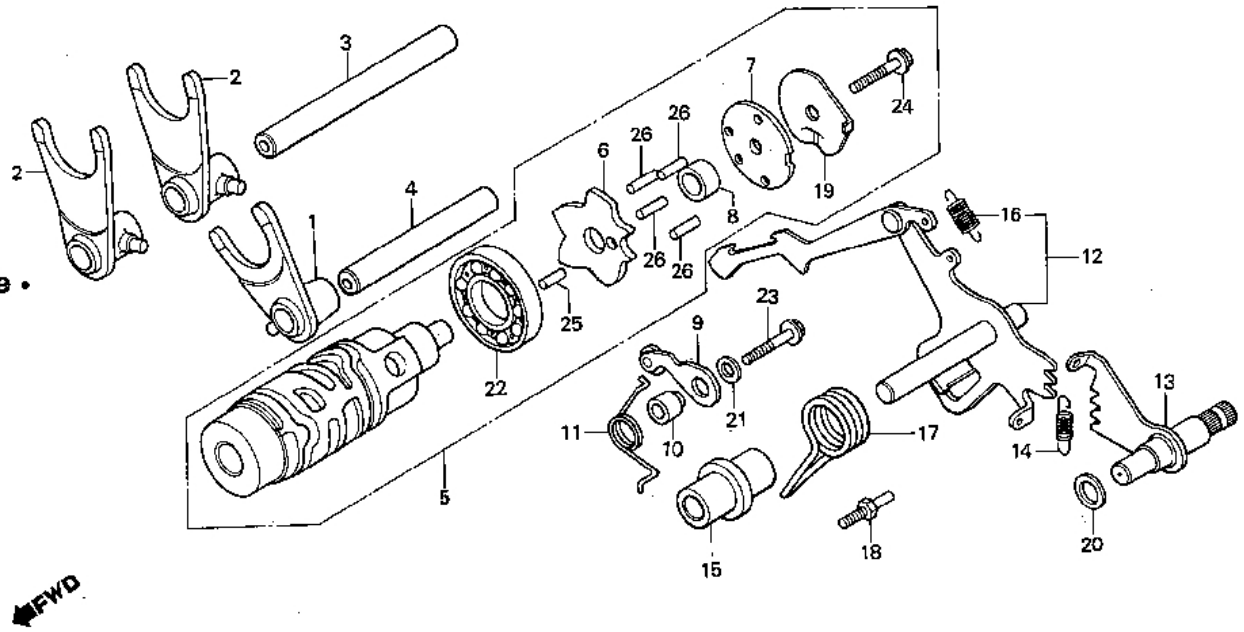

Service item	F.R.T.	Ref. No.	Part No.	Description	Reqd. No. CX500TCc	Serial No.	Area code
FORK, MAINSHAFT	*5.4	1	24216-MC7-000	FORK, MAINSHAFT THIRD GEARSHIFT	1		
INC. RELATIVE PART							
.DRUM COMP., GEARSHIFT		2	24221-MC7-000	FORK, COUNTERSHAFT FIFTH GEARSHIFT	2		
PLATE, DRUM CAM	*4.2						
INC. RELATIVE PART		3	24241-MC7-000	SHAFT A, GEARSHIFT FORK GUIDE	1		
.STOPPER COMP., GEARSHIFT DRUM		4	24242-MC7-000	SHAFT B, GEARSHIFT FORK GUIDE	1		
.ARM COMP., GEARSHIFT		5	24300-MC7-000	DRUM COMP., GEARSHIFT	1		
.SPINDLE COMP., GEARSHIFT							
		6	24303-MC7-000	PLATE, DRUM CAM	1		
		7	24304-415-000	PLATE, DRUM CENTER	1		
		8	24305-415-000	COLLAR, DRUM CENTER	1		
		9	24430-413-000	STOPPER COMP., GEARSHIFT DRUM	1		
		10	24432-413-000	COLLAR, GEARSHIFT DRUM STOPPER	1		
		11	24435-415-000	SPRING, DRUM STOPPER	1		
		12	24610-415-000	ARM COMP., GEARSHIFT	1		
		13	24620-MC7-000	SPINDLE COMP., GEARSHIFT	1		
		14	24623-415-000	SPRING, GEARSHIFT	1		
		15	24624-415-000	COLLAR, GEARSHIFT ARM	1		
		16	24641-216-000	SPRING, GEARSHIFT ARM	1		
		17	24651-333-000	SPRING, GEARSHIFT RETURN	1		

D 11

E-21

Shift drum • Shift fork

Tambour de changement de vitesse • Fourchette de changement

Schaltwalze • Schaltgebel

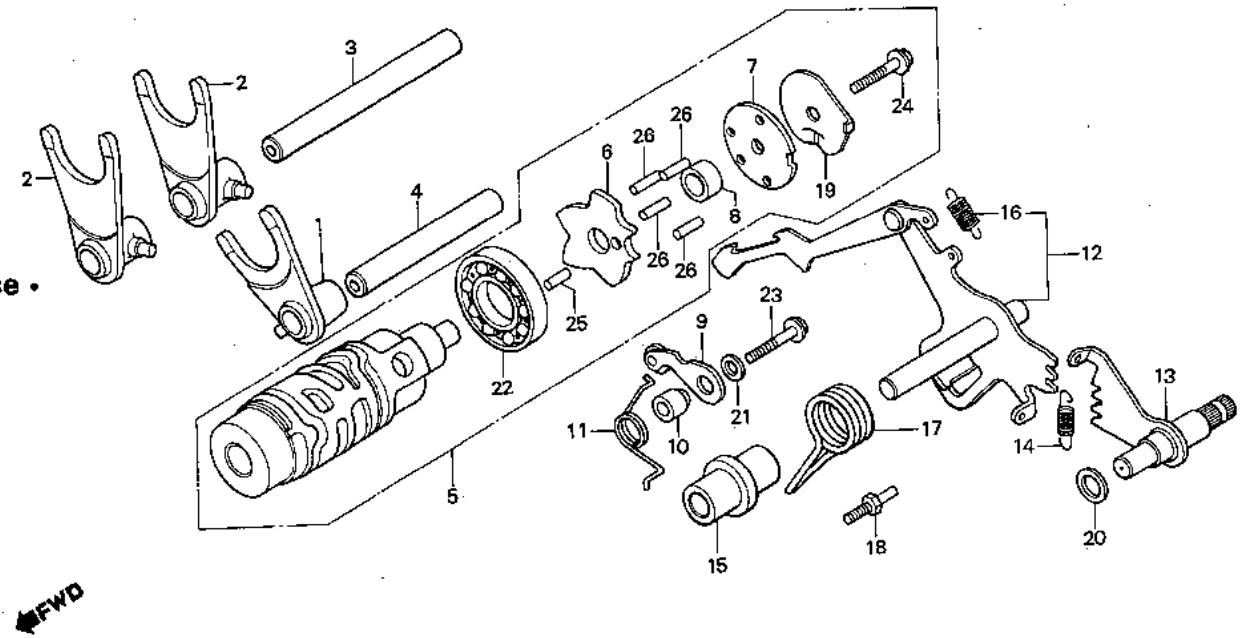

Service item	F.R.T.	Ref. No.	Part No.	Description	Reqd. No. CX500TCc	Serial No.	Area code
		18	24652-259-000	PIN, SHIFT RETURN SPRING	1		
		19	35753-415-000	PLATE, POINT	1		
		20	90451-708-000	WASHER, 12MM	1		
		21	90486-028-000	WASHER, SPARK ADVANCER SETTING	1		
		22	91008-374-003	BEARING, BALL, 16005 (TOYO)	1		
		23	95700-06025-00	BOLT, FLANGE, 6X25	1		
		24	95725-06025-00	BOLT, FLANGE, 6X25	1		
		25	96220-40118	ROLLER, 4X11.8	1		
		26	96220-40140	ROLLER, 4X14	4		

1981.10.20 E D11

D 12

E-22

Turbo pump

Pompe à turbo

Turbopumpe

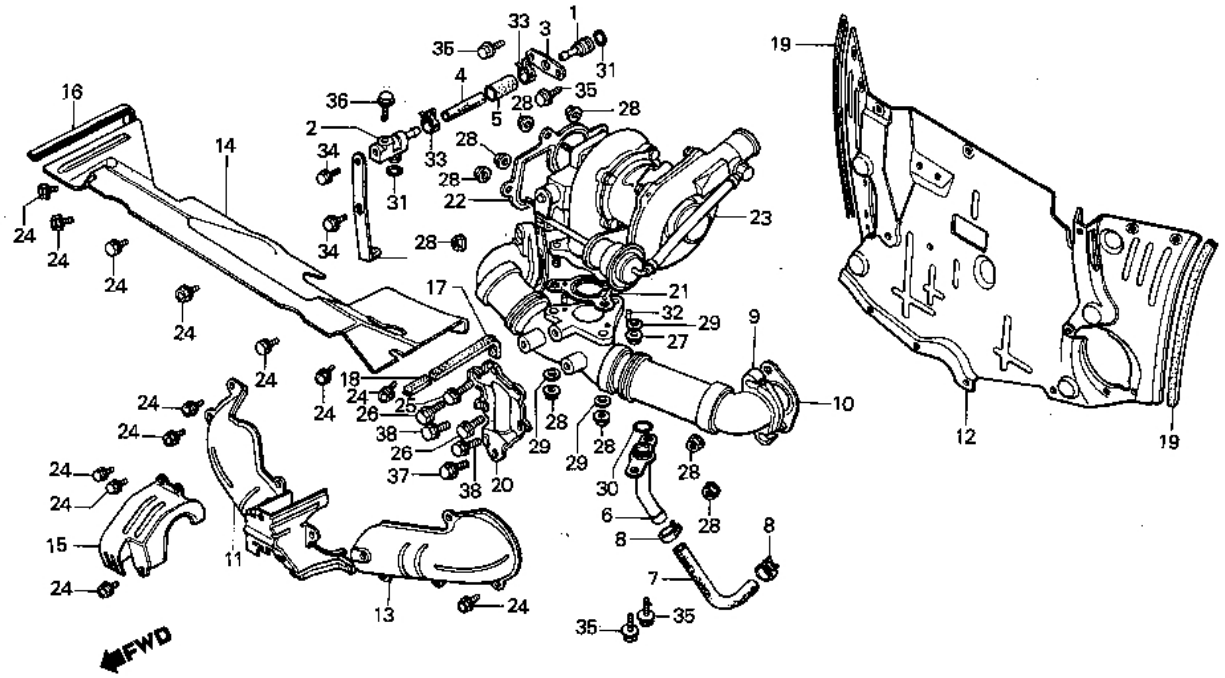

BMC7-18

Service item	F.R.T.	Ref. No.	Part No.	Description	Reqd. No. CX500TCc	Serial No.	Area code
HOLDER COMP. A, TURBOCHARGER OIL HOSE	1.3	1	15531-MC7-000	HOLDER COMP. A, TURBOCHARGER OIL HOSE	1		
.HOSE, TURBOCHARGER OIL		2	15533-MC7-000	HOLDER COMP. B, TURBOCHARGER OIL HOSE	1		
.COVER, EX. MANIFOLD FR.							
.COVER, L. EX. MANIFOLD FR.		3	15534-MC7-000	PLATE, SET	1		
.COVER, ENGINE UPPER		4	15538-MC7-000	HOSE, TURBOCHARGER OIL	1		
HOLDER COMP. B, TURBOCHARGER OIL HOSE	1.2	5	15539-MC7-000	PROTECTOR, TURBOCHARGER OIL HOSE	1		
.COVER, TURBOCHARGER							
JOINT COMP. A, OIL RETURN	0.4	6	15570-MC7-000	JOINT COMP. A, OIL RETURN	1		
HOSE, OIL RETURN	0.3	7	15573-MC7-000	HOSE, OIL RETURN	1		
MANIFOLD COMP., EX.	1.9	8	15576-MC7-000	CLAMP, OIL RETURN TUBE	2		
COVER, EX. MANIFOLD RR.	2.2	9	18100-MC7-000	MANIFOLD COMP., EX.	1		
PUMP ASSY., TURBO	2.5	10	18139-MC7-000	GASKET, EX. MANIFOLD	2		
		11	18141-MC7-000	COVER, EX. MANIFOLD FR.	1		
		12	18142-MC7-000	COVER, EX. MANIFOLD RR.	1		
		13	18143-MC7-000	COVER, L. EX. MANIFOLD FR.	1		
		14	18144-MC7-000	COVER, ENGINE UPPER	1		
		15	18145-MC7-000	COVER, TURBOCHARGER	1		
		16	18146-MC7-300	RUBBER A, EX. MANIFOLD COVER SEAL	1		

D 13

E-22

Turbo pump

Pompe à turbo

Turbopumpe

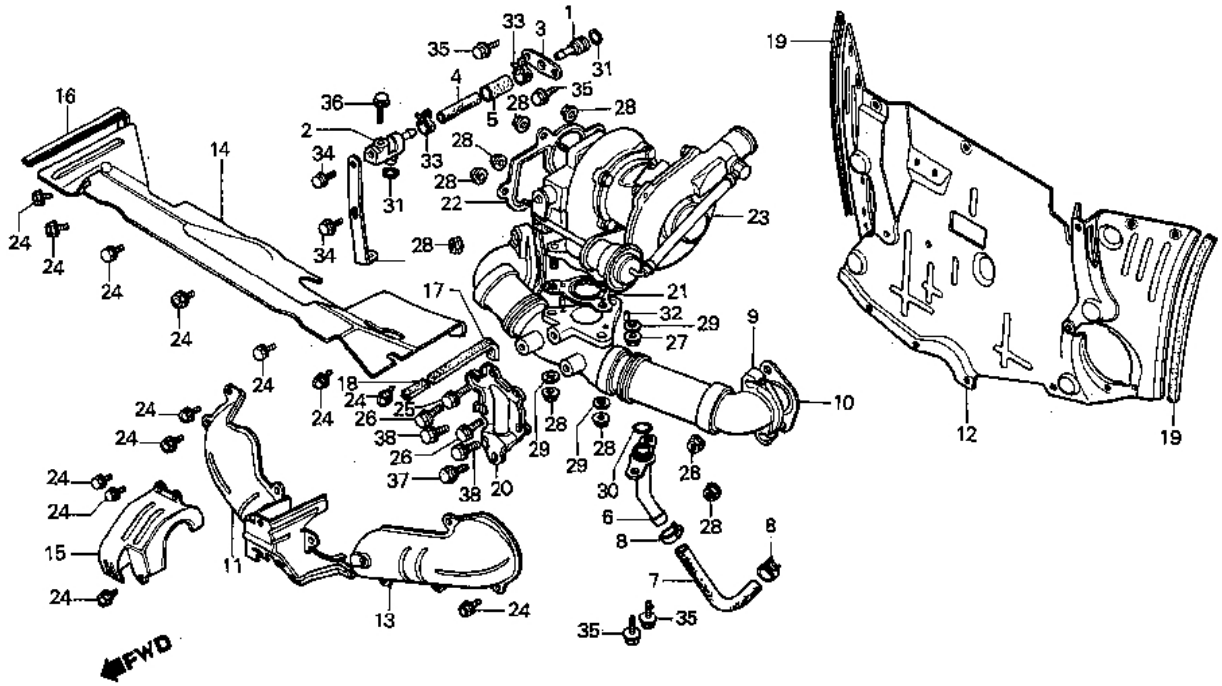

BMC7-18

Service item	F.R.T.	Ref. No.	Part No.	Description	Reqd. No. CX500TCc	Serial No.	Area code
		17	18147-MC7-300	RUBBER B, EX. MANIFOLD COVER SEAL	1		
		18	18148-MC7-300	RUBBER C, EX. MANIFOLD COVER SEAL	1		
		19	18149-MC7-300	RUBBER D, EX. MANIFOLD COVER SEAL	2		
		20	18151-MC7-000	PLATE, SETTING	1		
		21	18191-MC7-000	GASKET, TURBOCHARGER	1		
		22	18192-MC7-000	GASKET, EX. PIPE JOINT	1		
		23	18200-MC7-003	PUMP ASSY., TURBO	1		
		24	90002-MC7-000	BOLT, FLANGE, 5X8	16		
		25	90063-MC7-003	BOLT, SPECIAL, 8X26	1		
		26	90064-MC7-003	BOLT, SPECIAL, 8X15	2		
		27	90217-MC7-000	NUT, SPECIAL, 8MM	1		
		28	90217-657-000	NUT, SPECIAL, 8MM	10		
		29	90406-MC7-003	WASHER, SPRING, 8MM	3		
		30	91301-MC7-003	O-RING, 15.8X2.5	1		
			91301-MC7-004	O-RING, 15.8X2.5	1		
		31	91304-MC7-003	O-RING B, 6.8X1.9	2		
		32	94303-04065	PIN C, DOWEL, 4X6.5	2		
		33	95002-40800-08	CLAMP D8, TUBE	2		
		34	95700-06010-00	BOLT, FLANGE, 6X10	2		
		35	95700-06016-00	BOLT, FLANGE, 6X16	4		
		36	95700-06022-00	BOLT, FLANGE, 6X22	1		

D 14

E-22

Turbo pump

Pompe à turbo

Turbopumpe

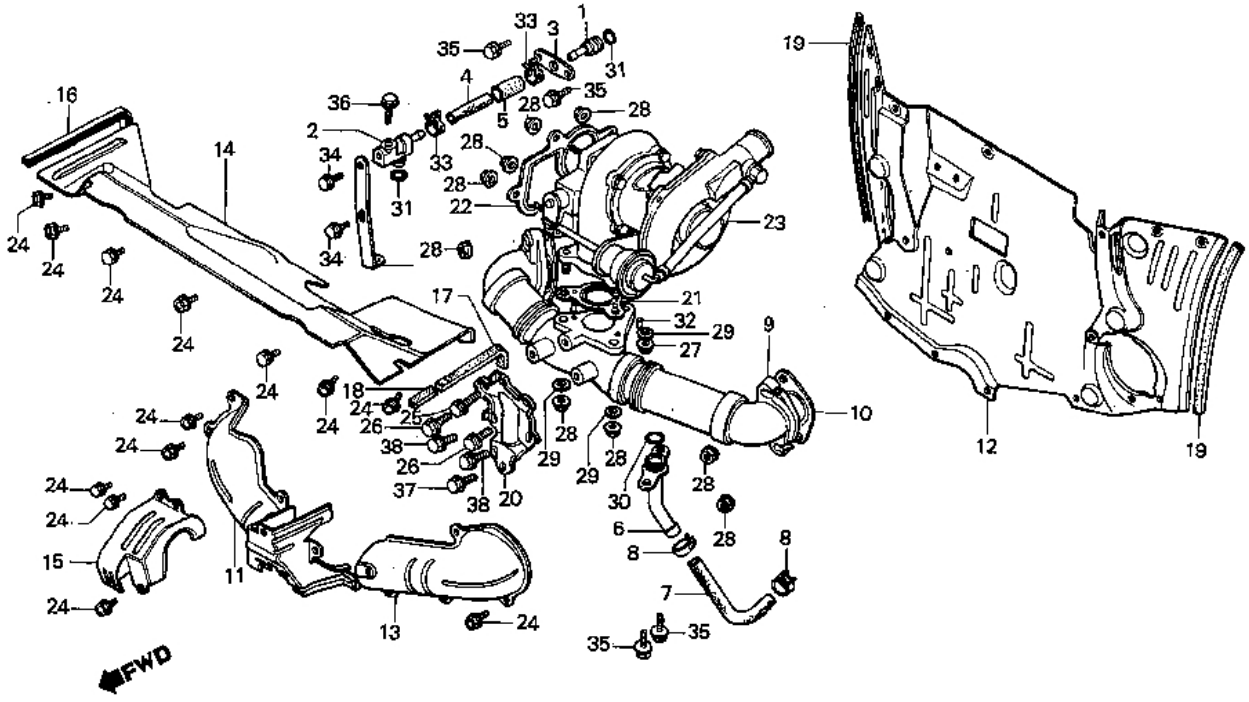

BMC7–18

Service item	F.R.T.	Ref. No.	Part No.	Description	Reqd. No. CX500TCc	Serial No.	Area code
		37	95700-08018-00	BOLT, FLANGE, 8X18	1		
		38	95700-08045-00	BOLT, FLANGE, 8X45	2		

D 15

E-23

Throttle body · Intake manifold

Corps de papillon · Collecteur d'admission

Drosselkörper · Einlasskrümmer

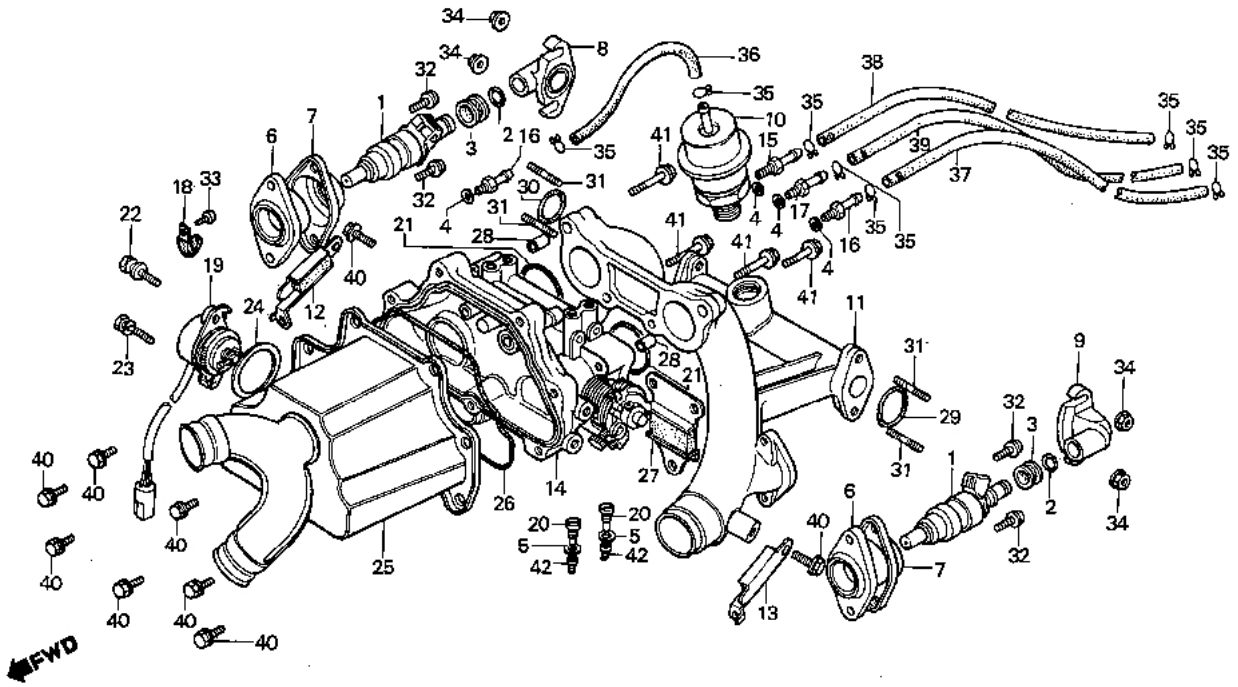

8MC7-19

Service item	F.R.T.
INJECTOR ASSY., FUEL	0.3
CAP, INJECTOR	0.2
REGULATOR ASSY., FUEL PRESSURE	0.4
MANIFOLD COMP., IN.	1.3
BODY, THROTTLE	*4.0
PRE CHAMBER COMP.	*3.8

Ref. No.	Part No.	Description	Reqd. No. CX500TCc	Serial No.	Area code
1	16110-MC7-003	INJECTOR ASSY., FUEL	2		
2	16111-MC7-000	O-RING, INJECTOR	2		
3	16112-MC7-003	GROMMET	2		
4	16170-300-004	WASHER, PLAIN	4		
5	16189-056-004	O-RING, 4.47X1.78	4		
6	16220-MC7-003	FLANGE COMP., HOLDER	2		
7	16221-MC7-000	COVER, HOLDER	2		
8	16312-MC7-000	CAP, R. INJECTOR	1		
9	16313-MC7-000	CAP, L. INJECTOR	1		
10	16850-MC7-003	REGULATOR ASSY., FUEL PRESSURE	1		
11	17110-MC7-000	MANIFOLD COMP., IN.	1		
12	17123-MC7-000	MOUNT, R. IN. SETTING	1		
13	17124-MC7-000	MOUNT, L. IN. SETTING	1		
14	17130-MC7-003	BODY, THROTTLE	1		
15	17131-MC7-003	JOINT, PIG SENSOR	1		
16	17132-MC7-003	JOINT, PB SENSOR	2		
17	17133-MC7-003	JOINT, P2 SENSOR	1		
18	17134-MC7-003	CLIP, THROTTLE SENSOR	1		
19	17135-MC7-003	SENSOR, THROTTLE	1		

D 16

E-23

Throttle body • Intake manifold

Corps de papillon • Collecteur d'admission

Drosselkörper • Einlasskrümmer

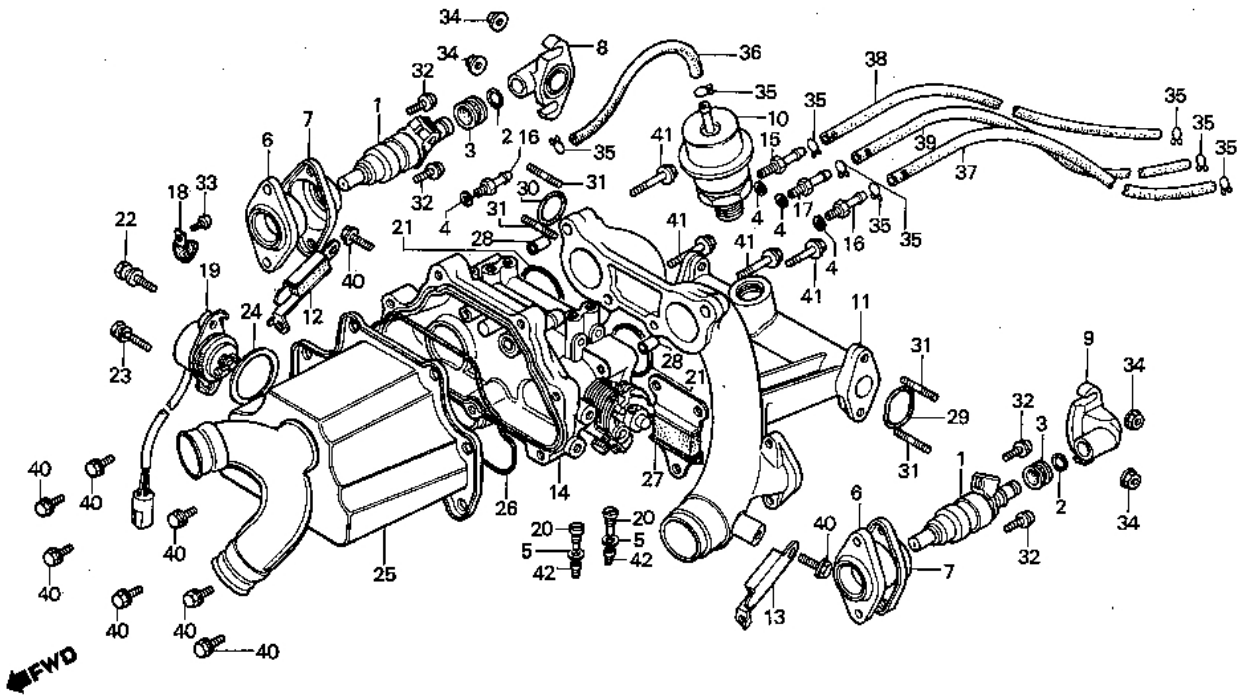

BMC7-19

Service item	F.R.T.	Ref. No.	Part No.	Description	Reqd. No. CX500TCc	Serial No.	Area code
		20	17145-MC7-003	SCREW, PLUG	4		
		21	17146-MC7-003	O-RING, 38.8X2.4	2		
		* 22	17147-MC7-003	BOLT, 6X16	1		
		23	17148-MC7-003	BOLT-WASHER, 6X16	1		
		24	17149-MC7-003	PACKING, SENSER	1		
		25	17150-MC7-000	PRE CHAMBER COMP.	1		
		26	17152-MC7-003	O-RING, CHAMBER	1		
		27	17161-MC7-000	RUBBER, CHAMBER MOUNT	1		
		28	91103-429-000	PIN, DOWEL, 8X10	2		
		29	91256-MC7-004	O-RING, SPECIAL	1		
		30	91256-166-003	O-RING, 16.8X2.4	1		
		31	92700-06028-0B	BOLT, STUD, 6X28	4		
		32	93500-05018-0A	SCREW, PAN, 5X18	4		
		33	93892-05012-08	SCREW-WASHER, 5X12	1		
		34	94050-06080	NUT, FLANGE, 6MM	4		
		35	95002-02070	CLIP B7, TUBE	8		
		36	95005-35085-20	TUBE, 3.5X85	1		
		37	95005-35380-13	TUBE, 3.5X380	1		
		38	95005-35540-14	TUBE, 3.5X540	1		
		39	95005-35550-12	TUBE, 3.5X550	1		
		40	96000-06014-00	BOLT, FLANGE, 6X14	11		
		41	96000-06035-00	BOLT, FLANGE, 6X35	4		
		42	99101-116-0700	JET, MAIN, #70	4		

1981.10.20 E D16

E 1

E-24

Air valve • Reed valve

Soupape d'air • Soupape d'anche

Luftventil • Plättchenventil

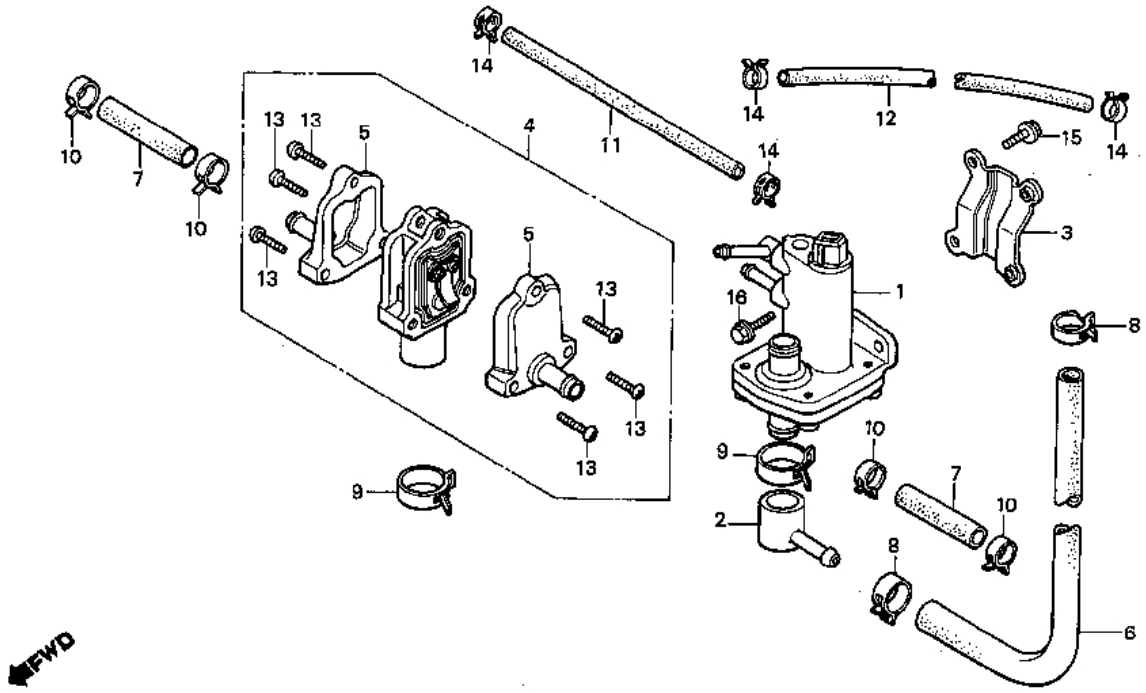

Service item	F.R.T.
VALVE, AIR	0.5
VALVE ASSY., REED	0.4
HOSE, 10X280	0.3
HOSE, 7.5X46	

Ref. No.	Part No.	Description	Reqd. No. CX500TCc	Serial No.	Area code
1	17810-MC7-003	VALVE, AIR	1		
2	17812-MC7-000	JOINT, L. AIR VALVE	1		
3	17819-MC7-000	STAY COMP., AIR VALVE	1		
4	17820-MC7-003	VALVE ASSY., REED	1		
5	17822-MC7-003	COVER, REED VALVE	2		
6	17831-MC7-000	HOSE, 10X280	1		
7	17832-MC7-000	HOSE, 7.5X46	2		
8	17834-MC7-000	CLAMP, BYPASS AIR LINE TUBE	2		
9	17835-MC7-000	CLAMP, AIR VALVE TUBE	2		
10	17836-MC7-000	CLAMP, REED VALVE TUBE	4		
11	19521-MC7-000	TUBE, 5X290	1		
12	19522-MC7-000	TUBE, 5X140	1		
13	93500-04014-0A	SCREW, PAN, 4X14	6		
14	95002-41050-08	CLIP D10.5, TUBE	4		
15	96000-06014-00	BOLT, FLANGE, 6X14	1		
16	96000-06016-00	BOLT, FLANGE, 6X16	1		

F 2

F-1

Radiator · Cooling fan

Radiateur · Ventilateur

Kühler · Kühlgebläse

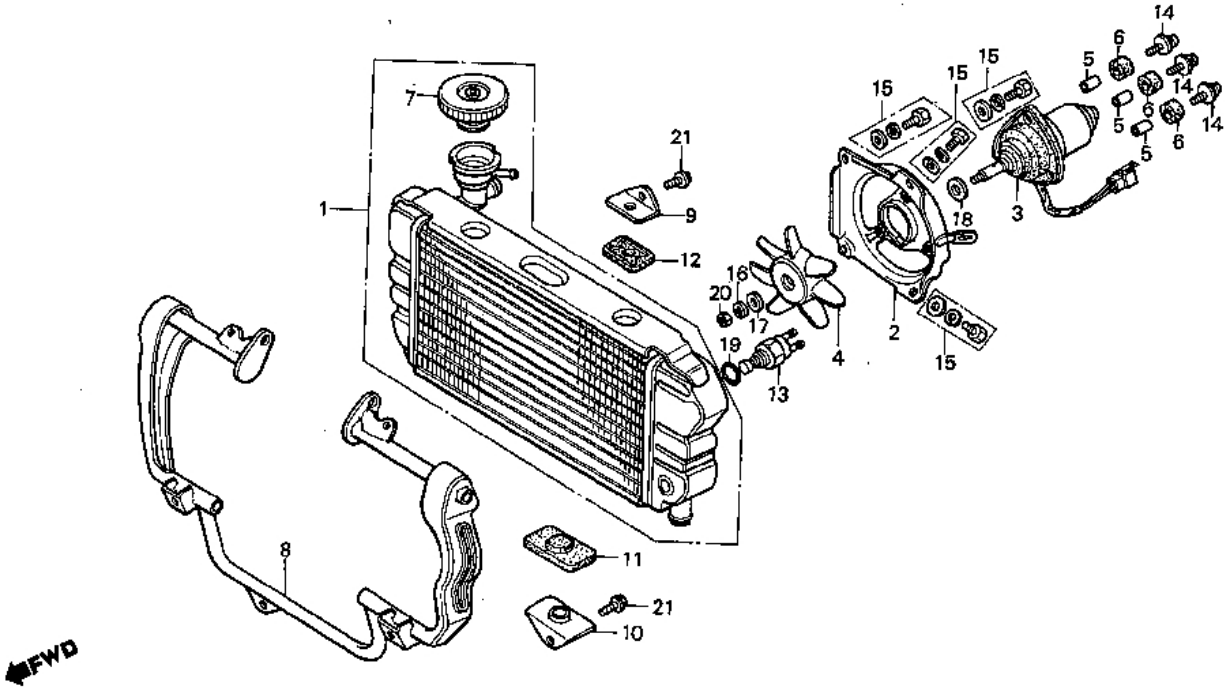

Service item	F.R.T.	Ref. No.	Part No.	Description	Reqd. No. CX500TCc	Serial No.	Area code
RADIATOR COMP.	1.4	1	19010-MC7-003	RADIATOR COMP.	1		
.MOTOR ASSY., FAN		2	19020-MC7-003	SHROUD COMP.	1		
SHROUD COMP.	1.2	3	19030-463-003	MOTOR ASSY., FAN	1		
.FAN, COOLING		4	19040-MC7-003	FAN, COOLING	1		
.GUARD, RADIATOR		5	19040-611-003	BUSH	3		
.THERMOSWITCH ASSY.		6	19041-611-003	RUBBER, BUSHING	3		
		7	19045-MC7-003	CAP COMP., RADIATOR	1		
		8	19112-MC7-000	GUARD, RADIATOR	1		
		9	19113-MC7-000	BRACKET, RADIATOR UPPER	2		
		10	19114-MC7-000	BRACKET, RADIATOR LOWER	2		
		11	19115-MC7-000	CUSHION, RADIATOR LOWER	2		
		12	19116-MC7-000	CUSHION, RADIATOR UPPER	2		
		13	37760-MC7-003	THERMOSWITCH ASSY.	1		
		14	90041-679-003	SCREW-WASHER, 4X18	3		
		15	90042-463-003	BOLT-WASHER, 6X10	4		
		16	90401-679-003	WASHER, SPRING, 5MM	1		
		17	90402-679-003	WASHER, PLAIN, 5MM	1		
		18	90403-679-003	WASHER, PLAIN, 6.8MM	1		
		19	91307-611-000	O-RING, 13.5X1.4	1		
		20	94001-05080-0S	NUT, HEX., 5MM	1		
		21	95700-06016-00	BOLT, FLANGE, 6X16	4		

1981.10.20 E F2

F 3

F-2

Front combination light (B,CM,E,ED,F,IT,SA,U)

Eclairage avant combiné (B,CM,E,ED,F,IT,SA,U)

Vorderkombinationslicht (B,CM,E,ED,F,IT,SA,U)

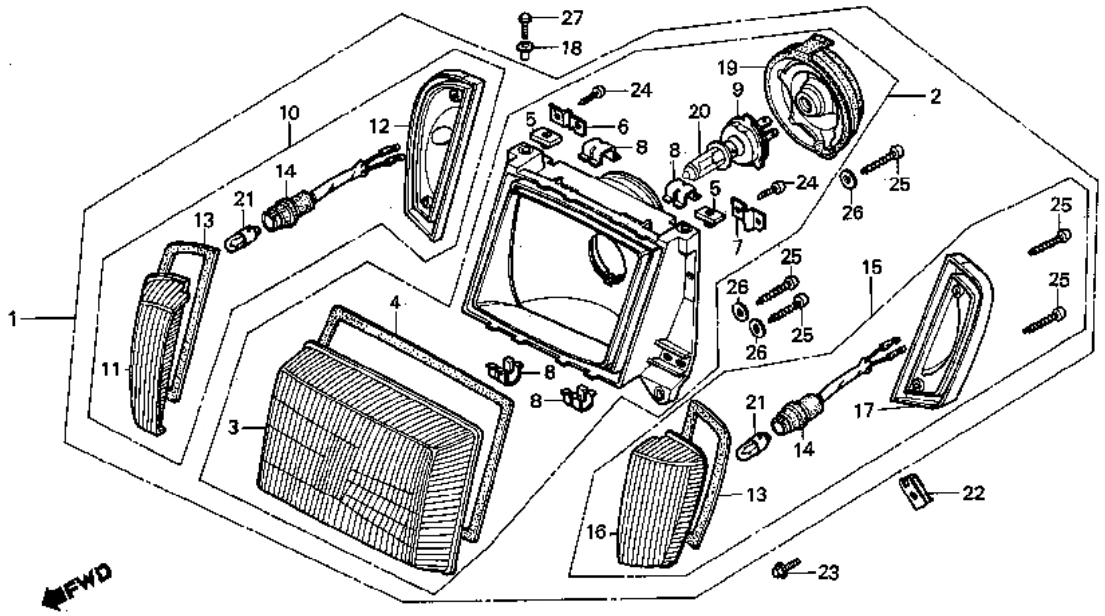

BMC7-22

Service item	F.R.T.	Ref. No.	Part No.	Description	Reqd. No. CX500TCc	Serial No.	Area code
LIGHT ASSY., FR. COMBINATION	0.2	1	33100-MC7-602	LIGHT ASSY., FR. COMBINATION	1		E,U
.HEADLIGHT ASSY.			33100-MC7-622	LIGHT ASSY., FR. COMBINATION	1		F
.SOCKET ASSY., POSITION LIGHT			33100-MC7-642	LIGHT ASSY., FR. COMBINATION	1		B,ED,IT,SA
.LIGHT ASSY., POSITION							
.H4 BULB			33100-MC7-672	LIGHT ASSY., FR. COMBINATION	1		CM
LENS, HEADLIGHT	0.3	2	33101-MC7-601	HEADLIGHT ASSY.	1		E,U
			33101-MC7-621	HEADLIGHT ASSY.	1		B,ED,F,IT,SA
			33101-MC7-671	HEADLIGHT ASSY.	1		CM
		3	33102-MC7-601	LENS, HEADLIGHT	1		E,U
			33102-MC7-611	LENS, HEADLIGHT	1		B,ED,F,IT,SA
			33102-MC7-671	LENS, HEADLIGHT	1		CM
		4	33103-MC7-611	PACKING, HEADLIGHT	1		B,CM,E,ED,F,IT,SA,U
		5	33109-MC7-611	NUT, HEADLIGHT CASE INSERT, 6MM	2		B,CM,E,ED,F,IT,SA,U
		6	33111-MC7-611	HOLDER A	1		B,CM,E,ED,F,IT,SA,U
		7	33112-MC7-611	HOLDER B	1		B,CM,E,ED,F,IT,SA,U
		8	33113-MC7-611	CRIP, LENS HOLDER	4		B,CM,E,ED,F,IT,SA,U
		9	33114-MC7-611	HOLDER COMP., HEADLIGHT BULB	1		B,CM,E,ED,F,IT,SA,U
		10	33160-MC7-601	LIGHT ASSY., R. POSITION	1		B,CM,E,ED,F,IT,SA,U
		11	33161-MC7-611	LENS, R.	1		B,CM,E,ED,F,IT,SA,U
		12	33162-MC7-601	HOUSING, R.	1		CM,E,U
			33162-MC7-611	HOUSING, R.	1		B,ED,F,IT,SA
		13	33163-MC7-611	PACKING, POSITION	2		B,CM,E,ED,F,IT,SA,U
		14	33164-MC7-601	SOCKET ASSY., POSITION LIGHT	2		CM,E,F,U
			33164-MC7-611	SOCKET ASSY., POSITION LIGHT	2		B,ED,IT,SA

F 4

F-2

Front combination light (B,CM,E,ED,F,IT,SA,U)

Eclairage avant combiné (B,CM,E,ED,F,IT,SA,U)

Vorderkombinationslicht (B,CM,E,ED,F,IT,SA,U)

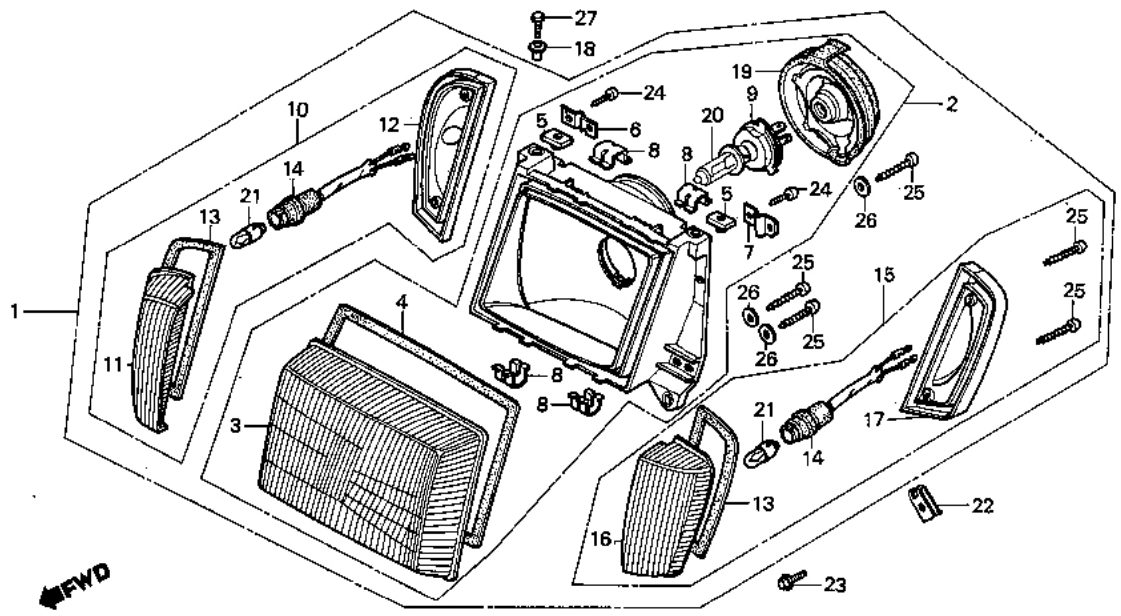

BMC7-22

Service item	F.R.T.	Ref. No.	Part No.	Description	Reqd. No. CX500TCc	Serial No.	Area code
		15	33170-MC7-601	LIGHT ASSY., L. POSITION	1		B,CM,E,ED,F,IT,SA,U
		16	33171-MC7-611	LENS, L.	1		B,CM,E,ED,F,IT,SA,U
		17	33172-MC7-601	HOUSING, L.	1		CM,E,U
			33172-MC7-611	HOUSING, L.	1		B,ED,F,IT,SA
		18	33713-428-610	COLLAR, TAILLIGHT	2		B,CM,E,ED,F,IT,SA,U
		19	33905-MC7-611	COVER, RUBBER	1		B,CM,E,ED,F,IT,SA,U
		20	34901-371-601	H4 BULB(12342/99) MFD. BY PHI-LIPS (LOCAL PROCUREMENT PART)	1		B,CM,E,ED,IT,SA,U
			34901-371-621	H4 BULB(12342/99) MFD. BY PHI-LIPS (LOCAL PROCUREMENT PART)	1		F
		21	34903-388-611	BULB, POSITION (12V 4W) (LOCL PROCUREMENT PART)	2		B,CM,E,ED,F,IT,SA,U
		22	64529-MC7-000	NUT, CLIP, 6MM	2		B,CM,E,ED,F,IT,SA,U
		23	90114-428-900	BOLT B, AIR CLEANER CASE SETTING	2		B,CM,E,ED,F,IT,SA,U
		24	93901-34220	SCREW, TAPPING, 4X10	6		B,CM,E,ED,F,IT,SA,U
		25	93901-35420	SCREW, TAPPING, 5X20	10		B,CM,E,ED,F,IT,SA,U
		26	94101-05800	WASHER, PLAIN, 5MM	6		B,CM,E,ED,F,IT,SA,U
		27	95700-06016-00	BOLT, FLANGE, 6X16	2		B,CM,E,ED,F,IT,SA,U

F 5

F-2-1

Front combination light (G,H,SW)

Eclairage avant combiné (G,H,SW)

Vorderkombinationslicht (G,H,SW)

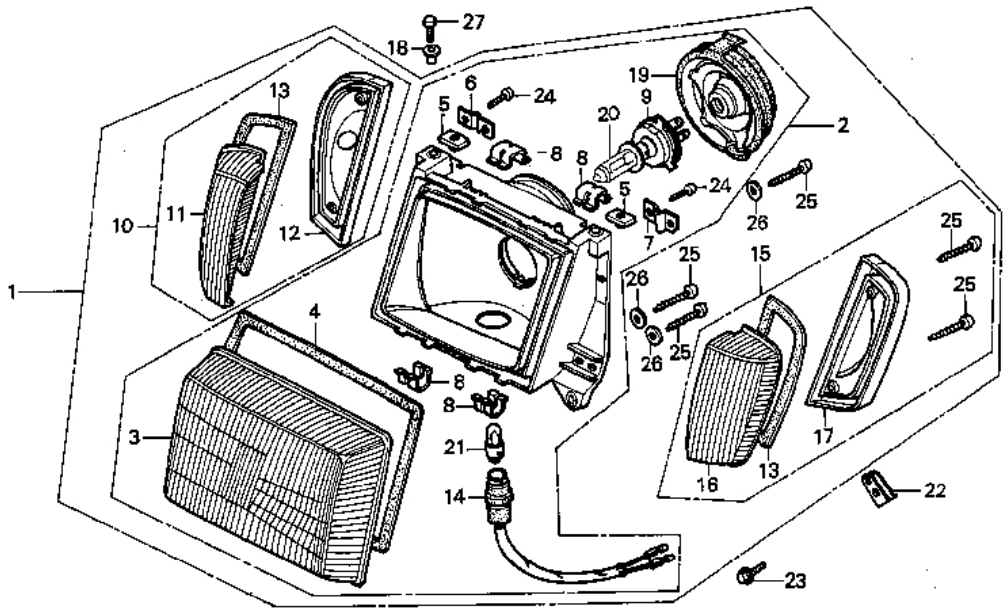

BMC7-22A

Service item	F.R.T.
LIGHT ASSY., FR. COMBINATION	0.2
•HEADLIGHT ASSY.	
•SOCKET ASSY., POSITION LIGHT	
•ACCESORY, POSITION	
•H4 BULB	
LENS, HEADLIGHT	0.3

Ref. No.	Part No.	Description	Reqd. No. CX500TCc	Serial No.	Area code
1	33100-MC7-612	LIGHT ASSY., FR. COMBINATION	1		G,H,SW
2	33101-MC7-611	HEADLIGHT ASSY.	1		G,H,SW
3	33102-MC7-611	LENS, HEADLIGHT	1		G,H,SW
4	33103-MC7-611	PACKING, HEADLIGHT	1		G,H,SW
5	33109-MC7-611	NUT, HEADLIGHT CASE INSERT, 6MM	2		G,H,SW
6	33111-MC7-611	HOLDER A	1		G,H,SW
7	33112-MC7-611	HOLDER B	1		G,H,SW
8	33113-MC7-611	CRIP, LENS HOLDER	4		G,H,SW
9	33114-MC7-611	HOLDER COMP., HEADLIGHT BULB	1		G,H,SW
10	33160-MC7-611	ACCESORY, R. POSITION	1		G,H,SW
11	33161-MC7-611	LENS, R.	1		G,H,SW
12	33162-MC7-611	HOUSING, R.	1		G,H,SW
13	33163-MC7-611	PACKING, POSITION	2		G,H,SW
14	33164-MC7-611	SOCKET ASSY., POSITION LIGHT	1		G,H,SW
15	33170-MC7-611	ACCESORY, L. POSITION	1		G,H,SW
16	33171-MC7-611	LENS, L.	1		G,H,SW
17	33172-MC7-611	HOUSING, L.	1		G,H,SW
18	33713-428-610	COLLAR, TAILLIGHT	2		G,H,SW
19	33905-MC7-611	COVER, RUBBER	1		G,H,SW
20	34901-371-601	H4 BULB(12342/99) MFD. BY PHI-LIPS (LOCAL PROCUREMENT PART)	1		G,H,SW

F 6

F-2-1

Front combination light (G,H,SW)

Eclairage avant combiné (G,H,SW)

Vorderkombinationslicht (G,H,SW)

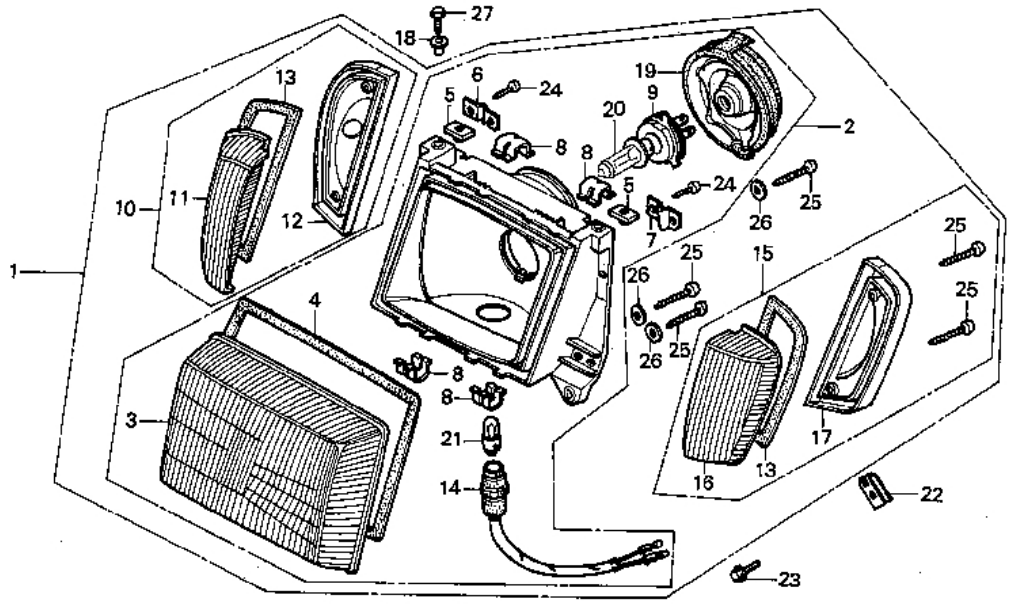

BMC7-22A

Service item	F.R.T.	Ref. No.	Part No.	Description	Reqd. No. CX500TCc	Serial No.	Area code
		21	34903-388-611	BULB, POSITION (12V 4W) (LOCL PROCUREMENT PART)	1		G,H,SW
		22	64529-MC7-000	NUT, CLIP, 6MM	2		G,H,SW
		23	90114-428-900	BOLT B, AIR CLEANER CASE SETTING	2		G,H,SW
		24	93901-34220	SCREW, TAPPING, 4X10	6		G,H,SW
		25	93901-35420	SCREW, TAPPING, 5X20	10		G,H,SW
		26	94101-05800	WASHER, PLAIN, 5MM	6		G,H,SW
		27	95700-06016-00	BOLT, FLANGE, 6X16	2		G,H,SW

F 7

F-3

Combination meter

Compteur combiné

Kombinationsmesser

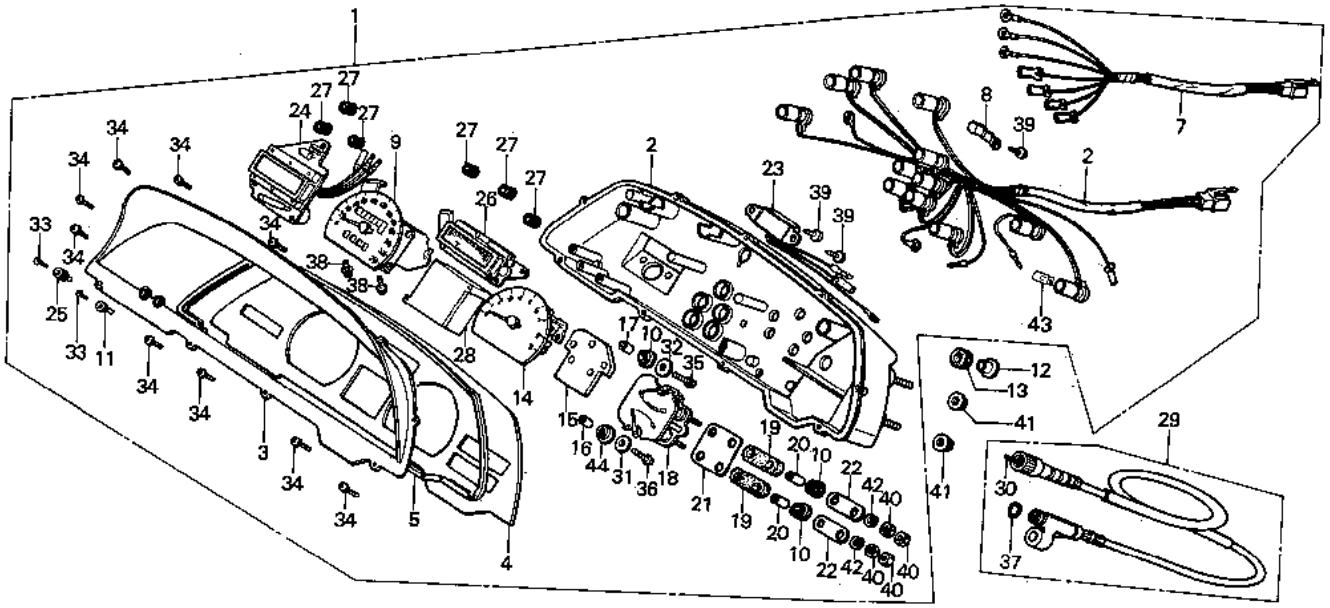

BMC7-23

Service item	F.R.T.
METER ASSY., COMBINATION	0.4
CASE	0.5
SPEEDOMETER ASSY.	0.6
TACHOMETER ASSY.	0.7
•TEMPERATURE METER ASSY., FUEL	
•METER ASSY., HOUR	
•METER ASSY., TURBO	
REGULATOR, 7V	0.3

Ref. No.	Part No.	Description	Reqd. No. CX500TCc	Serial No.	Area code
1	37100-MC7-601	METER ASSY, COMBINATION	1		E
	37100-MC7-611	METER ASSY., COMBINATION	1		B,ED,F,G,H,IT,SA,SW
	37100-MC7-651	METER ASSY., COMBINATION	1		U
	37100-MC7-721	METER ASSY., COMBINATION	1		CM
2	37101-MC7-611	CASE	1		
3	37102-MC7-611	GLASS	1		
4	37103-MC7-671	PLATE, REFLECTING	1		
5	37104-MC7-611	PACKING, METER	1		
6	37105-MC7-611	SOCKET COMP. A	1		
7	37106-MC7-611	SOCKET COMP. B	1		
8	37107-MC7-611	CLAMP	1		
9	37200-MC7-601	SPEEDOMETER ASSY.	1		E
	37200-MC7-611	SPEEDOMETER ASSY.	1		B,ED,F,G,H,IT,SA,SW,U
	37200-MC7-721	SPEEDOMETER ASSY.	1		CM
10	37203-MC7-611	RUBBER, METER SETTING	7		
11	37204-MC7-611	KNOB, TRIP METER	1		
12	37243-MC7-000	COLLAR, METER SETTING	4		
13	37244-MC7-000	RUBBER, METER SETTING	4		
14	37250-MC7-611	TACHOMETER ASSY.	1		B, E, ED, F, G, H, IT, SA, SW
	37250-MC7-671	TACHOMETER ASSY.	1		CM, U

F 8

F-3

Combination meter

Compteur combiné

Kombinationsmesser

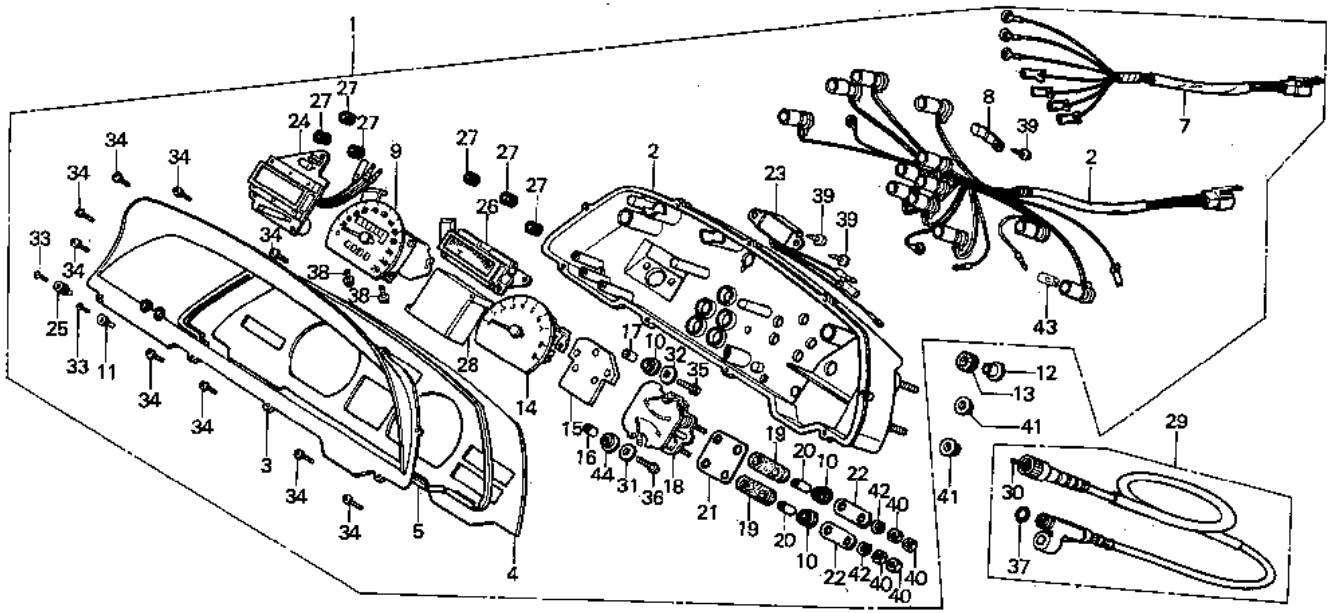

Service item	F.R.T.	Ref. No.	Part No.	Description	Regd. No. CX500TCc	Serial No.	Area code
		15	37253-MC7-611	CUSHION, TACHOMETER	1		
		16	37254-MC7-611	COLLAR, TACHOMETER SETTING	2		
		17	37255-MC7-611	COLLAR, TACHOMETER	3		
		18	37300-MC7-611	TEMPERATURE METER ASSY., FUEL	1		
		19	37302-MC7-611	CUSHION, FUEL TEMPERATURE METER	2		
		20	37303-MC7-611	COLLAR, FUEL TEMPERATURE METER	4		
		21	37304-MC7-611	STAY, FUEL TEMPERATURE METER	1		
		22	37305-MC7-611	WASHER	1		
		23	37410-MC7-611	REGULATOR, 7V	1		
		24	37460-MC7-611	METER ASSY., HOUR	1		
		25	37461-MC7-611	KNOB, CLOCK METER	1		
		26	37490-MC7-611	METER ASSY., TURBO	1		
		27	37491-MC7-611	RUBBER, TURBO CLOCK METER SETTING	6		
		28	37600-MC7-611	INDICATOR ASSY.	1		
		29	44830-MC7-000	CABLE ASSY., SPEEDOMETER	1		
		30	44831-MC7-300	CABLE, INNER	1		
		31	90101-MC7-611	WASHER, 4.3X12.5	10		

F 9

F-3

Combination meter

Compteur combiné

Kombinationsmesser

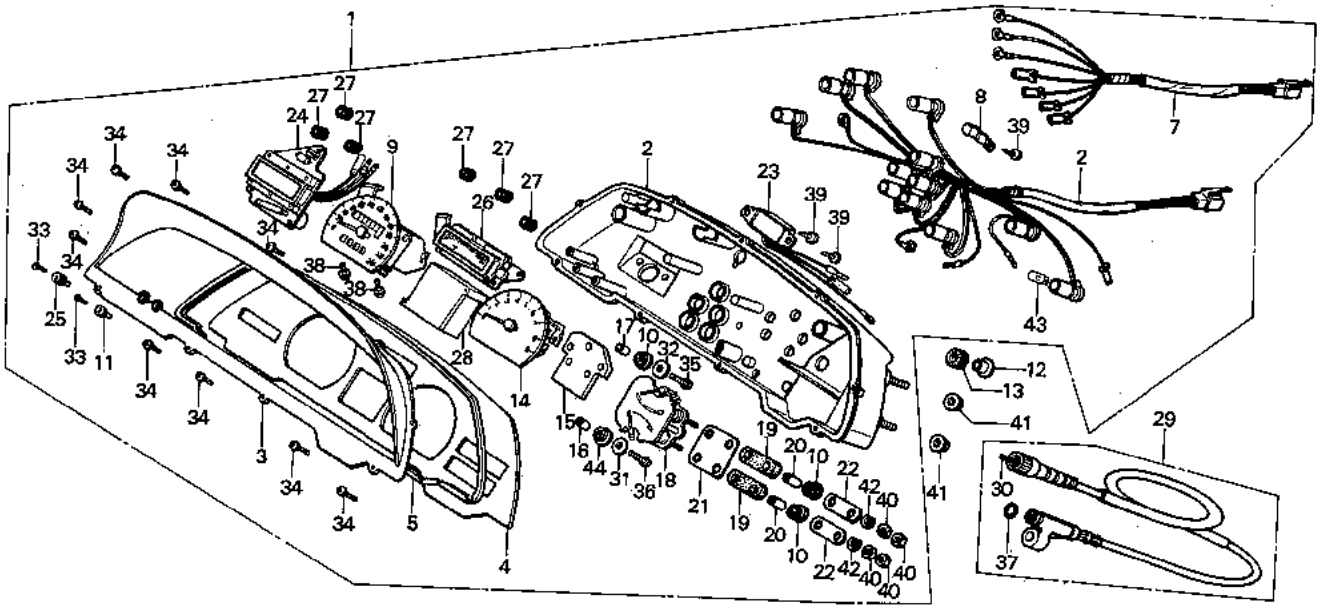

BMC7-23

Service item	F.R.T.	Ref. No.	Part No.	Description	Reqd. No. CX500TCc	Serial No.	Area code
		32	90102-MC7-611	WASHER, 3.3X12	3		
		33	90600-MC7-611	SCREW, FLAT, 2.3X8	2		
		34	90890-MC7-611	SCREW-WASHER, 3X14	9		
		35	90891-MC7-611	SCREW-WASHER, 3X20	3		
		36	90892-MC7-611	SCREW-WASHER, 4X20	2		
		37	91301-027-000	O-RING, 6.8X1.9	1		
		38	93893-04008	SCREW-WASHER, 4X8	2		
		39	93903-24320	SCREW, TAPPING, 4X12	4		
		40	94002-04000-0S	NUT, HEX., 4MM	13		
		41	94050-06000	NUT, FLANGE, 6MM	4		
		42	94111-04800	WASHER, SPRING, 4MM	13		
		43	37256-MC7-611	PACKING, TACHOMETER	2		
		44	34908-GA7-701	BULB, WEDGE BASE	13		

F 10

F-4

Handle lever • Switch • Cable

Levier de poignée • Interrupteur • Câble

Lenkstangenhebel • Schalter • Kabel

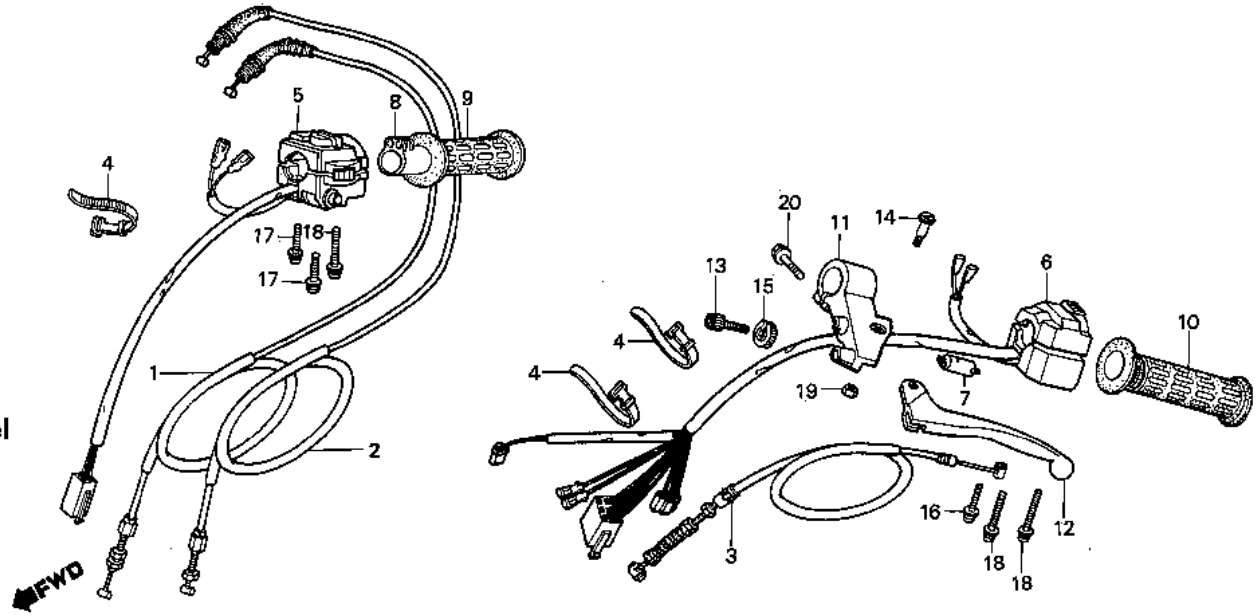

Service item	F.R.T.	Ref. No.	Part No.	Description	Reqd. No. CX500TCc	Serial No.	Area code
CABLE COMP. THROTTLE (ONE OR ALL)	0.4	1	17910-MC7-000	CABLE COMP. A, THROTTLE	1		
		2	17920-MC7-000	CABLE COMP. B, THROTTLE	1		
CABLE COMP., CLUTCH	0.3	3	22870-MC7-000	CABLE COMP., CLUTCH	1		
.PIPE, THROTTLE GRIP		4	32161-404-000	BAND B1, WIRE	3		
.BRACKET, L. HANDLE LEVER		5	35130-MC7-670	SWITCH ASSY., STARTER KILL	1		CM
SWITCH ASSY., STARTER KILL	0.6		35150-MC7-610	SWITCH ASSY., STARTER KILL	1		B,E,ED,F,G,H,IT,SA,SW,U
.SWITCH ASSY., WINKER		6	35200-MC7-610	SWITCH ASSY., WINKER	1		B,E,ED,F,G,H,IT,SA,SW,U
SWITCH COMP., FR. LEVER	0.2		35200-MC7-670	SWITCH ASSY., WINKER	1		CM
GRIP, HANDLE	0.1	7	35330-413-003	SWITCH COMP., FR. LEVER	1		
.LEVER, L. STEERING HANDLE		8	53141-300-010	PIPE, THROTTLE GRIP	1		
		9	53165-422-000	GRIP, R. HANDLE	1		
		10	53166-422-000	GRIP, L. HANDLE	1		
		11	53172-MC7-003	BRACKET, L. HANDLE LEVER	1		
		12	53178-425-003	LEVER, L. STEERING HANDLE	1		
		13	53192-268-000	BOLT, CLUTCH WIRE ADJUSTING	1		
		14	90113-MC7-000	BOLT, L. STEERING HANDLE PIVOT LEVER	1		
		15	90321-315-670	NUT, FIXING	1		
		16	93891-05030-07	SCREW-WASHER, 5X30	1		
		17	93891-05035-07	SCREW-WASHER, 5X35	2		
		18	93891-05045-07	SCREW-WASHER, 5X45	3		
		19	94002-06000-05	NUT, HEX., 6MM	1		
		20	95700-06025-07	BOLT, FLANGE, 6X25	1		

1981.10.20 E F10

F 11

F-5

Front brake master cylinder

Maître cylindre de frein avant

Vorderradbremse-Hauptzylinder

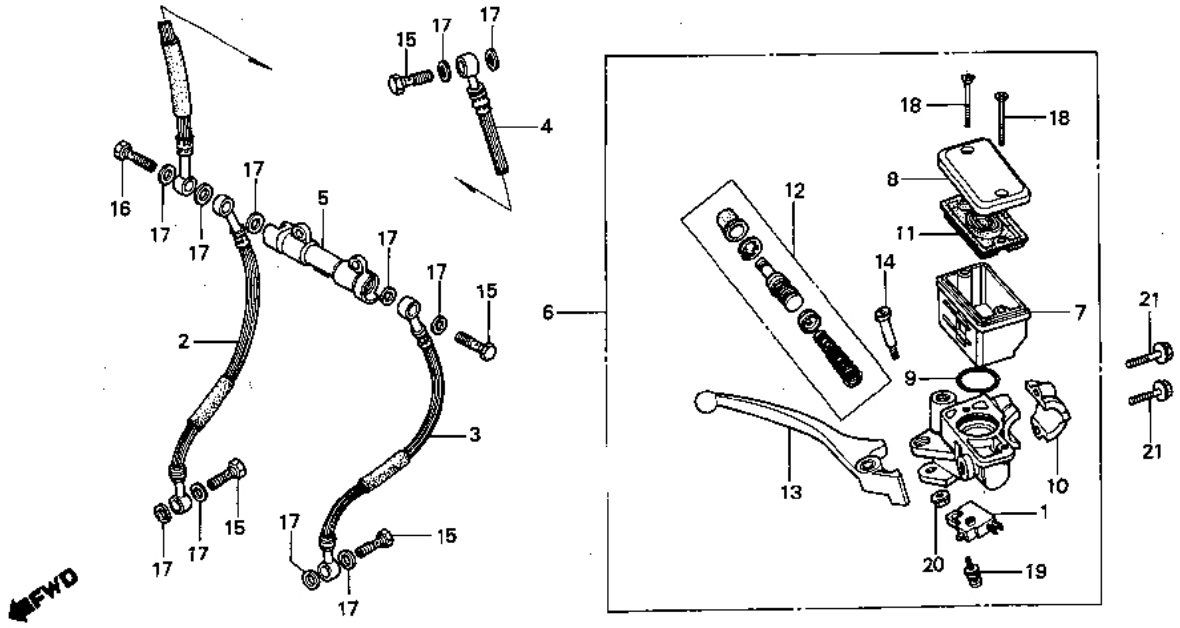

Service item	F.R.T.
SWITCH ASSY., FR. STOP	0.1
•DIAPHRAGM	
•LEVER COMP., R. HANDLE	
HOSE FR. BRAKE	0.3
(WHEN SERVICING COMP., UNIT, F.R.T. IS 0.4.)	
•JOINT, TWO WAY	
CYLINDER ASSY., FR. MASTER	0.4
•CYLINDER SET, MASTER	
CUP, OIL	0.2

Ref. No.	Part No.	Description	Reqd. No. CX500TCc	Serial No.	Area code
1	35340-MA5-671	SWITCH ASSY., FR. STOP	1		
2	45124-MC7-003	HOSE A, R. FR. BRAKE	1		
3	45125-MC7-003	HOSE A, L. FR. BRAKE	1		
4	45126-MC7-003	HOSE ASSY., FR. BRAKE	1		
5	45127-MA1-003	JOINT, TWO WAY (NISSHIN)	1		
6	45500-445-631	CYLINDER ASSY., FR. MASTER	1		
7	45511-MA5-671	CUP, OIL	1		
8	45513-MA5-671	CAP, OIL CUP	1		
9	45516-166-006	O-RING	1		
10	45517-MA5-671	HOLDER, MASTER CYLINDER	1		
11	45520-MA5-671	DIAPHRAGM	1		
12	45530-MA5-671	CYLINDER SET, MASTER	1		
13	53175-MA5-671	LEVER COMP., R. HANDLE	1		
14	90114-MA5-671	BOLT, R. STEERING HANDLE LEVER PIVOT	1		
15	90145-300-000	BOLT, OIL	4		
16	90145-422-010	BOLT, OIL	1		
17	90545-300-000	WASHER, OIL BOLT	11		
18	93600-04045-1G	SCREW, FLAT, 4X45	2		
19	93893-04012-18	SCREW-WASHER, 4X12	1		
20	94050-06000	NUT, FLANGE, 6MM	1		
21	95700-06025-07	BOLT, FLANGE, 6X25	2		

F 12

F-6

Handle pipe • Top bridge • Key set

Guidon • Haut de fourche • Jeu de clés

Lenkrohr • Obere Brücke • Schloßsatz

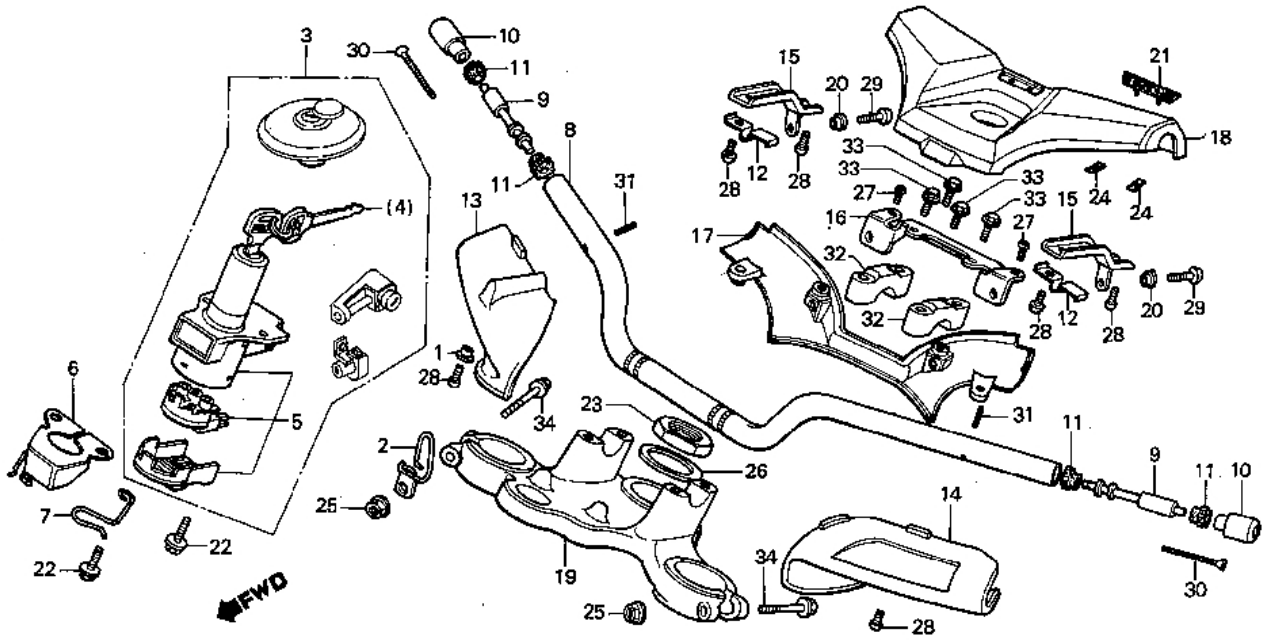

BMC7-26

Service item	F.R.T.	Ref. No.	Part No.	Description	Reqd. No. CX500TCc	Serial No.	Area code
KEY SET	0.8	1	16572-879-010	COLLAR, LEVER SETTING	1		
SWITCH ASSY., COMBINATION	0.7	2	22875-MC7-000	CLIP, CLUTCH CABLE	1		
.PIPE, STEERING HANDLE		3	35010-MC7-600	KEY SET	1		B,CM,E,F,H,IT,SA,SW,U
WEIGHT HANDLE.	0.1		35010-MC7-610	KEY SET	1		ED,G
.COVER, R. HANDLE LEVER		4	35121-MC7-811	KEY NO1, BLANK	(1)		B,CM,E,F,H,IT,SA,SW,U
(ONE OR ALL)			35121-MC7-812	KEY, BLANK	(1)		ED,G
.COVER, HANDLE UPPER			35122-MC7-811	KEY NO2, BLANK	(1)		B,CM,E,F,H,IT,SA,SW,U
STAY, HANDLE COVER	0.2	5	35100-MC7-601	SWITCH ASSY., COMBINATION	1		B,CM,E,F,H,IT,SA,SW,U
BRIDGE, FORK TOP	0.6		35100-MC7-611	SWITCH ASSY., COMBINATION	1		ED,G
		6	35106-MC7-610	COVER, COMBINATION SWITCH	1		ED,G
		7	50733-MC7-000	GUIDE, THROTTLE CABLE	1		B,CM,E,F,H,IT,SA,SW,U
		8	53100-MC7-000	PIPE, STEERING HANDLE	1		
		9	53101-MC7-000	WEIGHT B, HANDLE	2		
		10	53102-MC7-000	WEIGHT A, HANDLE	2		
		11	53107-121-730	RUBBER, HANDLE WEIGHT	4		
		12	53203-MC7-000	HOLDER, LEVER COVER	2		
		13	53204-MC7-000ZA	COVER, R. HANDLE LEVER *NH-114M-U*	1		
		14	53206-MC7-000ZA	COVER, L. HANDLE LEVER *NH-114M-U*	1		
		15	53207-MC7-000	BRACKET, HANDLE COVER	2		
		16	53208-MC7-000	STAY, HANDLE COVER	1		
		17	53209-MC7-000	COVER, HANDLE LOWER	1		

F 13

F-6

Handle pipe • Top bridge • Key set

Guidon • Haut de fourche • Jeu de clés

Lenkrohr • Obere Brücke • Schloßsatz

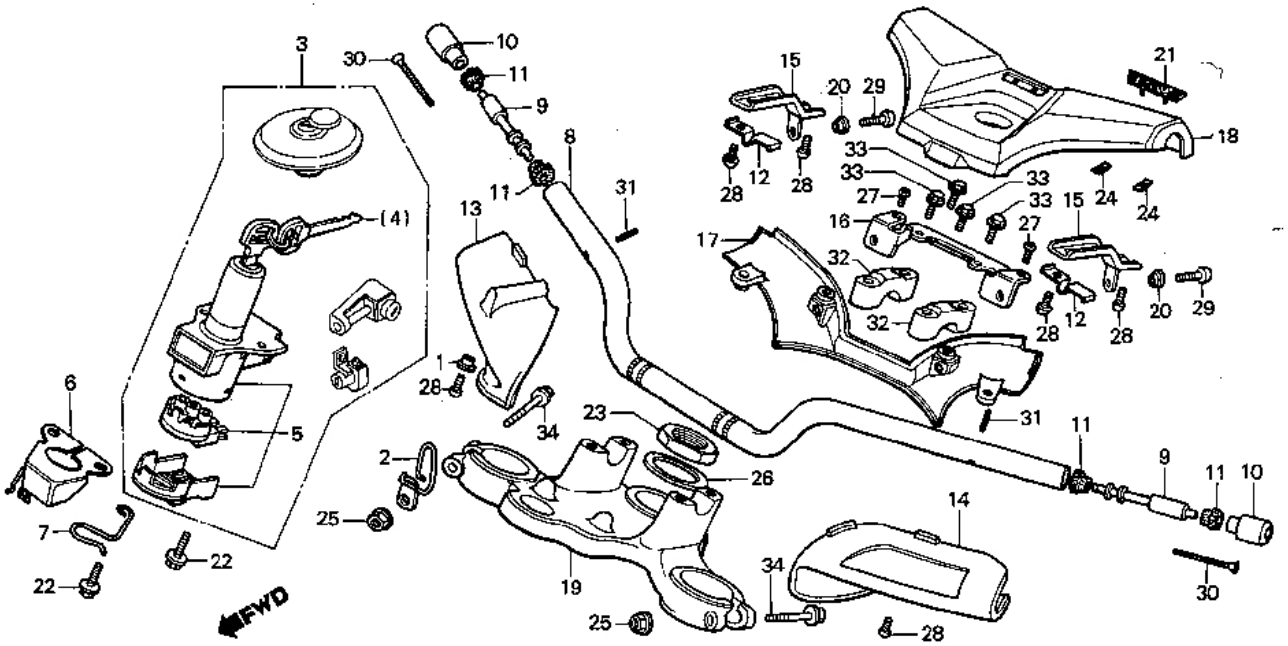

BMC7-26

Service item	F.R.T.	Ref. No.	Part No.	Description	Reqd. No. CX500TCc	Serial No.	Area code
		18	53210-MC7-000	COVER, HANDLE UPPER	1		
		19	53230-MC7-000ZA	BRIDGE, FORK TOP *NH-105*	1		B,CM,E,F,H,IT,SA,SW,U
			53230-MC7-611ZA	BRIDGE, FORK TOP *NH-105*	1		ED,G
		20	61101-441-000	COLLAR, FR. FENDER SETTING	2		
		21	87106-MC7-300	EMBLEM, HANDLE COVER	1		
		22	90105-MC7-000	BOLT, COMBINATION SWITCH SETTING	2		B,CM,E,F,H,IT,SA,SW,U
			90105-MC7-610	BOLT, COMBINATION SWITCH SETTING	2		ED,G
		23	90304-MC7-000	NUT, STEERING STEM	1		
		24	90315-504-000	NUT, SPEED, 3MM	2		
		25	90355-369-000	NUT, FLANGE, 7MM	2		
		26	90503-283-000	WASHER, STEERING STEM	1		
		27	93500-06008-0A	SCREW, PAN, 6X8	2		
		28	93500-06012-0A	SCREW, PAN, 6X12	6		
		29	93500-06016-0A	SCREW, PAN, 6X16	2		
		30	93700-06050-0G	SCREW, OVAL, 6X50	2		
		31	94305-40222	PIN, SPRING, 4X22	2		
		32	95014-22200	HOLDER B2, HANDLE PIPE UPPER	2		
		33	95800-08035-00	BOLT, FLANGE, 8X35	4		
		34	90155-369-000	BOLT, FLANGE, 7X54	2		

F 14

F-7

Steering stem • Horn

Tige de direction • Avertisseur

Steuerkopfschaft • Hupe

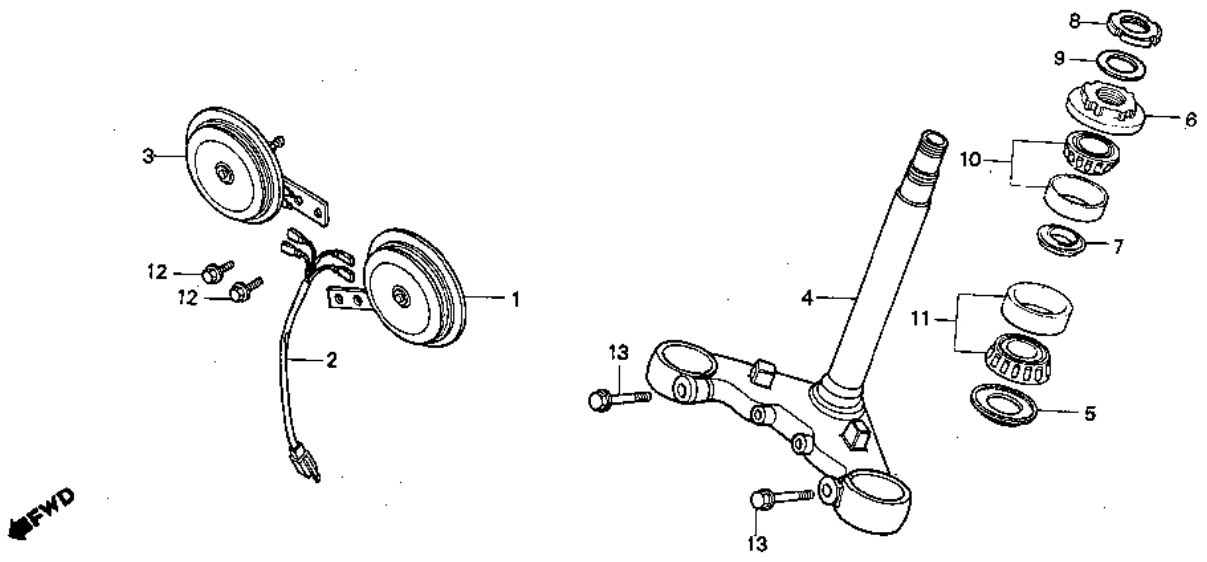

BMC7–27

Service item	F.R.T.	Ref. No.	Part No.	Description	Reqd. No. CX500TCc	Serial No.	Area code
SUB CORD A, HORN	0.3	1	38110-MC7-611	HORN COMP. (HIGH)	1		B,E,ED,F,G,H,IT,SW
HORN COMP.	0.2		38110-MC7-671	HORN COMP. (HIGH)	1		CM,SA,U
(ONE OR ALL)		2	38111-MC7-000	SUB CORD A, HORN	1		
STEM COMP., STEERING	1.4	3	38120-MC7-611	HORN COMP. (LOW)	1		B,E,ED,F,G,H,IT,SW
THREAD COMP., STEERING HEAD TOP	0.7		38120-MC7-671	HORN COMP. (LOW)	1		CM,SA,U
BEARING, HEAD PIPE	1.2	4	53200-MC7-000	STEM COMP., STEERING	1		
		5	53214-371-010	DUST SEAL, STEERING HEAD	1		
		6	53220-422-000	THREAD COMP., STEERING HEAD TOP	1		
		7	53223-371-000	HOLDER, GREASE	1		
		8	90302-425-830	THREAD B, STEERING HEAD TOP	1		
		9	90506-MC7-000	WASHER, STEM	1		
		10	91015-425-832	BEARING, HEAD PIPE UPPER (NACHI)	1		
		11	91016-371-000	BEARING, HEAD PIPE UNDER	1		
		12	95700-06010-07	BOLT, FLANGE, 6X10	2		
		13	95700-10035-07	BOLT, FLANGE, 10X35	2		

F 15

F-8

Front fender

Garde-boue avant

Vorderer Kotflügel

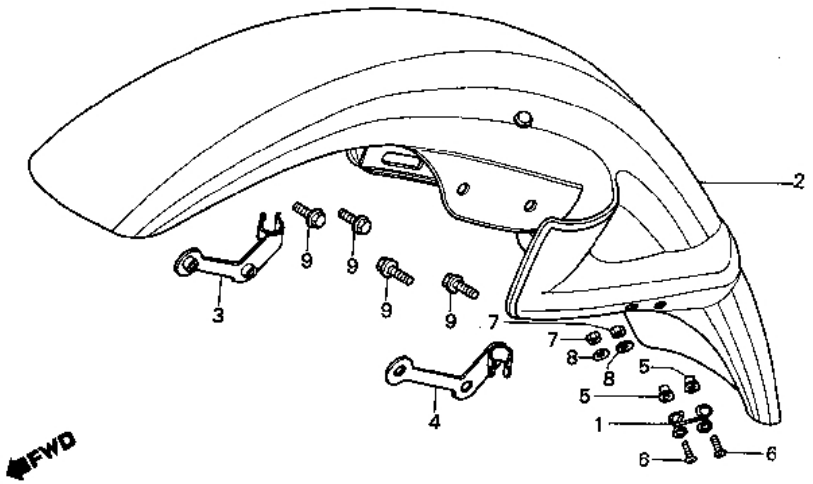

BMC7-28

Service item	F.R.T.	Ref. No.	Part No.	Description	Reqd. No. CX500TCc	Serial No.	Area code
FENDER COMP., FR.	0.5	1	44832-MC7-000	GUIDE, METER CABLE	1		
		2	61100-MC7-000ZA	FENDER COMP., FR. «NH-113P-A»	1		
		3	61108-MC7-000	CLAMP, R. FR. BRAKE HOSE	1		
		4	61109-MC7-000	CLAMP, L. FR. BRAKE HOSE	1		
		5	80114-MC7-000	COLLAR, RR. FENDER	2		
		6	93500-05016-0B	SCREW, PAN, 5X16	2		
		7	94001-05080-0S	NUT, HEX., 5MM	2		
		8	94101-05800	WASHER, PLAIN, 5MM	2		
		9	95700-06016-08	BOLT, FLANGE, 6X16	4		

F 16

F-9

Front fork

Fourche avant

Vordergabel

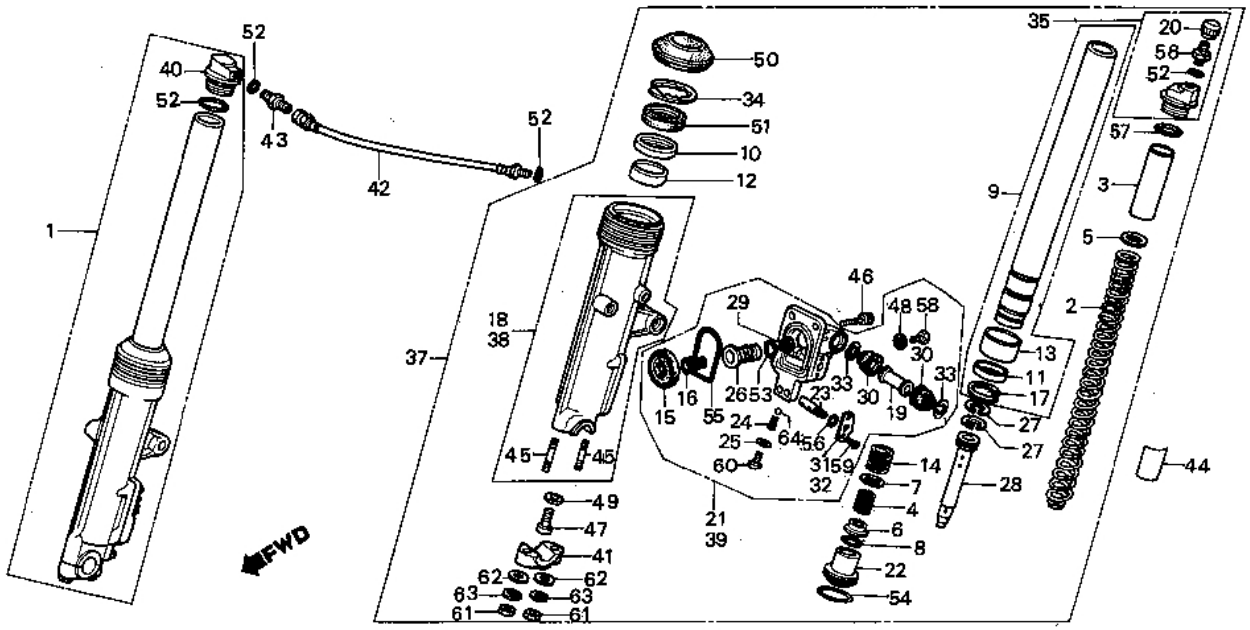

BMC7-29

Service item	F.R.T.	Ref. No.	Part No.	Description	Reqd. No. CX500TCc	Serial No.	Area code
FORK ASSY., FR.	0.6	1	51400-MC7-003	FORK ASSY., R. FR. (SHOWA)	1		
(ADD 0.2 FOR EACH.)		2	51401-MC7-003	SPRING A, FR. CUSHION	2		
SPRING FR. CUSHION	0.3	3	51402-MA0-770	SPRING, COLLAR	2		
(ADD 0.2 FOR EACH.)		4	51402-MC7-003	SPRING B, FR. CUSHION	2		
PIPE COMP., FR. FORK	1.0	5	51403-MA0-770	SEAT, SPRING	2		
(ADD 0.5 FOR EACH.)							
•CASE COMP., BOTTOM		6	51403-MC7-003	VALVE, OIL LOCK	2		
(ADD 0.5 FOR EACH.)		7	51404-MC7-003	SEAT B, SPRING	2		
•OIL SEAL, 37X50X11		8	51405-MC7-003	RING, STOPPER	2		
(ADD 0.5 FOR EACH.)		9	51410-MC7-003	PIPE COMP., FR. FORK	2		
PACKING	0.4	10	51412-461-003	RING, BACK UP	2		
•O-RING C, 54.4X3.1							
(ADD 0.3 FOR EACH.)		11	51413-MC7-003	RING, OIL LOCK	2		
CASE ASSY., PISTON	0.5	12	51414-461-003	BUSH, GUIDE	2		
(ADD 0.3 FOR EACH.)		13	51415-461-003	BUSH, SLIDER	2		
VALVE COMP., AIR	0.1	14	51416-MC7-003	SPRING, REBOUND	2		
HOSE COMP., FR. FORK JOINT	0.2	15	51417-MC7-003	PACKING	2		
		16	51418-MC7-003	SPRING, PISTON	2		
		17	51419-MC7-003	RING B, STOPPER	2		
		18	51421-MC7-003	CASE COMP., R. BOTTOM (SHOWA)	1		
		19	51423-MC7-003	COLLAR, PISTON	2		
		20	51425-169-003	DUST SEAL	1		

G 1

F-9

Front fork

Fourche avant

Vordergabel

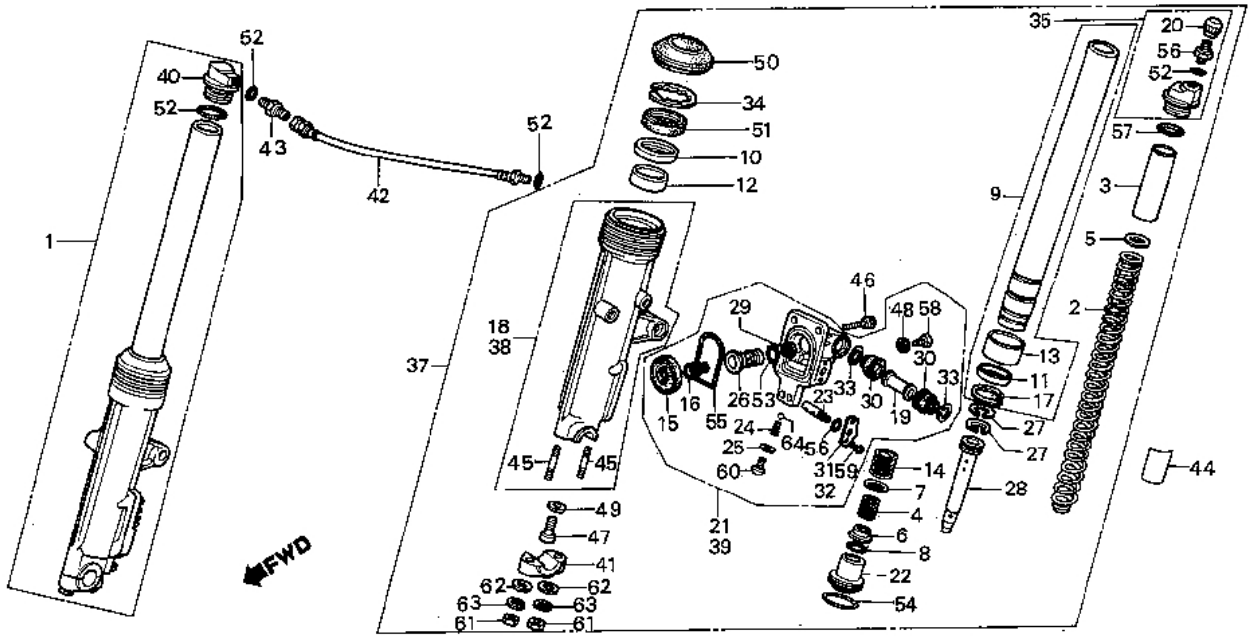

Service item	F.R.T.	Ref. No.	Part No.	Description	Reqd. No. CX500TCc	Serial No.	Area code	
		21	51430-MC7-003	CASE ASSY., R. PISTON	1			
		22	51432-MC7-003	PIECE, OIL LOCK	2			
		23	51433-MC7-003	ROD, ADJUSTER	2			
		24	51434-MC7-003	SPRING, CLICK	2			
		25	51435-MC7-003	WASHER, SPECIAL, 5MM	2			
		26	51436-MC7-003	PISTON	2			
		27	51437-MA0-770	RING, PISTON	4			
		28	51440-MC7-003	PIPE, SEAT	2			
		29	51441-MC7-003	RUBBER, STOPPER	2			
		30	51442-MC7-003	BOOT, PISTON CASE	4			
		31	51443-MC7-003	WASHER, R. SIDE	1			
		32	51444-MC7-003	WASHER, L. SIDE	1			
		33	51445-MC7-003	HOLDER, BOOT	4			
		34	51447-461-003	CIRCLIP, INTERNAL, 50MM	2			
		35	51450-MC7-003	BOLT ASSY., FR. FORK (SHOWA)	1			
		36	51456-469-013	VALVE COMP., AIR (SHOWA)	2			
		37	51500-MC7-003	FORK ASSY., L. FR. (SHOWA)	1			
		38	51521-MC7-003	CASE COMP., L. BOTTOM (SHOWA)	1			
		39	51530-MC7-003	CASE ASSY., L. PISTON	1			
		40	51555-461-003	BOLT, L. FR. FORK	1			

G 2

F-9

Front fork

Fourche avant

Vordergabel

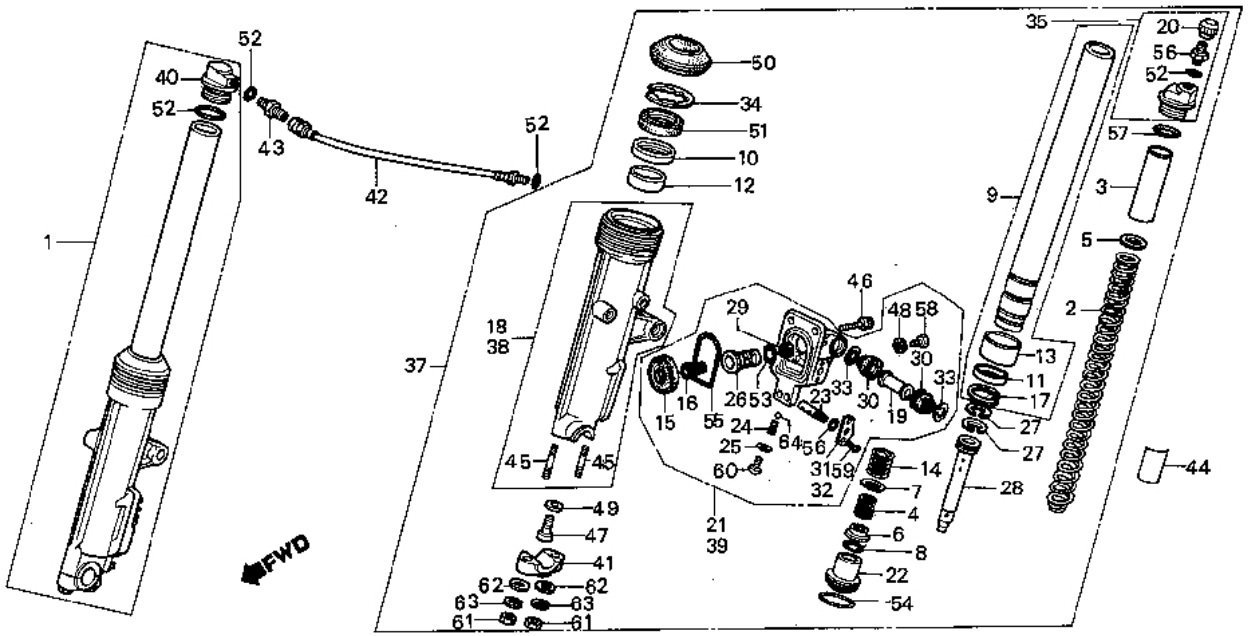

BMC7-29

Service item	F.R.T.	Ref. No.	Part No.	Description	Reqd. No. CX500TCc	Serial No.	Area code
		41	51634-MC7-003	HOLDER, AXLE	2		
		42	53137-MC7-003	HOSE COMP., FR. FORK JOINT	1		
		43	53139-463-000	CONNECTOR	1		
		44	87509-MC7-610	MARK, FR. FORK CAUTION	1		B,CM,E,ED,G,H,IT,SA,SW,U
			87509-MC7-620	MARK, FR. FORK CAUTION (FRENCH)	1		CM,F
		45	90102-MC7-003	BOLT, STUD, 8X53	4		
		46	90116-MC7-003	BOLT, SOCKET	8		
		47	90116-283-000	BOLT, SOCKET, 8X27	2		
		48	90543-273-000	PACKING, FR. FORK DRAIN COCK	2		
		49	90544-283-000	WASHER, SPECIAL, 8MM	2		
		50	91254-461-004	DUST SEAL, FR. FORK	2		
		51	91255-461-004	OIL SEAL, 37X50X11	2		
		52	91301-469-003	O-RING, 5.8X1.9	3		
		53	91305-MC7-003	O-RING D, 13.8X2.4	2		
		54	91306-MC7-003	O-RING E, 33.5X2	2		
		55	91309-MC7-003	O-RING C, 54.4X3.1	2		
		56	91310-MC7-003	O-RING B, 6.8X1.9	2		
		57	91356-371-000	O-RING, 29X2.4	4		
		58	92000-06008-0A	BOLT, HEX., 6X8	2		

G 3

F-9

Front fork

Fourche avant

Vordergabel

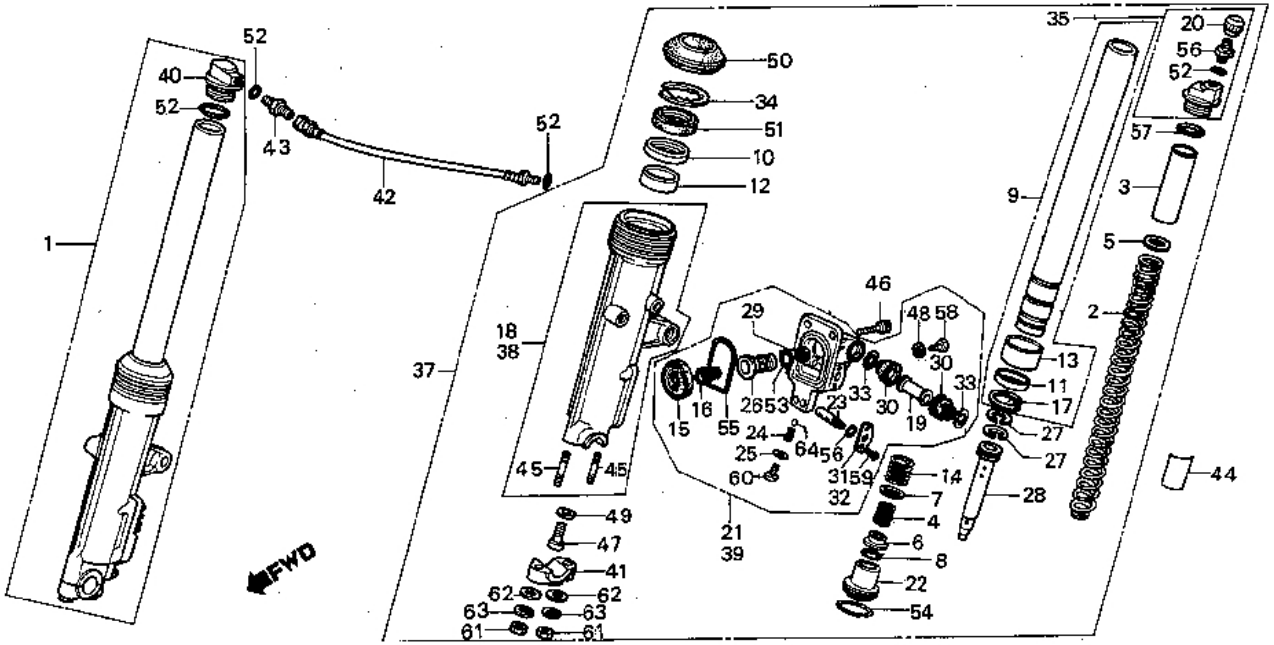

BMC7-29

Service item	F.R.T.	Ref. No.	Part No.	Description	Regd. No. CX500TCc	Serial No.	Area code
		59	93500-04010-1B	SCREW, PAN, 4X10	4		
		60	93500-05010-1A	SCREW, PAN, 5X10	2		
		61	94030-08000	NUT, HEX., 8MM	4		
		62	94101-08000	WASHER, PLAIN, 8MM	4		
		63	94111-08000	WASHER, SPRING, 8MM	4		
		64	96211-05000	BALL, STEEL, #5 (5/32)	2		

G 4

F-10

Front brake caliper

Etrier de frein avant

Vorderradbremssattel

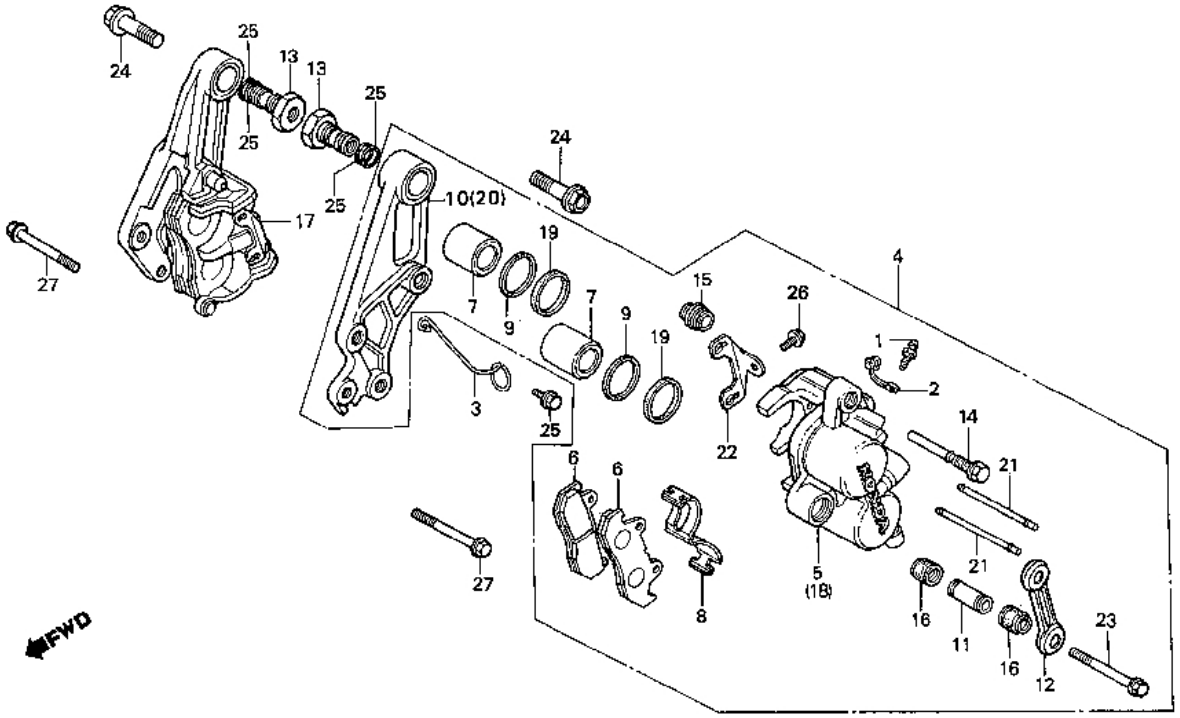

BMC7-30

Service item	F.R.T.	Ref. No.	Part No.	Description	Reqd. No. CX500TCc	Serial No.	Area code
CALIPER ASSY., FR.	0.3	1	43352-568-003	SCREW, BLEEDER	2		
(ADD 0.1 FOR EACH.)		2	43353-461-770	CAP, BLEEDER	2		
.PISTON		3	44832-MA3-000	CLAMP, SPEEDOMETER CABLE	1		
(ADD 0.1 FOR EACH.)		4	45100-MC7-006	CALIPER ASSY., L. FR.	1		
.BOOT B		5	45101-MC7-006	CALIPER COMP., L.	1		
CALIPER COMP.	0.5						
(ADD 0.3 FOR EACH.)		6	45105-MC7-004	PAD COMP., FR. (JB)	4		
PAD COMP., FR.	0.1	7	45107-MA3-006	PISTON	4		
.BRACKET COMP., FR.		8	45108-MA3-006	SPRING, PAD	2		
SEAL, PISTON	0.4	9	45109-166-006	DUST SEAL	4		
(ADD 0.1 FOR EACH.)		10	45110-MC7-006	BRACKET COMP., L. FR.	1		
		11	45111-MA3-006	SLEEVE	2		
		12	45113-MC7-610	BRIDGE, CALIPER BRACKET	2		
		13	45114-MC7-610	SLEEVE, FR. CALIPER BRACKET	2		
		14	45131-MA3-006	BOLT, PIN	2		
		15	45133-MA3-006	BOOT B	2		
		16	45133-166-016	BOOT, PIN	4		
		17	45200-MC7-006	CALIPER ASSY., R. FR.	1		
		18	45201-MC7-006	CALIPER COMP., R.	1		
		19	45209-166-006	SEAL, PISTON	4		
		20	45210-MC7-006	BRACKET COMP., R. FR.	1		
		21	45215-MA3-006	PIN, HANGER	4		
		22	45217-MA3-006	PLATE	2		
		23	90180-MA3-006	BOLT, FLANGE, 8X49	2		
		24	90185-MC7-000	BOLT, FLANGE, 10X53	2		
		25	91302-MC7-611	O-RING, 16.8X1.9	4		

G 5

F-10

Front brake caliper

Etrier de frein avant

Vorderradbremssattel

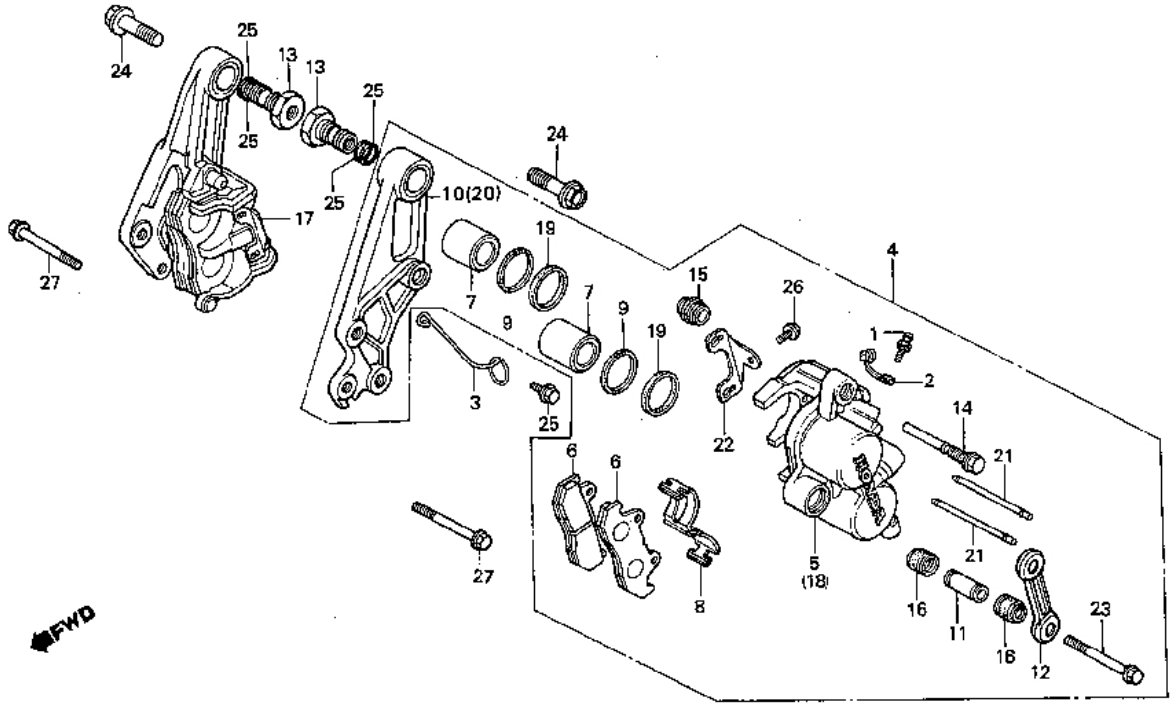

BMC7-30

Service item	F.R.T.	Ref. No.	Part No.	Description	Reqd. No. CX500TCc	Serial No.	Area code
		26	95700-06010-00	BOLT, FLANGE, 6X10	3		
		27	95800-08055-07	BOLT, FLANGE, 8X55	4		

G 6

F-11

Front wheel • Disk

Roue avant • Disque

Vorderrad • Bremsscheibe

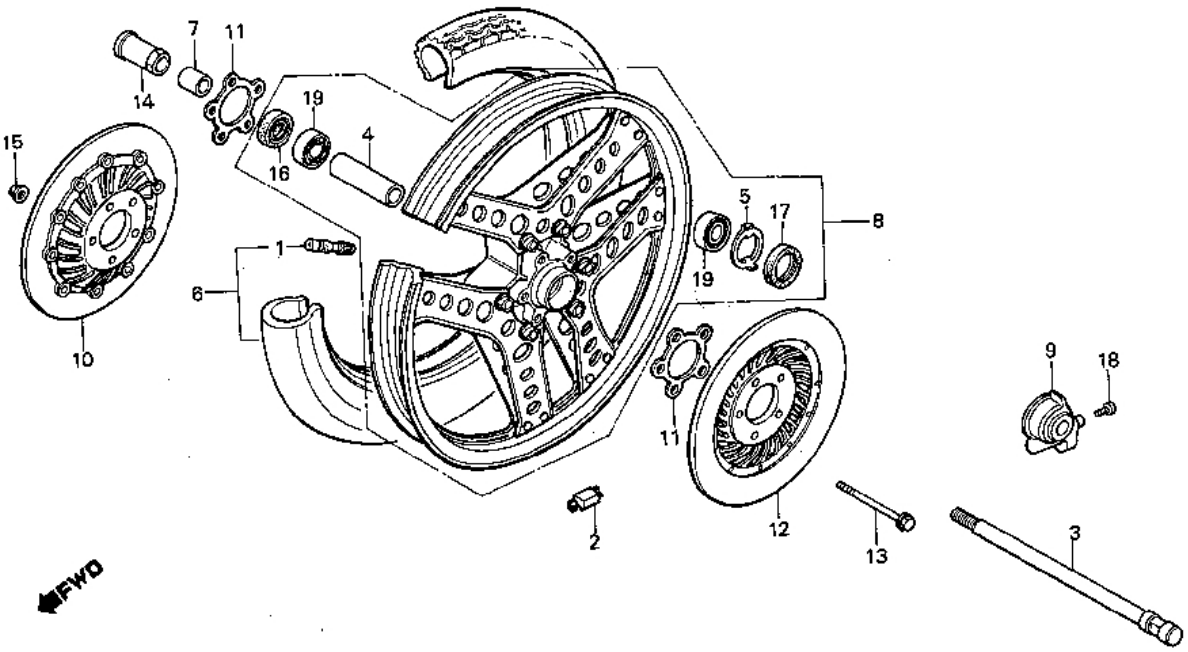

Service item	F.R.T.	Ref. No.	Part No.	Description	Reqd. No. CX500TCc	Serial No.	Area code
WEIGHT, BALANCE	0.8	1	42753-425-003	VALVE, RIM (BS)	1		
AXLE, FR. WHEEL	0.3		42753-425-004	VALVE, RIM (DUNLOP)	1		
.BOX ASSY., SPEEDOMETER GEAR		2	42704-MC7-000	WEIGHT, BALANCE (10G)	N		
.DUST SEAL, 40X50X5			42705-MC7-000	WEIGHT, BALANCE (20G)	N		
COLLAR, FR. WHEEL DISTANCE	0.6		42706-MC7-000	WEIGHT, BALANCE (30G)	N		
.BEARING, RADIAL BALL, 6302U		3	44301-MA4-670	AXLE, FR. WHEEL	1		
(ADD 0.1 FOR EACH.)		4	44620-410-000	COLLAR, FR. WHEEL DISTANCE	1		
TIRE ASSY., FR.	1.0	5	44680-410-000	RETAINER, GEAR BOX	1		
WHEEL COMP., FR.	1.1						
DISK COMP., FR.	0.4	6	44710-MC7-611	TIRE ASSY., FR. (3.50V18-4PR BS)	1		B,E,ED,F,G,H,IT,SW
(ONE OR ALL)			44710-MC7-612	TIRE ASSY., FR. (3.50V18-4PR DUNLOP)	1		B,E,ED,F,G,H,IT,SW
			44710-MC7-671	TIRE ASSY., FR. (3.50H18-4PR BS)	1		CM,SA,U
			44710-MC7-672	TIRE ASSY., FR. (3.50H18-4PR DUNLOP)	1		CM,SA,U
		7	44311-461-770	COLLAR, FR. WHEEL SIDE	1		
		8	44650-MC7-305	WHEEL COMP., FR.	1		
		9	44800-MC7-003	BOX ASSY., SPEEDOMETER GEAR	1		
		10	45120-MC7-000	DISK COMP., R. FR.	1		
		11	45128-MC7-000	SHIM, DAMPING	2		
		12	45220-MC7-000	DISK COMP., L. FR.	1		
		13	90103-438-000	BOLT, FLANGE, 8X104	5		
		14	90305-333-000	NUT, AXLE, 12MM	1		
		15	90309-428-731	NUT, FLANGE, 8MM	5		
		16	91252-MC7-003	DUST SEAL, 22X42X7	1		

1981.10.20 E G6

G 7

F-11

Front wheel • Disk

Roue avant • Disque

Vorderrad • Bremsscheibe

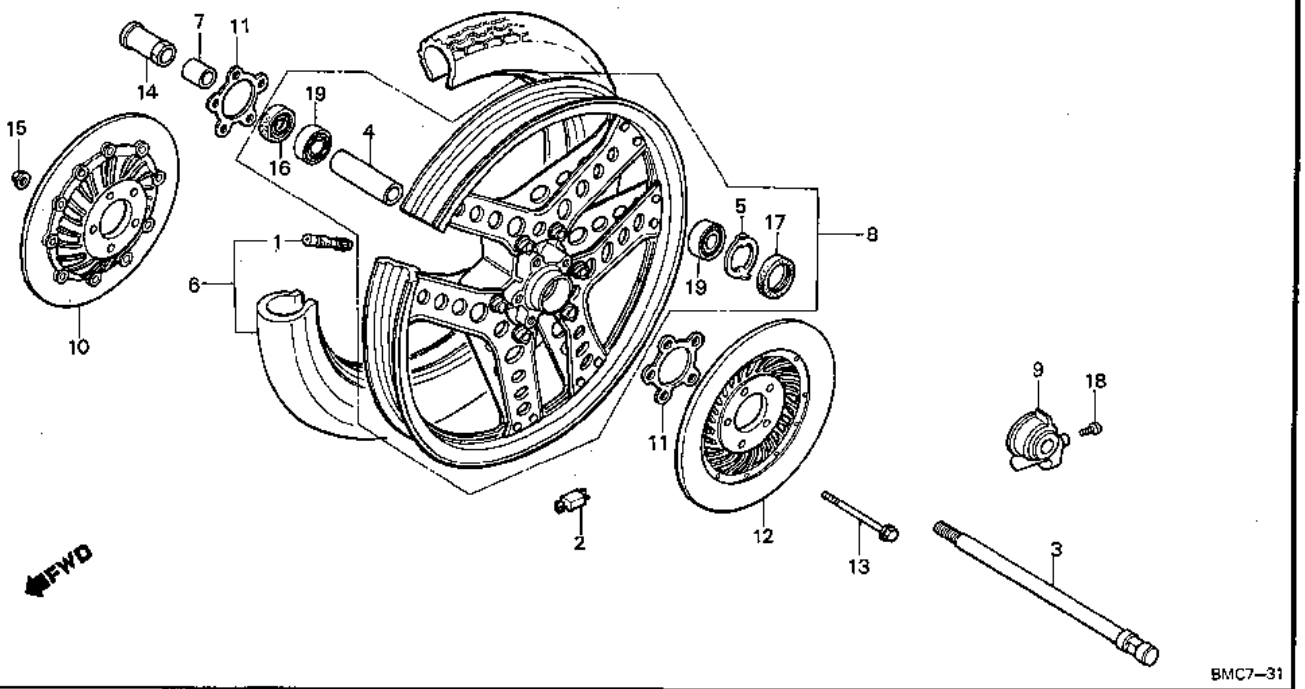

Service item	F.R.T.	Ref. No.	Part No.	Description	Reqd. No. CX500TCc	Serial No.	Area code
		17	91258-410-013	DUST SEAL, 40X50X5	1		
		18	93700-05016-0G	SCREW, OVAL, 5X16	1		
		19	96140-63020-10	BEARING, RADIAL BALL, 6302U	2		

G 8

F-12

Rear brake master cylinder

Maifre cylindre de frein arrière

Hinterradbremse-Hauptzylinder

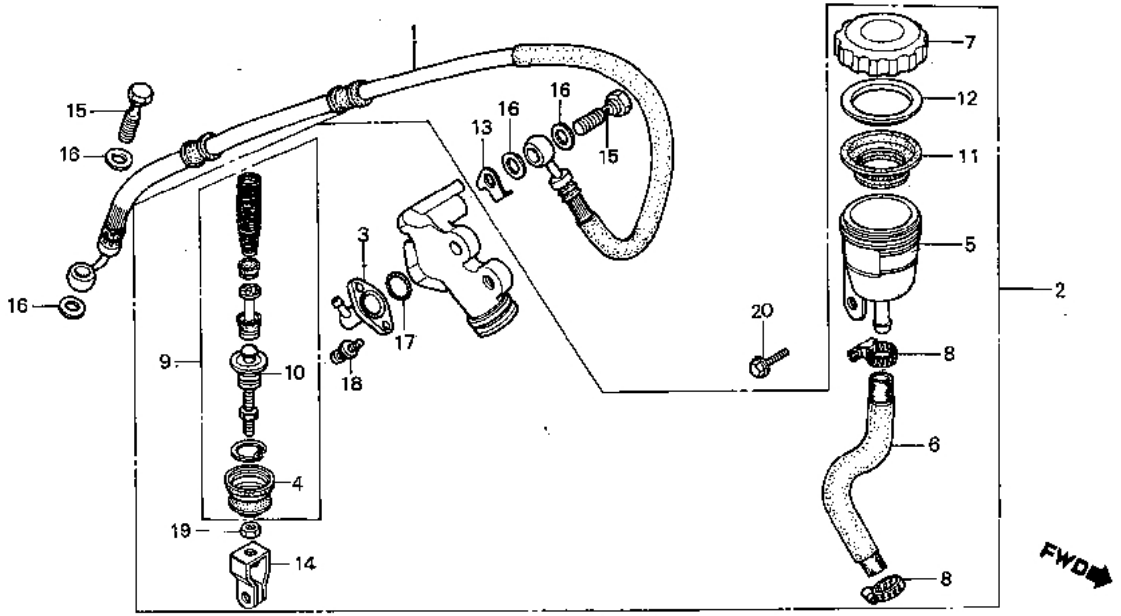

8MC7-32

Service item	F.R.T.
HOSE, RR. BRAKE	0.4
CYLINDER ASSY., RR. MASTER	0.5
HOSE, MASTER CYLINDER	0.3
CYLINDER SET, MASTER	0.6

Ref. No.	Part No.	Description	Reqd. No. CX500TCc	Serial No.	Area code
1	43310-MC7-003	HOSE, RR. BRAKE	1		
2	43500-MC7-006	CYLINDER ASSY., RR. MASTER	1		
3	43503-422-006	CONNECTOR, MASTER CYLINDER	1		
4	43504-371-013	BOOT, MASTER CYLINDER	1		
5	43511-443-761	CUP, MASTER CYLINDER OIL	1		
6	43512-MC7-611	HOSE, MASTER CYLINDER	1		
7	43513-461-771	CAP, OIL CUP	1		
8	43514-445-771	CLAMP, MASTER CYLINDER OIL HOSE	2		
9	43520-461-771	CYLINDER SET, MASTER	1		
10	43530-MC7-006	ROD COMP., PUSH	1		
11	45520-300-000	DIAPHRAGM	1		
12	45521-300-010	PLATE, DIAPHRAGM	1		
13	45535-MC7-000	STOPPER, OIL BOLT	1		
14	46504-445-771	JOINT, BRAKE ROD	1		
15	90145-300-000	BOLT, OIL	2		
16	90545-300-000	WASHER, OIL BOLT	4		
17	91212-422-006	O-RING, 14.8X2.4	1		
18	93893-04012-18	SCREW-WASHER, 4X12	2		
19	94002-08000-05	NUT, HEX., 8MM	1		
20	95700-06012-00	BOLT, FLANGE, 6X12	1		

G 9

F-13

Rear brake caliper

Etrier de frein arrière

Hinterrad-Bremssattel

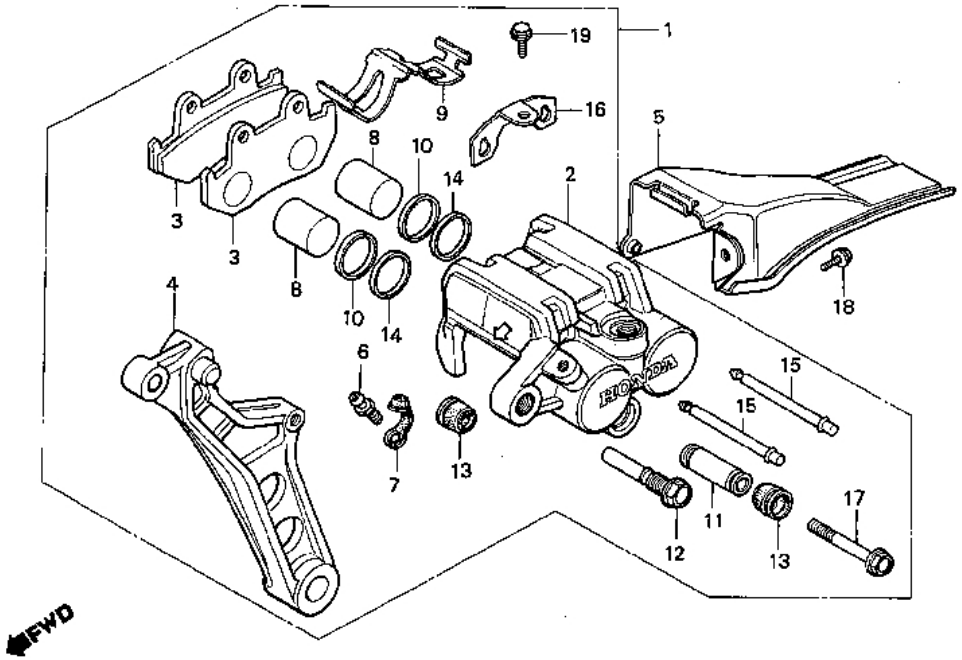

BMC7-33

Service item	F.R.T.	Ref. No.	Part No.	Description	Reqd. No. CX500TCc	Serial No.	Area code
CALIPER ASSY., RR.	0.6	1	43100-MC7-006	CALIPER ASSY., RR.	1		
CALIPER COMP., RR.	0.5	2	43101-MB9-006	CALIPER COMP., RR.	1		
.BRACKET, RR. BRAKE		3	43105-MC7-004	PAD COMP., FR. BRAKE	2		
PAD COMP., FR. BRAKE	0.1	4	43110-MC7-006	BRACKET, RR. BRAKE	1		
.COVER COMP., RR. DISK		5	43140-MB9-000	COVER COMP., RR. DISK	1		
PISTON	0.3						
(ADD 0.1 FOR EACH.)		6	43352-568-003	SCREW, BLEEDER	1		
SEAL, PISTON	0.4	7	43353-461-771	CAP, BLEEDER	1		
(ADD 0.1 FOR EACH.)		8	45107-MA3-006	PISTON	2		
		9	45108-MA3-006	SPRING, PAD	1		
		10	45109-166-006	DUST SEAL	2		
		11	45111-MA3-006	SLEEVE	1		
		12	45131-MA3-006	BOLT, PIN	1		
		13	45133-166-016	BOLT, PIN	2		
		14	45209-166-006	SEAL, PISTON	2		
		15	45215-MA3-006	PIN, HANGER	2		
		16	45217-MA3-004	PLATE	1		
		17	90180-MA3-006	BOLT, FLANGE, 8X49	1		
		18	93892-05010-07	SCREW-WASHER, 5X10	1		
		19	95700-06010-00	BOLT, FLANGE, 6X10	1		

G 10

F-14

Rear wheel

Roue arrière

Hinterrad

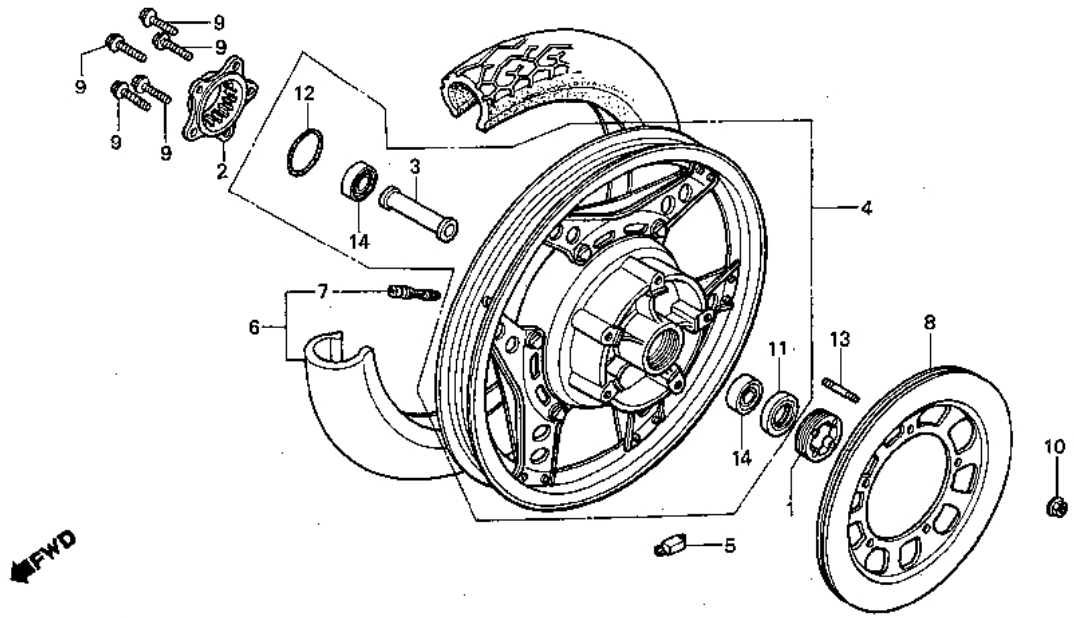

BMC7-34

Service item	F.R.T.
FLANGE, FINAL DRIVEN	0.5
.RETAINER, RR. WHEEL BEARING	
COLLAR, RR. WHEEL DISTANCE	0.6
.BEARING, RADIAL BALL, 6303U	
(ADD 0.1 FOR EACH.)	
WHEEL COMP., RR.	1.2
WEIGHT, BALANCE	0.9
TIRE ASSY., RR.	1.1
DISK, RR. BRAKE	0.4

Ref. No.	Part No.	Description	Reqd. No. CX500TCc	Serial No.	Area code
1	41231-430-000	RETAINER, RR. WHEEL BEARING	1		
2	42610-415-000	FLANGE, FINAL DRIVEN	1		
3	42620-MC7-000	COLLAR, RR. WHEEL DISTANCE	1		
4	42650-MC7-305	WHEEL COMP., RR.	1		
5	42704-MC7-000	WEIGHT, BALANCE (10G)	N		
	42705-MC7-000	WEIGHT, BALANCE (20G)	N		
	42706-MC7-000	WEIGHT, BALANCE (30G)	N		
6	42710-MC7-611	TIRE ASSY., RR. (120/90V17 BS)	1		B,E,ED,F,G,H,IT,SW
	42710-MC7-612	TIRE ASSY., RR. (120/90V17 DUNLOP)	1		B,E,ED,F,G,H,IT,SW
	42710-MC7-671	TIRE ASSY., RR. (120/90-17 64H BS)	1		CM,SA,U
	42710-MC7-672	TIRE ASSY., RR. (120/90-17 64H DUNLOP)	1		CM,SA,U
7	42753-425-003	VALVE, RIM (BS)	1		
	42753-425-004	VALVE, RIM (DUNLOP)	1		
8	43121-MC7-000	DISK, RR. BRAKE	1		
9	90130-MC7-000	BOLT, UBS, 10X34	5		
10	90301-MC7-003	U-NUT, FLANGE, 6MM	5		
11	91257-230-005	OIL SEAL, 28X42X7	1		
12	91357-415-003	O-RING, 54.5X2.4	1		
13	92712-06035-0E	BOLT, STUD, 6X35	5		
14	96140-63030	BEARING, RADIAL BALL, 6303U	2		

G 11

F-15

Final driven gear

Engrenages de réduction finale

Endabtriebsgetriebe

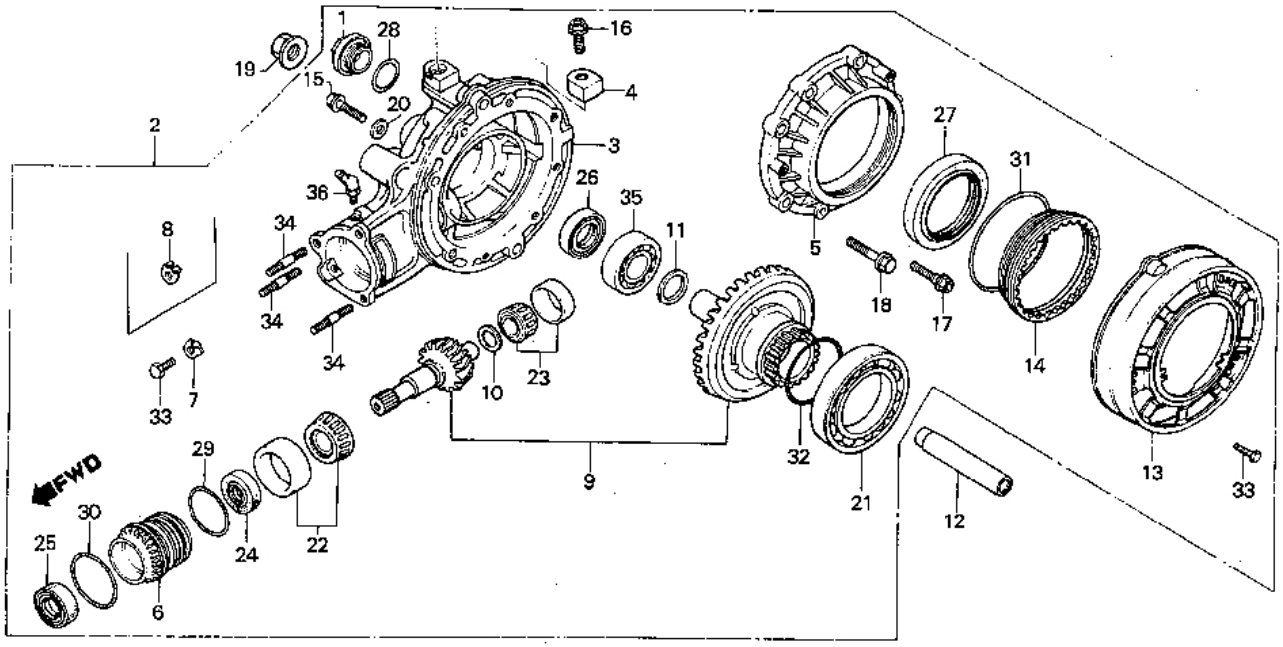

BMC7–35

Service item	F.R.T.	Ref. No.	Part No.	Description	Reqd. No. CX500TCc	Serial No.	Area code
GEAR ASSY., FINAL DRIVEN	0.5	1	12361-035-000	CAP, TAPPET ADJUSTING HOLE	1		
.PLATE, DUST GUARD		2	41300-MC7-000	GEAR ASSY., FINAL DRIVEN	1		
CASE, FINAL GEAR	2.6	3	41301-MC7-000	CASE, FINAL GEAR	1		
COVER, L. GEAR CASE	0.9	4	41306-463-010	CAP, BREATHER	1		
.BEARING, 30206C		5	41321-MC7-000	COVER, L. GEAR CASE	1		
RETAINER B, BEARING	0.7						
.OIL SEAL, 30X51X10		6	41331-MC7-000	RETAINER B, BEARING	1		
.OIL SEAL, 33X43X7		7	41332-MC7-000	LOCK A, BEARING ADJUSTING	1		
GEAR SET, FINAL DRIVEN	1.9	8	41333-MC7-000	LOCK B, BEARING ADJUSTING	1		
SHIM PINION GEAR	1.1	9	414A3-MC7-000	GEAR SET, FINAL DRIVEN	1		
.SHIM RING GEAR		10	41450-415-000	SHIM A, PINION GEAR (1.10)	1		
.BEARING, 30203C			41451-415-000	SHIM B, PINION GEAR (1.14)	1		
RETAINER A, BEARING	0.6		41452-415-000	SHIM C, PINION GEAR (1.18)	1		
.OIL SEAL, 70X90X8			41453-415-000	SHIM D, PINION GEAR (1.22)	1		
.BOLT, STUD, 10X55			41454-415-000	SHIM E, PINION GEAR (1.26)	1		
(ADD 0.1 FOR EACH.)			41455-415-000	SHIM F, PINION GEAR (1.30)	1		
BEARING, 6914	1.0		41456-415-000	SHIM G, PINION GEAR (1.34)	1		
.OIL SEAL, 30X47X7			41457-415-000	SHIM H, PINION GEAR (1.38)	1		
.BEARING, RADIAL BALL, 6006			41458-415-000	SHIM I, PINION GEAR (1.42)	1		

G 12

F-15

Final driven gear

Engrenages de réduction finale

Endabtriebsgetriebe

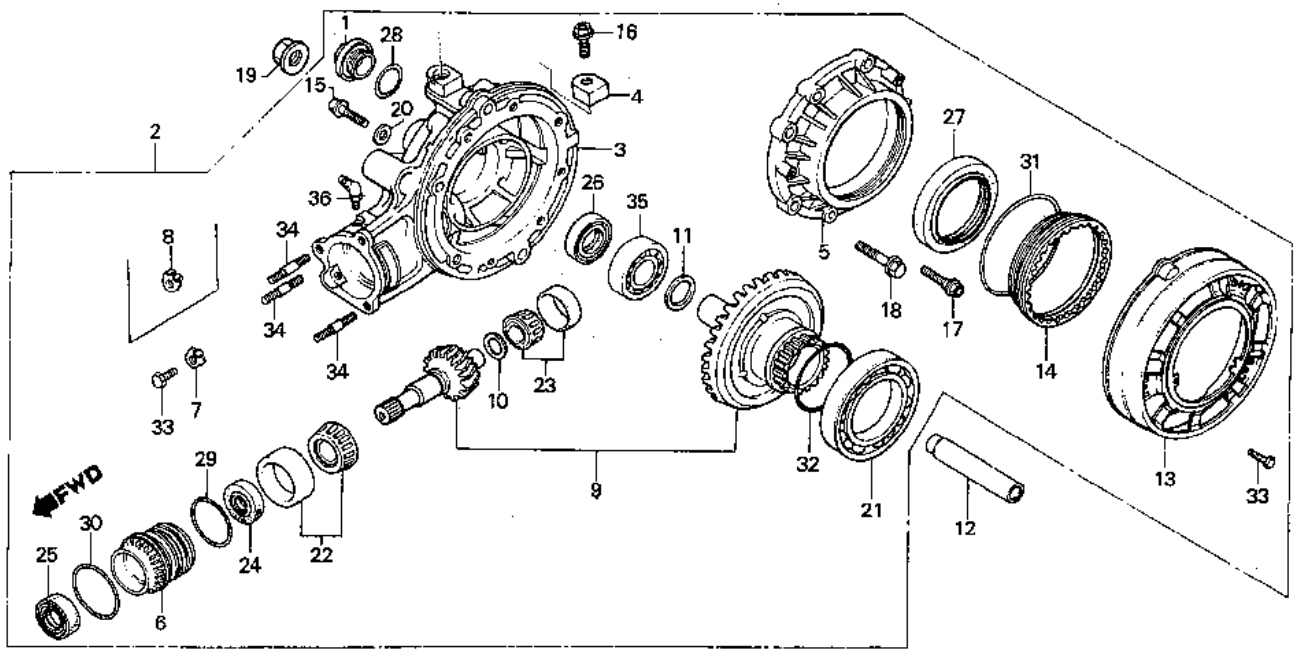

BMC7-35

Service item	F.R.T.	Ref. No.	Part No.	Description	Reqd. No. CX500TCc	Serial No.	Area code
			41459-415-000	SHIM J, PINION GEAR (1.46)	1		
			41460-415-000	SHIM K, PINION GEAR (1.50)	1		
			41461-415-000	SHIM L, PINION GEAR (1.54)	1		
			41462-415-000	SHIM M, PINION GEAR (1.58)	1		
			41463-415-000	SHIM N, PINION GEAR (1.62)	1		
			41464-415-000	SHIM O, PINION GEAR (1.66)	1		
			41465-415-000	SHIM P, PINION GEAR (1.70)	1		
			41466-415-000	SHIM Q, PINION GEAR (1.74)	1		
			41467-415-000	SHIM R, PINION GEAR (1.78)	1		
			41468-415-000	SHIM S, PINION GEAR (1.82)	1		
			41469-415-000	SHIM T, PINION GEAR (1.86)	1		
			41470-415-000	SHIM U, PINION GEAR (1.90)	1		
		11	41510-415-000	SHIM A, RING GEAR (1.80)	1		
			41511-415-000	SHIM B, RING GEAR (1.84)	1		
			41512-415-000	SHIM C, RING GEAR (1.88)	1		

G 13

F-15

Final driven gear

Engrenages de réduction finale

Endabtriebsgetriebe

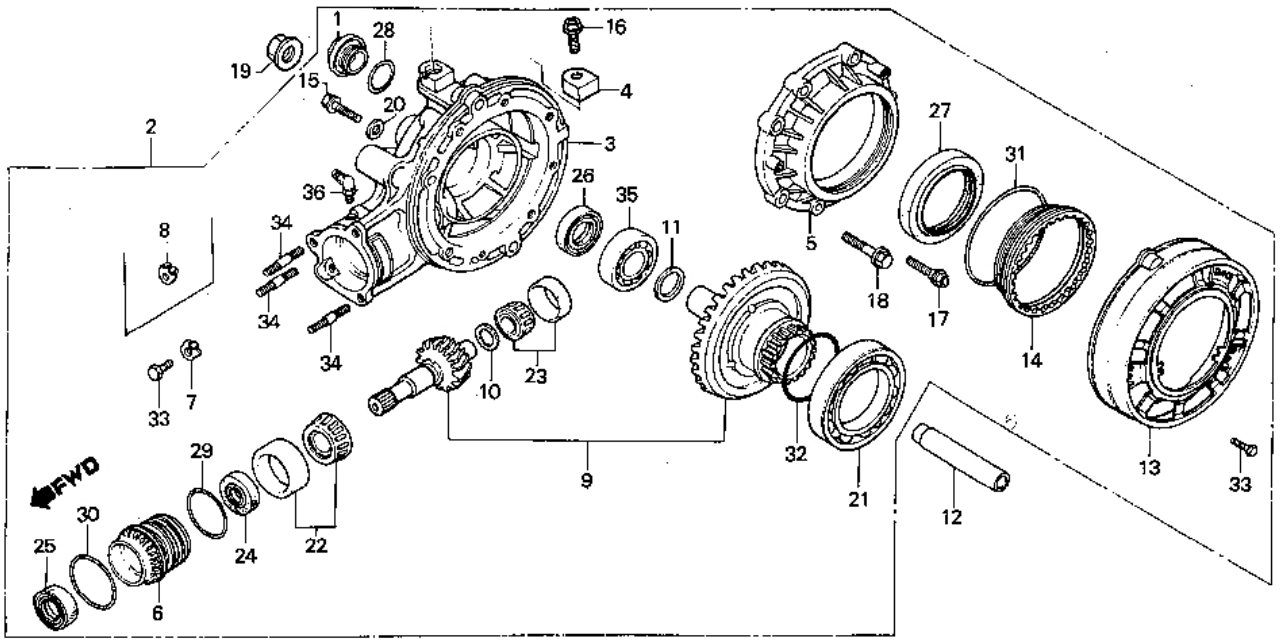

8MC7-35

Service item	F.R.T.	Ref. No.	Part No.	Description	Reqd. No. CX500TCc	Serial No.	Area code
			41513-415-000	SHIM D, RING GEAR (1.92)	1		
			41514-415-000	SHIM E, RING GEAR (1.96)	1		
			41515-415-000	SHIM F, RING GEAR (2.00)	1		
			41516-415-000	SHIM G, RING GEAR (2.04)	1		
			41517-415-000	SHIM H, RING GEAR (2.08)	1		
			41518-415-000	SHIM I, RING GEAR (2.12)	1		
			41519-415-000	SHIM J, RING GEAR (2.16)	1		
			41520-415-000	SHIM K, RING GEAR (2.20)	1		
			41521-415-000	SHIM L, RING GEAR (2.24)	1		
			41522-415-000	SHIM M, RING GEAR (2.28)	1		
			41523-415-000	SHIM N, RING GEAR (2.32)	1		
		12	42623-MC7-000	COLLAR, RR. AXLE DISTANCE	1		
		13	41324-415-000	PLATE, DUST GUARD	1		
		14	41351-371-000	RETAINER A, BEARING	1		
		15	90109-371-000	BOLT, SEALING, 8MM	1		
		16	90126-415-000	BOLT, BREATHER	1		
		17	90133-371-000	BOLT, FLANGE, 8X32	6		
		18	90134-371-000	BOLT, FLANGE, 10X38	2		
		19	90305-MC0-003	NUT, RR. AXLE U, 16MM	1		
		20	90471-580-000	WASHER, 8MM	1		

G 14

F-15

Final driven gear

Engrenages de réduction finale

Endabtriebsgetriebe

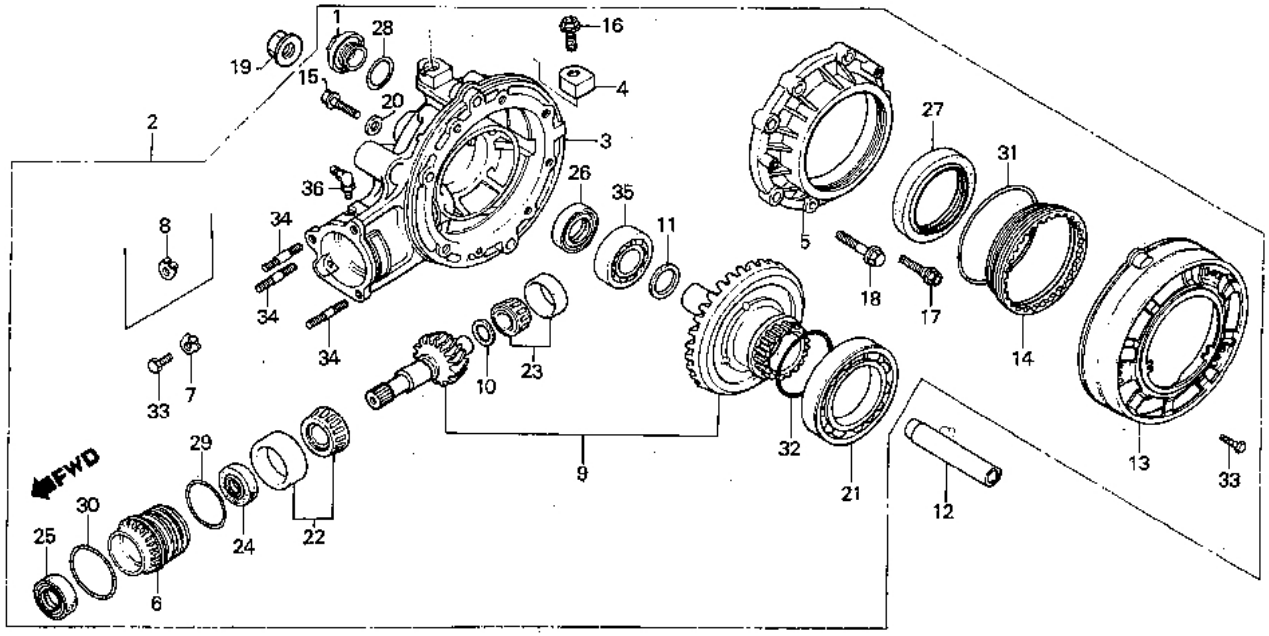

BMC7-3b

Service item	F.R.T.	Ref. No.	Part No.	Description	Reqd. No. CX500TCc	Serial No.	Area code
		21	91051-371-003	BEARING, 6914 (TOYO)	1		
			91051-371-004	BEARING, 6914 (KOYO)	1		
			91051-371-005	BEARING, 6914 (NACHI)	1		
		22	91061-463-004	BEARING, 30206C (KOYO)	1		
			91061-463-008	BEARING, 30206C (TOYO)	1		
		23	91062-415-013	BEARING, 30203C	1		
		24	91261-463-013	OIL SEAL, 30X51X10	1		
		25	91262-415-003	OIL SEAL, 33X43X7	1		
		26	91264-415-003	OIL SEAL, 30X47X7	1		
		27	91265-371-003	OIL SEAL, 70X90X8	1		
		28	91302-001-020	O-RING, 30.8MM	1		
		29	91353-463-005	O-RING, 57X4.3	1		
		30	91354-463-003	O-RING, 60.5X2.4	1		
		31	91355-371-003	O-RING, 96.5X2.0	1		
		32	91356-415-003	O-RING, 62.7X4	1		
		33	92000-06012	BOLT, HEX., 6X12	4		
		34	92700-10055-0E	BOLT, STUD, 10X55	3		
		35	96100-60063-00	BEARING, RADIAL BALL, 6006	1		
		36	96201-80000	NIPPLE, GREASE, B.T6S	1		

G 15

F-16

Fuel tank

Réservoir d'essence

Benzintank

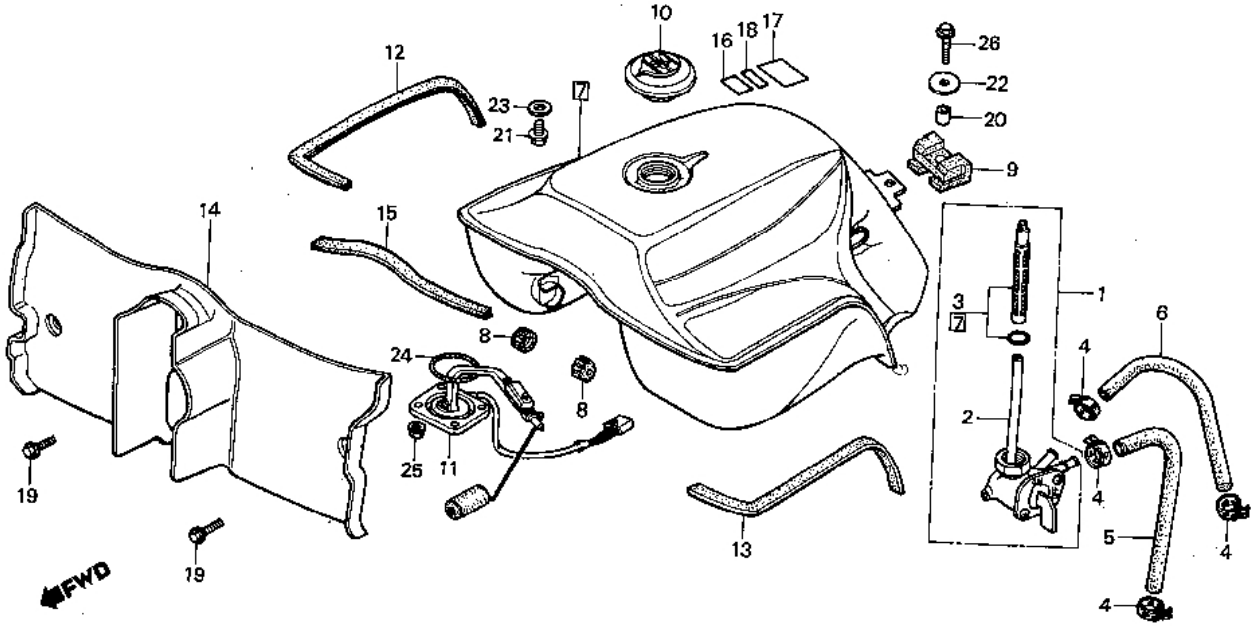

BMC7-36

Service item	F.R.T.	Ref. No.	Part No.	Description	Reqd. No. CX500TCc	Serial No.	Area code
COCK ASSY., FUEL	0.2	1	16950-MC7-005	COCK ASSY., FUEL	1		
INC. RELATIVE PART		2	16951-MC7-005	BODY COMP., COCK	1		
TANK SET, FUEL	0.4	3	16952-MC7-005	SCREEN SET, FUEL STRAINER	1		
.FUEL UNIT		4	16969-MC7-000	CLIP A, FUEL HOSE	4		
APRON, FUEL TANK	0.3	5	16970-MC7-000	HOSE A, FUEL	1		
		6	16971-MC7-000	HOSE C, FUEL	1		
		7	175A1-MC7-000ZA	TANK SET, FUEL *NH-113P-A*	1		
		8	17611-286-000	CUSHION, FUEL TANK FR.	2		
		9	17613-MC7-000	CUSHION, FUEL TANK RR.	1		
		10	17620-MC7-003	CAP COMP., FUEL FILLER	1		B,CM,E,F,H,IT,SA,SW,U
			17620-MC7-611	CAP COMP., FUEL FILLER	1		ED,G
		11	37800-MC7-008	FUEL UNIT (NIPPON SEIKI)	1		
		12	64225-MC7-000	RUBBER, R. TANK SIDE SEAL	1		
		13	64227-MC7-000	RUBBER, L. TANK SIDE SEAL	1		
		14	64229-MC7-000	APRON, FUEL TANK	1		
		15	64536-MC7-000	RUBBER, TANK SIDE SEAL	1		

G 16

F-16

Fuel tank

Réservoir d'essence

Benzintank

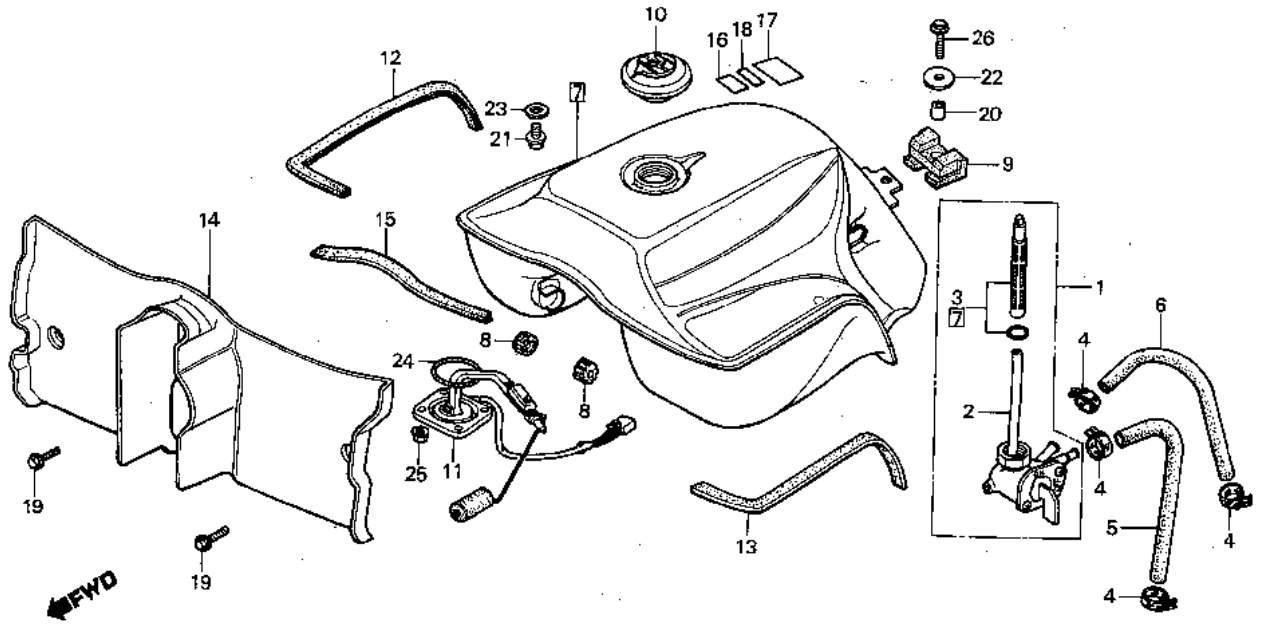

BMC7-36

Service item	F.R.T.	Ref. No.	Part No.	Description	Reqd. No. CX500TCc	Serial No.	Area code
		16	87517-445-630	LABEL, FR. FORK CAUTION	1		B,CM,E,ED,G,H,IT,SA,SW,U
			87517-445-730	LABEL, FR. FORK CAUTION (FRENCH)	1		CM,F
		17	87560-181-760ZA	MARK, DRIVE CAUTION *NH-1*	1		B,CM,E,ED,G,H,IT,SA,SW,U
			87560-463-830ZA	MARK, DRIVE CAUTION *NH-1* (FRENCH)	1		F
		18	87562-MC7-600	MARK, FUEL CAUTION	1		E,ED,G,IT,SA,U
			87562-MC7-620	MARK, FUEL CAUTION (FRENCH)	1		F
			87562-MC7-670	MARK, FUEL CAUTION	1		B,H,SW
		19	90111-187-000	BOLT, FLANGE, 6MM	2		
		20	90324-300-000	COLLAR, 8MM	1		
		21	90473-461-000	BOLT, FLANGE, 12X15	1		
		22	90534-011-000	WASHER, 8.3MM	1		
		23	90592-MC7-000	WASHER, SEALING, 12.5MM	1		
		24	91305-MC7-000	O-RING, 41X5	1		
		25	94050-06000-08	NUT, FLANGE, 6MM	4		
		26	95700-08025-08	BOLT, FLANGE, 8X25	1		

H 1

F-17

Seat • Rear cowl

Siege • Auvent arrière

Sitz • Hintere Verkleidung

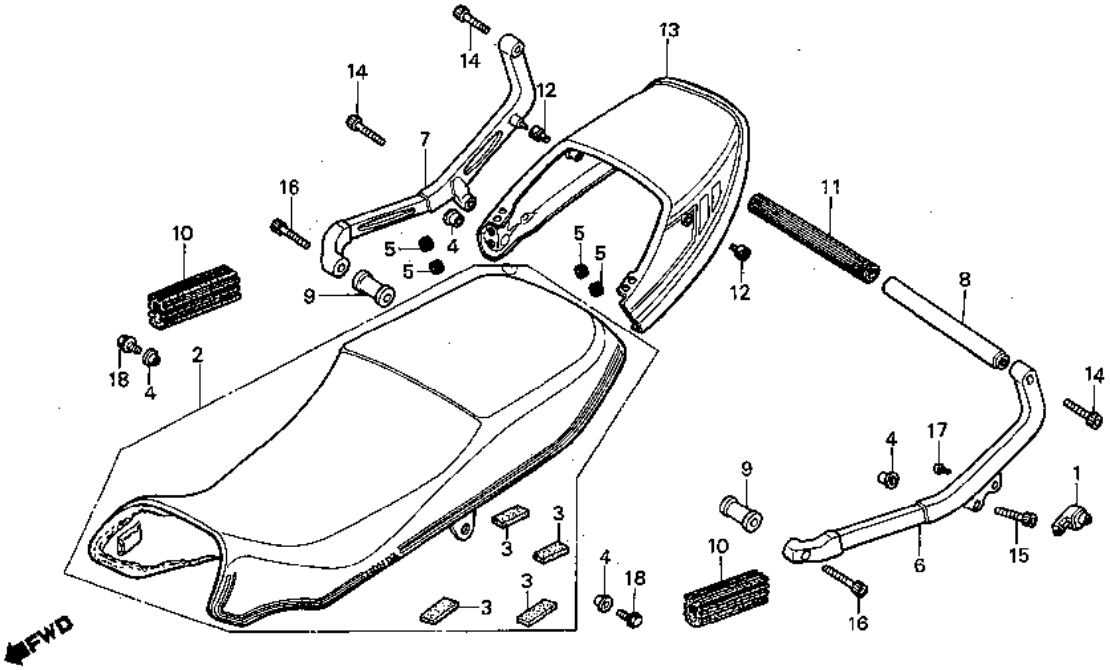

BMC7—37

Service item	F.R.T.	Ref. No.	Part No.	Description	Reqd. No. CX500TCc	Serial No.	Area code
HOLDER ASSY., HELMET	0.1	1	50710-MC7-003	HOLDER ASSY., HELMET	1		B,CM,E,F,H,IT,SA,SW,U
.HOLDER ASSY., HELMET			50710-MC7-611	HOLDER ASSY., HELMET	1		ED,G
.GRIP, R. RR.		2	77200-MC7-000	SEAT COMP., DOUBLE	1		
GRIP, L. RR.	0.2	3	77204-312-000	RUBBER, SEAT SETTING	4		
.COWL SUB ASSY., RR		4	83515-428-000	COLLAR, TOOL BOX	4		
		5	83551-240-300	GROMMET, AIR CLEANER CASE	4		
		6	83601-MC7-000	GRIP, L. RR.	1		
		7	83602-MC7-000	GRIP, R. RR.	1		
		8	83603-MC7-000	GRIP, RR. CROSS	1		
		9	83604-MC7-000	COLLAR, GRIP SIDE	2		
		10	83605-MC7-000	RUBBER A, GRIP	2		
		11	83606-MC7-000	RUBBER B, RR. GRIP	1		
		12	83607-MC7-000	CAP, RR. GRIP COWL	2		
		13	83910-MC7-000ZA	COWL SUB ASSY., RR #NH-113P-A#	1		
		14	90116-125-782	BOLT, SOCKET, 8MM	3		
		15	90116-355-000	BOLT, SOCKET	1		
		16	90166-MC7-000	BOLT, SOCKET, 8X58	2		
		17	93500-06012-0G	SCREW, PAN, 6X12	1		
		18	95700-08014-08	BOLT, FLANGE, 8X14	2		

H 2

F-18

Side cover • Battery

Couvercle latéral • Battery

Seitendeckel • Batterie

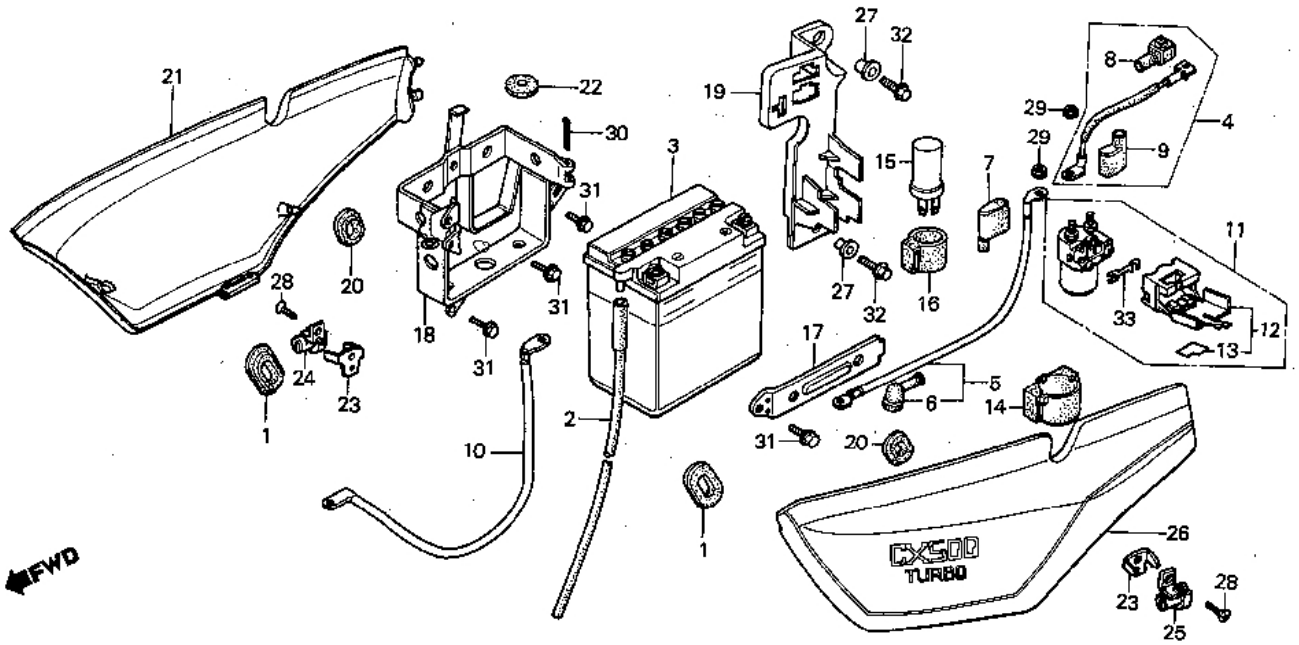

8MC7-38

Service item	F.R.T.	Ref. No.	Part No.	Description	Reqd. No. CX500TCc	Serial No.	Area code
BATTERY	0.2	1	17247-303-000	GROMMET A, AIR CLEANER CASE	2		
.CABLE, STARTER MOTOR		2	31502-MA1-000	TUBE, BATTERY BREATHER	1		
.CABLE, BATTERY EARTH		3	31500-461-780	BATTERY (12V14)	1		
.SWITCH ASSY., STARTER MAGNETIC		4	32401-MA1-730	CABLE, STARTER BATTERY	1		
.BOX COMP., BATTERY		5	32410-MA1-000	CABLE, STARTER MOTOR	1		
.PLATE, ELECTRIC							
CABLE, STARTER BATTERY	0.1	6	32411-253-000	COVER, STARTING MOTOR TERMINAL	1		
.COVER SUB ASSY., SIDE		7	32412-426-000	COVER, MAGNETIC SWITCH TERMINAL	1		
		8	32414-MA1-730	COVER, TERMINAL	1		
		9	32416-460-000	COVER B, MAGNETIC SWITCH	1		
		10	32601-MC7-000	CABLE, BATTERY EARTH	1		
		11	35850-425-017	SWITCH ASSY., STARTER MAGNETIC	1		
		12	35852-425-017	COVER, FUSE	1		
		13	35853-425-300	LABEL, FUSE COVER	1		
		14	35856-425-000	RUBBER, MAGNETIC SHOCK	1		
		15	38301-404-612	RELAY COMP., WINKER (MITSUBA)	1		G
			38301-415-004	RELAY COMP., WINKER (MITSUBA)	1		B,CM,E,ED,F,H,IT,SA,SW,U
		16	38306-292-000	SUSPENSION, WINKER RELAY	1		

H 3

F-18

Side cover • Battery

Couvercle latéral • Batterie

Seitendeckel • Batterie

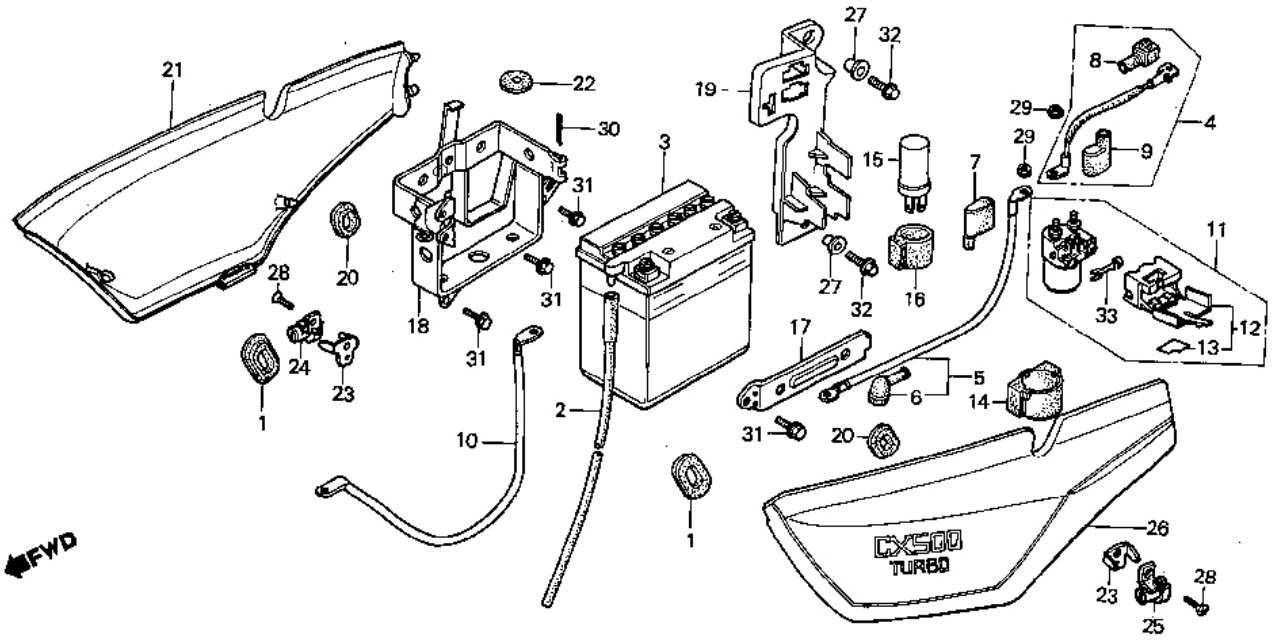

BMC7—38

Service item	F.R.T.	Ref. No.	Part No.	Description	Reqd. No. CX500TCc	Serial No.	Area code
		17	50330-MC7-000	BAND COMP. B	1		
		18	50332-MC7-000	BOX COMP., BATTERY	1		
		19	50340-MC7-000	PLATE, ELECTRIC	1		
		20	83551-300-000	GROMMET, AIR CLEANER CASE	2		
		21	83610-MC7-000ZA	COVER SUB ASSY., R. SIDE *NH-113P-A*	1		
		22	83618-323-000	RUBBER, BATTERY BOX	6		
		23	83704-MC7-000	GUAIDE, SIDE COVER LOCK	2		
		24	83705-MC7-000	LOCK ASSY., R. SIDE COVER	1		B,CM,E,F,H,IT,SA,SW,U
			83705-MC7-610	LOCK ASSY., R. SIDE COVER	1		ED,G
		25	83706-MC7-000	LOCK ASSY., L. SIDE COVER	1		B,CM,E,F,H,IT,SA,SW,U
			83706-MC7-610	LOCK ASSY., L. SIDE COVER	1		ED,G
		26	83710-MC7-000ZA	COVER SUB ASSY., L. SIDE *NH-113P-A*	1		
		27	90121-102-000	COLLAR B, AIR CLEANER CASE SETTING	2		
		28	93600-06015-0A	SCREW, FRAT, 6X15	2		
		29	94050-06080	NUT, FLANGE, 6MM	2		
		30	94201-30400	PIN, SPLIT, 3.0X40	1		

H 4

F-18

Side cover • Battery

Couvercle latéral • Batterie

Seitendeckel • Batterie

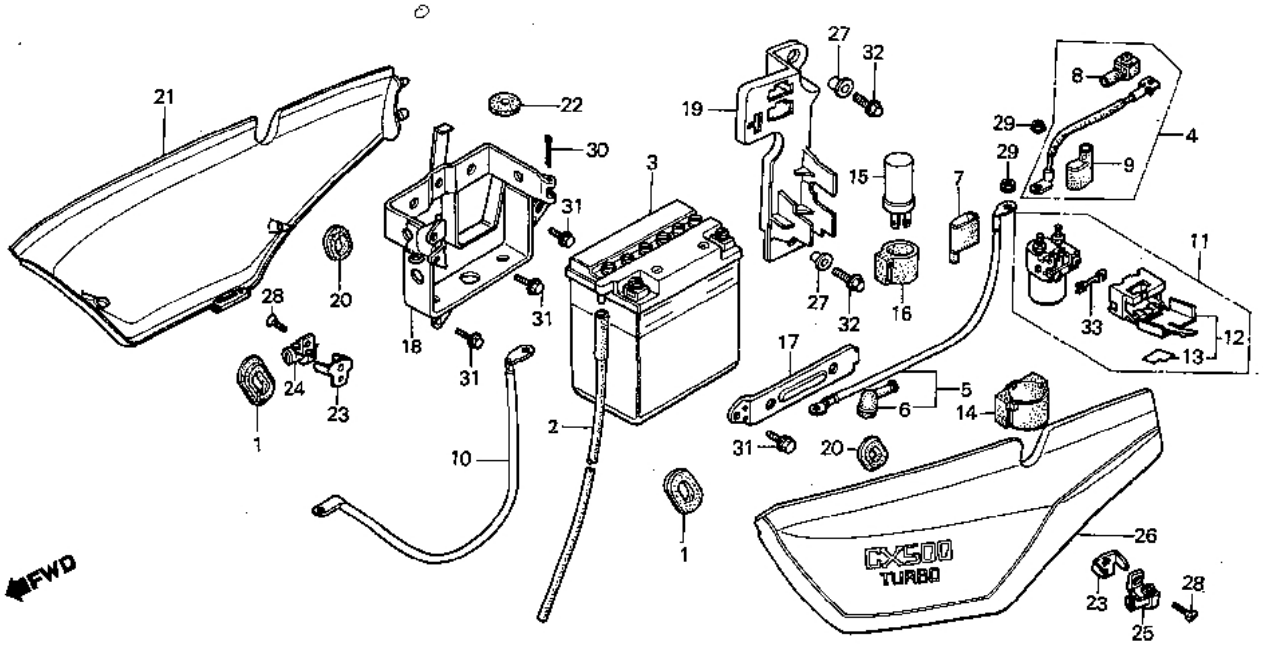

8MC7-38

Service item	F.R.T.	Ref. No.	Part No.	Description	Reqd. No. CX500TCc	Serial No.	Area code
		31	95700-06010-00	BOLT, FLANGE, 6X10	4		
		32	95700-06014-00	BOLT, FLANGE, 6X14	2		
		33	98200-53000	FUSE F (30A)	2		

H 5

F-19

Spark unit • Sensor

Unité d'allumage • Transmetteur

Zündeinheit • Sensor

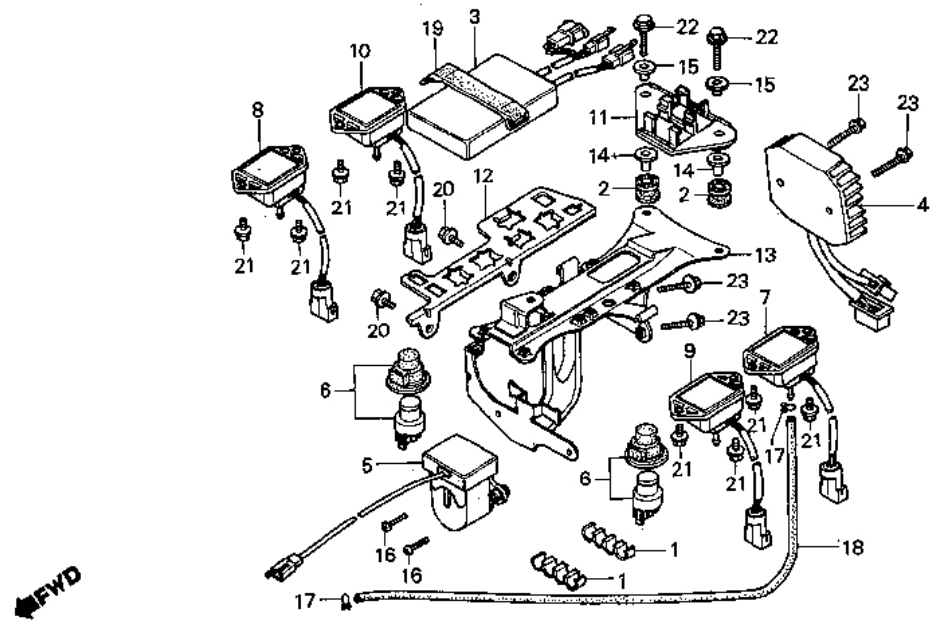

Service item	F.R.T.	Ref. No.	Part No.	Description	Reqd. No. CX500TCc	Serial No.	Area code
SPARK UNIT	0.3	1	16961-MC7-000	CLIP, SENSOR TUBE	2		
.RELAY, MAIN		2	17245-107-010	RUBBER, AIR CLEANER CASE MOUNTING	2		
RECTIFIER ASSY., REGULATOR	0.6						
.SENSOR ASSY., KILL		3	30400-MC7-005	SPARK UNIT	1		
SENSOR 1, PRESSURE	0.5	4	31600-MC7-000	RECTIFIER ASSY., REGULATOR	1		
.SENSOR 2, PRESSURE		5	35160-MC7-000	SENSOR ASSY., KILL	1		
.SENSOR, PRESSURE BOOST							
.SENSOR, PRESSURE IGNITION		6	36130-MC7-003	RELAY, MAIN	2		
STAY, COUPLER	0.2	7	36161-MC7-003	SENSOR 1, PRESSURE	1		
STAY, ELECTRIC	0.7	8	36171-MC7-003	SENSOR 2, PRESSURE	1		
		9	36181-MC7-003	SENSOR, PRESSURE BOOST	1		
		10	36191-MC7-000	SENSOR, PRESSURE IGNITION	1		
		11	50324-MC7-000	STAY, COUPLER IGNITION	1		
		12	50326-MC7-000	STAY, COUPLER	1		
		13	50327-MC7-000	STAY, ELECTRIC	1		
		14	61104-428-000	COLLAR, FR. FENDER	2		
		15	80112-443-850	COLLAR	2		
		16	93500-04018-0A	SCREW, PAN, 4X18	2		
		17	95002-02070	CLIP B7, TUBE	2		
		18	95005-35940-21	TUBE, 3.5X940	1		
		19	95012-13000	BAND B2, BATTERY	1		
		20	95700-06010-00	BOLT, FLANGE, 6X10	2		
		21	95700-06012-00	BOLT, FLANGE, 6X12	8		
		22	95700-06022-00	BOLT, FLANGE, 6X22	2		

1981.10.20 E H5

H 6

F-19

Spark unit • Sensor

Unité d'allumage • Transmetteur

Zündeinheit • Sensor

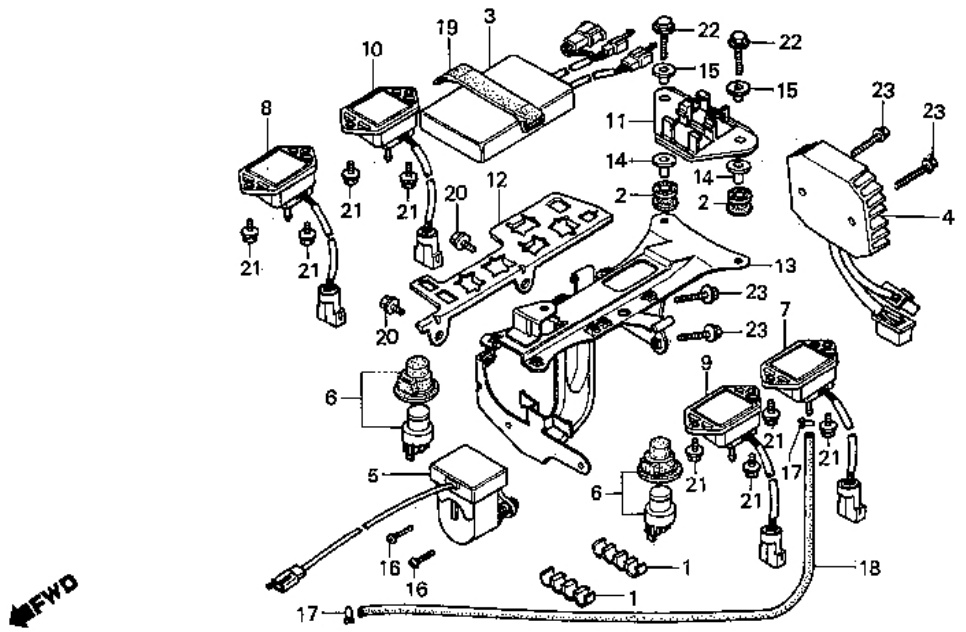

Service item	F.R.T.	Ref. No.	Part No.	Description	Reqd. No. CX500TCc	Serial No.	Area code
		23	95700-06035-00	BOLT, FLANGE, 6X35	4		

H 7

F-20

Air cleaner

Filtre à air

Luftfilter

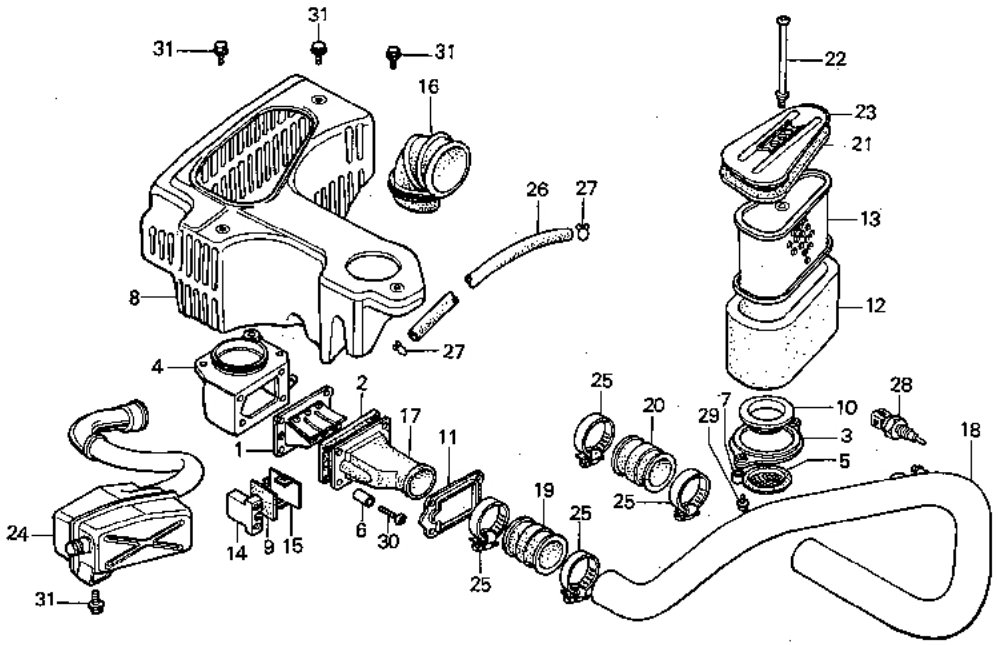

BMC7-40

Service item	F.R.T.
VALVE ASSY., REED	0.6
CHAMBER, REED VALVE	0.5
JOINT, AIR CLEANER CASE	
CASE COMP., AIR CLEANER	0.8
ELEMENT ASSY., AIR CLEANER	0.2
INC. RELATIVE PART	
TUBE, AIR CLEANER CONNECTING	1.2
COVER, AIR CLEANER	0.1
CHAMBER, RESONANCE	2.3
SENSOR, AIR TEMP	0.3

Ref. No.	Part No.	Description	Reqd. No. CX500TCc	Serial No.	Area code
1	14200-MC7-000	VALVE ASSY., REED	1		
2	14203-MC7-000	PACKING, REED VALVE	1		
3	17202-MC7-000	RING, REED VALVE	1		
4	17203-MC7-000	CHAMBER, REED VALVE	1		
5	17204-MC7-000	NET, AIR CLEANER	1		
6	17207-MC7-000	COLLAR	4		
7	17208-MC7-000	COLLAR B	2		
8	17210-MC7-000	CASE COMP., AIR CLEANER	1		
9	17211-MC7-000	PACKING, SILENSER	1		
10	17212-MC7-000	PACKING, AIR CLEANER ELEMENT	1		
11	17213-MC7-000	HOLDER, REED VALVE	1		
12	17215-MC7-000	ELEMENT ASSY., AIR CLEANER	1		
13	17216-MC7-000	TRAP COMP., FRAME	1		
14	17218-MC7-000	CHAMBER, SILENCER	1		
15	17219-MC7-000	CAP, SILENCER	1		
16	17221-MC7-000	DUCT, AIR CLEANER	1		
17	17222-MC7-000	JOINT, AIR CLEANER CASE	1		
18	17223-MC7-000	TUBE, AIR CLEANER CONNECTING	1		
19	17224-MC7-000	JOINT, CONNECTING TUBE	1		
20	17225-MC7-000	JOINT B, CONNECTING TUBE	1		
21	17226-MC7-000	PACKING, AIR CLEANER CASE	1		

H 8

F-20

Air cleaner

Filtre à air

Luftfilter

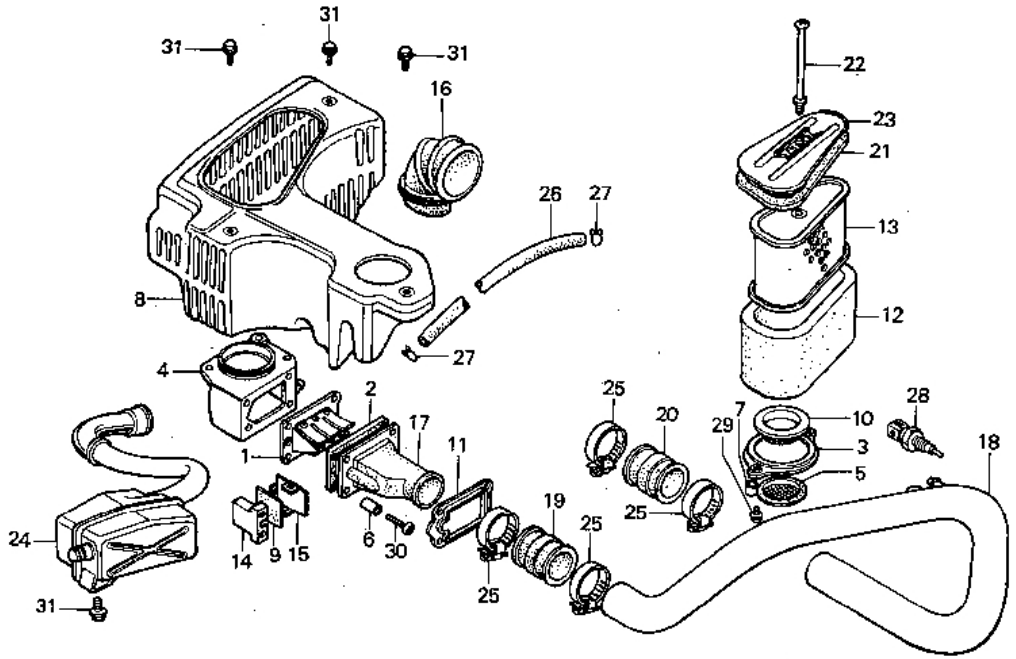

BMC7-40

Service item	F.R.T.	Ref. No.	Part No.	Description	Reqd. No. CX500TCc	Serial No.	Area code
		22	17228-MC7-000	BOLT, AIR CLEANER ELEMENT	1		
		23	17229-MC7-000	COVER, AIR CLEANER	1		
		24	17230-MC7-000	CHAMBER, RESONANCE	1		
		25	17256-MC7-000	BAND, AIR CLEANER TUBE	4		
		26	17358-MC7-000	TUBE, BREATHER	1		
		27	18534-634-670	CLIP, AIR HOSE, 16	2		
		28	36152-MC7-003	SENSOR, TEMP AIR	1		
		29	93893-04016-08	SCREW-WASHER, 4X16	2		
		30	93893-04020-08	SCREW-WASHER, 4X20	4		
		31	95700-06010-00	BOLT, FLANGE, 6X10	4		

H 9

F-21

Exhaust muffler

Pot d'échappement

Auspufftopf

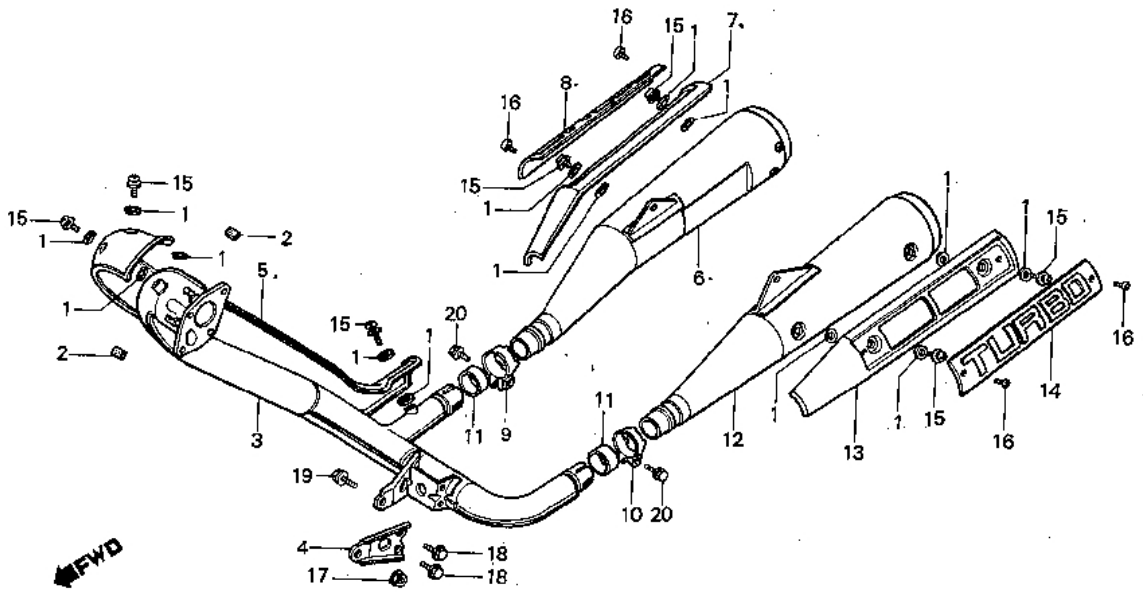

BMC7-41

Service item	F.R.T.	Ref. No.	Part No.	Description	Reqd. No. CX500TCc	Serial No.	Area code
PIPE COMP., EX.	0.6	1	18292-415-000	PACKING, PROTECTOR	14		
PROTECTOR COMP., EX. PIPE	0.4	2	18293-147-000	RUBBER, PROTECTOR PACKING	2		
MUFFLER COMP.	0.1	3	18320-MC7-000	PIPE COMP., EX.	1		
INC. RELATIVE PART		4	18322-MC7-000	STAY, EX. PIPE	1		
		5	18325-MC7-000	PROTECTOR COMP., EX. PIPE	1		
		6	18330-MC7-000	MUFFLER COMP., R.	1		
		7	18335-MC7-000	PROTECTOR, R. MUFFLER	1		
		8	18336-MC7-000	EMBLEM, R. MUFFLER PROTECTOR	1		
		9	18375-MC7-000	BAND, R. RR. MUFFLER	1		
		10	18376-MC7-000	BAND, L. RR. MUFFLER	1		
		11	18392-413-000	PACKING, RR. MUFFLER	2		
		12	18430-MC7-000	MUFFLER COMP., L.	1		
		13	18435-MC7-000	PROTECTOR, L. MUFFLER	1		
		14	18436-MC7-000	EMBLEM, L. MUFFLER PROTECTOR	1		
		15	90136-MC7-000	SCREW-WASHER, 6X12	7		
		16	93700-04008-16	SCREW, OVAL, 4X8	4		
		17	94050-08080	NUT, FLANGE, 8MM	1		
		18	95700-08016-08	BOLT, FLANGE, 8X16	2		
		19	95700-08035-08	BOLT, FLANGE, 8X35	1		
		20	95700-08040-00	BOLT, FLANGE, 8X40	2		

H 10

F-22

Brake pedal • Change pedal

Pédale de frein •
Pédale de changement

Bremspedal • Schaltpedal

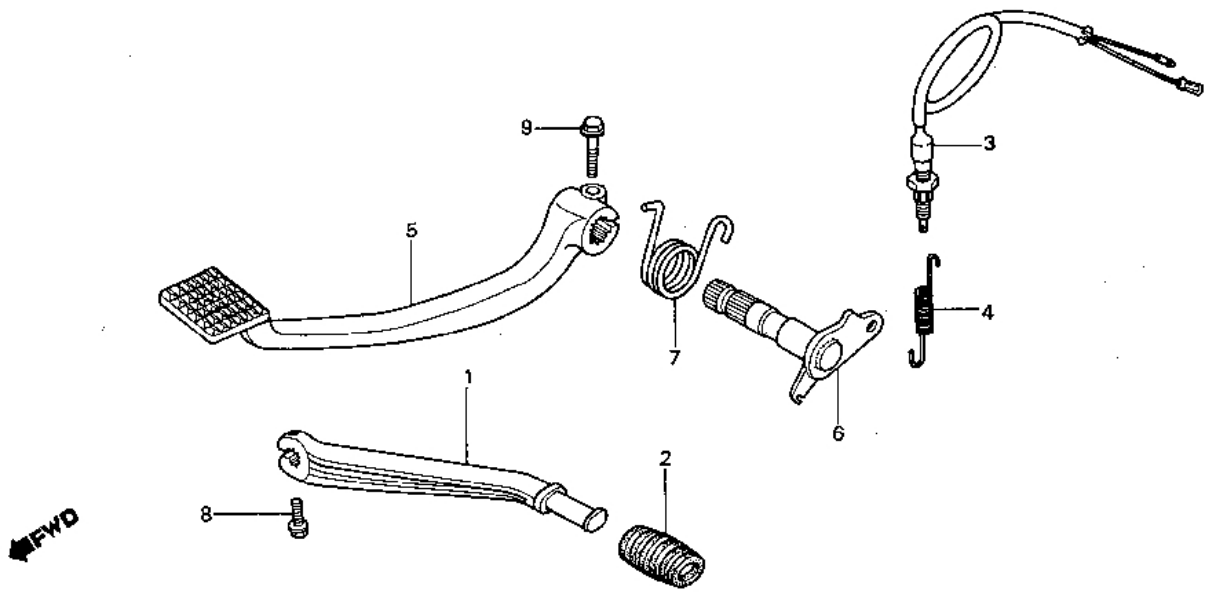

BMC7—42

Service item	F.R.T.
PEDAL, GEAR CHANGE	0.1
•PEDAL, BRAKE	
SWITCH ASSY., RR. STOP	0.2
•SPINDLE COMP., RR. BRAKE	

Ref. No.	Part No.	Description	Reqd. No. CX500TCc	Serial No.	Area code
1	24701-MC7-000	PEDAL, GEAR CHANGE	1		
2	24781-MC7-000	RUBBER, GEAR CHANGE PEDAL	1		
3	35350-415-000	SWITCH ASSY., RR. STOP	1		
4	35357-MA1-000	SPRING, STOP SWITCH	1		
5	46500-MC7-000	PEDAL, BRAKE	2		
6	46510-MC7-000	SPINDLE COMP., RR. BRAKE	1		
7	46514-MC7-000	SPRING, BRAKE PEDAL	1		
8	95700-06022-08	BOLT, FLANGE, 6X22	1		
9	95700-06028-00	BOLT, FLANGE, 6X28	1		

H 11

F-23

Step

Repose pieds

Tritt

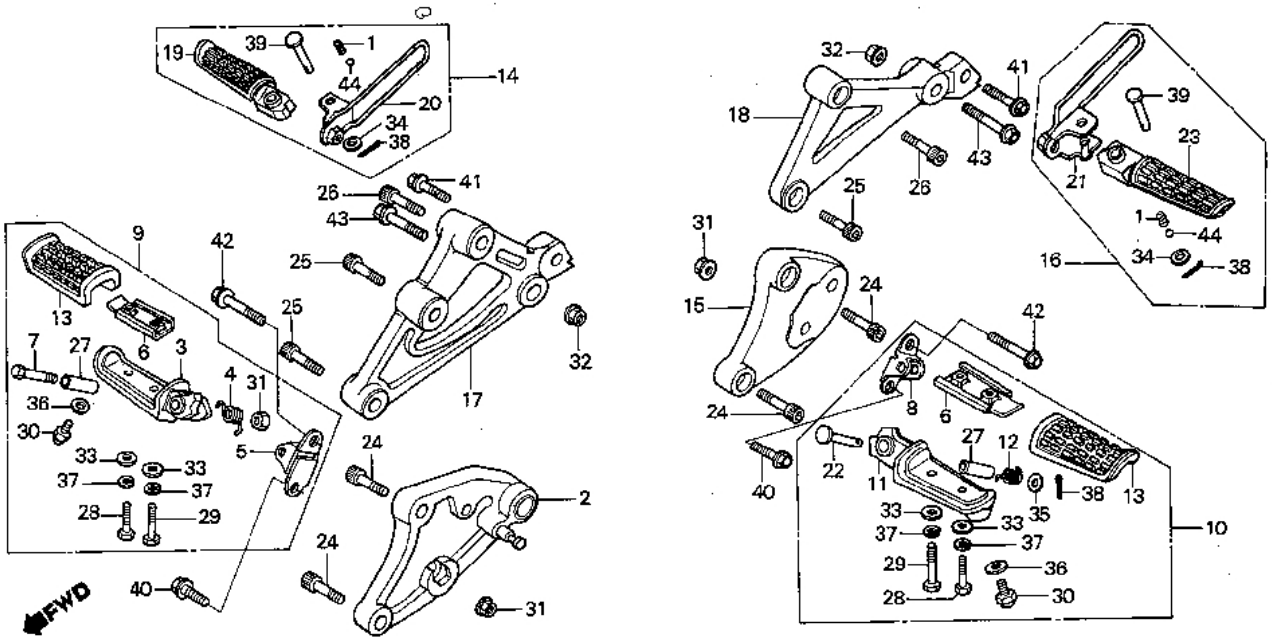

BMC7-43

Service item	F.R.T.	Ref. No.	Part No.	Description	Reqd. No. CX500TCc	Serial No.	Area code
HOLDER, R. STEP	0.3	1	28333-300-000	SPRING, KICK STARTER STOPPER	2		
ARM, STEP	0.1	2	50601-MC7-000	HOLDER, R. STEP	1		
INC. RELATIVE PART		3	50612-445-840	ARM, R. STEP	1		
.STEP ASSY., MAIN		4	50617-445-840	SPRING, STEP RETURN	1		
.BRACKET, PILLION STEP		5	50618-445-840	BRACKET, R. STEP	1		
INC. RELATIVE PART							
HOLDER, L. STEP	0.2	6	50619-MC7-000	PLATE, STEP STOPPER	2		
		7	50621-438-000	BOLT, STEP ARM PIVOT	1		
		8	50628-445-840	BRACKET, L. STEP	1		
		9	50630-MC7-000	STEP ASSY., R. MAIN	1		
		10	50640-MC7-000	STEP ASSY., L. MAIN	1		
		11	50642-445-840	ARM, L. STEP	1		
		12	50644-445-840	SPRING, L. STEP RETURN	1		
		13	50661-425-700	RUBBER, STEP	2		
		14	50700-MC7-000	STEP ASSY., R. PILLION	1		
		15	50701-MC7-000	HOLDER, L. STEP	1		
		16	50705-MC7-000	STEP ASSY., L. PILLION	1		
		17	50711-MC7-000	BRACKET, R. PILLION STEP	1		
		18	50712-MC7-000	BRACKET, L. PILLION STEP	1		
		19	50714-MC7-000	ARM COMP., R. PILLION STEP	1		
		20	50715-MC7-000	BRACKET, R. PILLION STEP	1		

H 12

F-23

Step

Repose pieds

Tritt

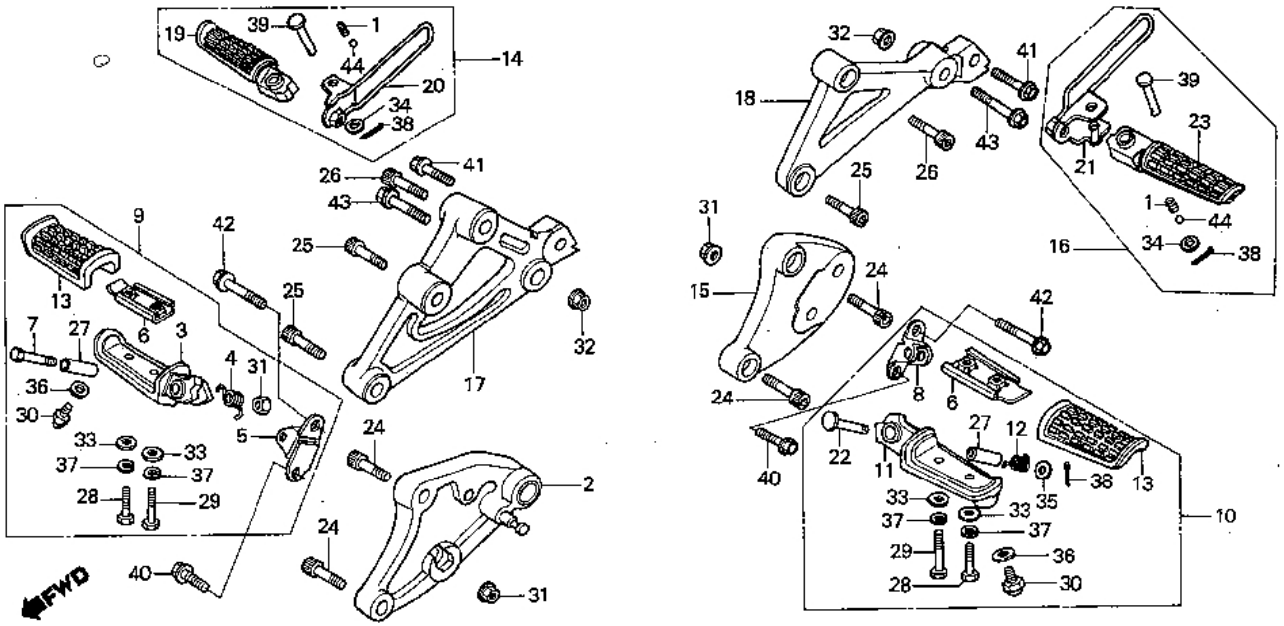

8MC7-43

Service item	F.R.T.	Ref. No.	Part No.	Description	Reqd. No. CX500TCc	Serial No.	Area code
		21	50716-MC7-000	BRACKET, L. PILLION STEP	1		
		22	50716-438-000	PIN, STEP BAR JOINT	1		
		23	50717-MC7-000	ARM COMP., L. PILLION STEP	1		
		24	90116-MC7-000	BOLT, SOCKET, 8X28	4		
		25	90117-MC7-000	BOLT, SOCKET, 8X40	3		
		26	90125-MC7-000	BOLT, SOCKET, 8X45	2		
		27	90501-445-840	COLLAR, STEP PIVOT	2		
		28	92000-05025-0A	BOLT, HEX., 5X25	2		
		29	92000-05028-0A	BOLT, HEX., 5X28	2		
		30	92500-08012-0A	BOLT, CAP, 8X12	2		
		31	94002-08000-0S	NUT, HEX., 8MM	3		
		32	94050-10080	NUT, FLANGE, 10MM	2		
		33	94101-05000	WASHER, PLAIN, 5MM	4		
		34	94101-06000	WASHER, PLAIN, 6MM	2		
		35	94101-08000	WASHER, PLAIN, 8MM	1		
		36	94102-08000	WASHER, PLAIN, 8MM	2		
		37	94111-05000	WASHER, SPRING, 5MM	4		
		38	94201-16150	PIN, SPLIT, 1.6X15	3		
		39	95015-82000	PIN B, PILLION STEP	2		
		40	95700-08020-00	BOLT, FLANGE, 8X20	2		
		41	95700-08032-00	BOLT, FLANGE, 8X32	2		
		42	95700-08040-00	BOLT, FLANGE, 8X40	2		
		43	95700-10040-00	BOLT, FLANGE, 10X40	2		

1981.10.20 E H12

H 13

F-23

Step

Repose pieds

Tritt

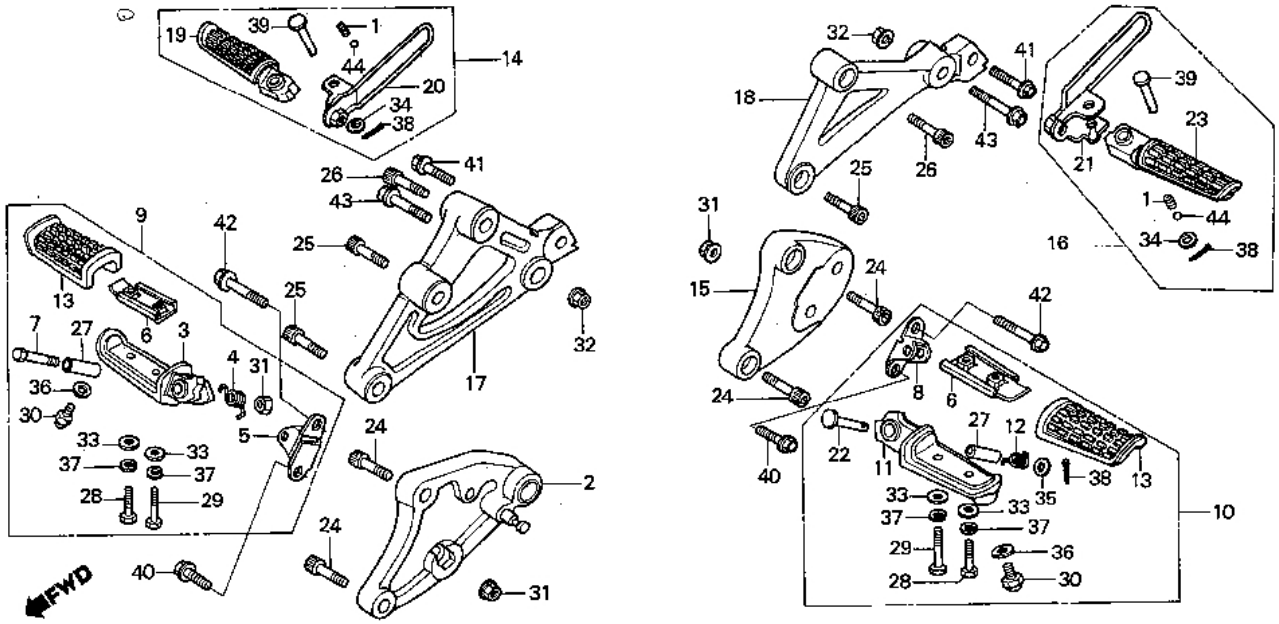

BMC7-43

Service item	F.R.T.	Ref. No.	Part No.	Description	Reqd. No. CX500TCc	Serial No.	Area code
		44	96211-08000	BALL, STEEL, #8 (1/4)	2		

H 14

F-24

Stand

Bequille

Ständer

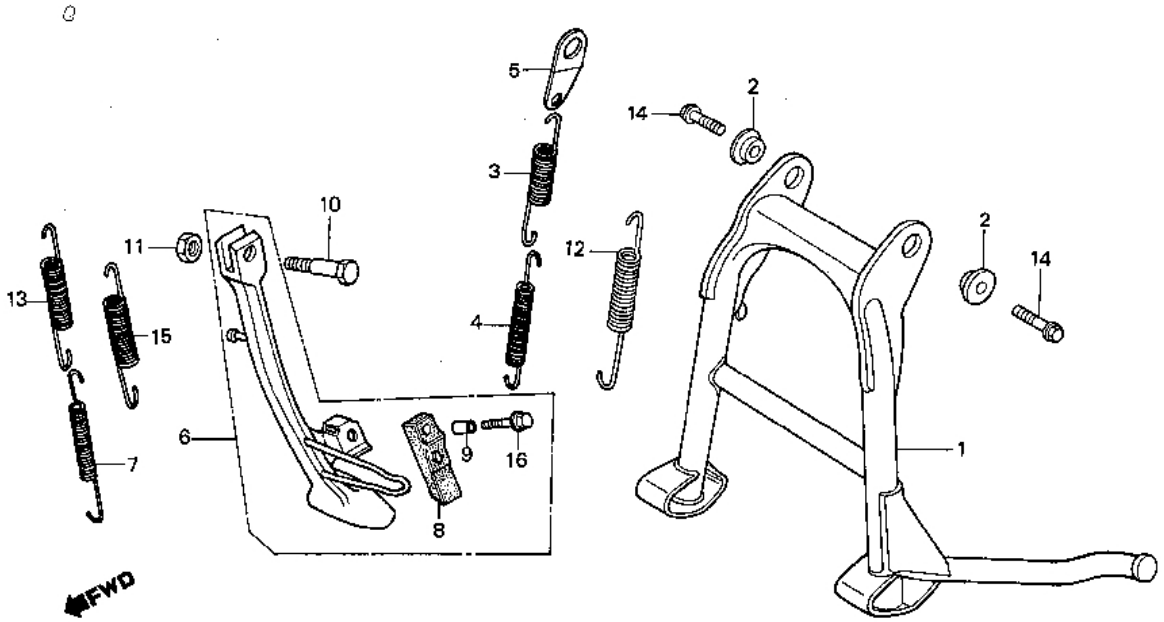

BMC7-44

Service item	F.R.T.
STAND COMP., MAIN	0.5
SPRING, MAIN STAND	0.2
.STAND ASSY., SIDE	
SPRING A, SIDE STAND	0.1

Ref. No.	Part No.	Description	Reqd. No. CX500TCc	Serial No.	Area code
1	50500-MC7-000	STAND COMP., MAIN	1		
2	50503-MA1-000	COLLAR, MAIN STAND	2		
3	50510-413-610	SPRING, MAIN STAND	1		G
4	50520-413-610	SUB SPRING, MAIN STAND	1		G
5	50523-415-610	PLATE, MAIN STAND SPRING	1		G
6	50540-MC7-000	STAND ASSY., SIDE	1		
7	50542-438-000	SUB SPRING, SIDE STAND	1		G
8	50548-356-700	RUBBER, STAND	1		
9	50549-356-700	COLLAR, STAND RUBBER SETTING	1		
10	90108-223-000	SCREW, SIDE STAND PIVOT	1		
11	94031-10000	NUT, HEX., 10MM	1		
12	95014-71902	SPRING J, MAIN STAND	1		B,CM,E,ED,F,H,IT,SA,SW,U
13	95014-72102	SPRING A, SIDE STAND	1		G
14	90119-671-000	BOLT, FR. RADIUS ROD	2		
15	95014-72402	SPRING D, SIDE STAND	1		B,CM,E,ED,F,H,IT,SA,SW,U
16	95700-06028-00	BOLT, FLANGE, 6X28	1		

H 15

F-25

Rear fork

Fourche arrière

Hintere Schwinge

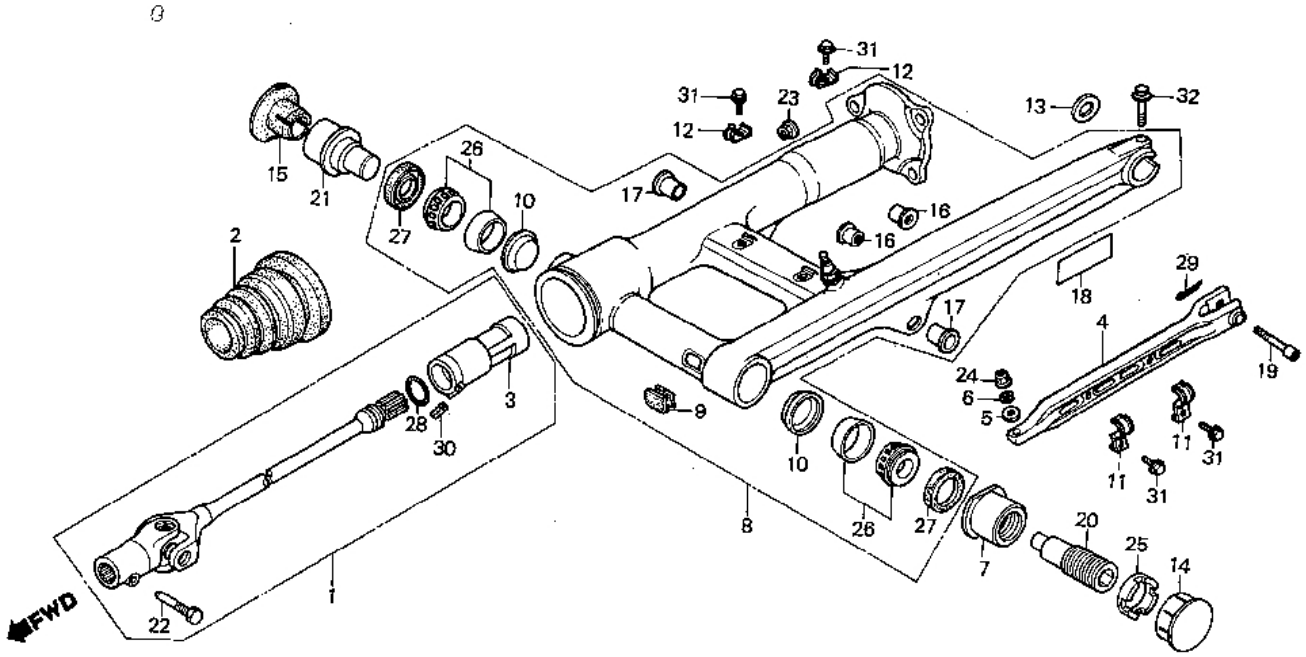

Service item	F.R.T.	Ref. No.	Part No.	Description	Reqd. No. CX500TCc	Serial No.	Area code
SHAFT COMP., PROPELLER	1.3	1	40200-MC7-000	SHAFT COMP., PROPELLER	1		
.NUT, FORK PIVOT		2	40207-MC7-000	BOOT, JOINT	1		
ARM, RR. BRAKE STOPPER	0.2	3	40210-415-000	JOINT, PROPELLER SHAFT	1		
FORK ASSY., RR.	1.5	4	43431-MC7-000	ARM, RR. BRAKE STOPPER	1		
.BEARING, 30203J		5	43432-461-000	WASHER, RR. BRAKE STOPPER ARM	1		
(ONE OR ALL)							
BOLT, PIVOT	0.1	6	43434-286-000	RUBBER, STOPPER ARM CUSHION	1		
		7	50197-MA1-300	NUT, FORK PIVOT	1		
		8	52110-MC7-000	FORK ASSY., RR.	1		
		9	52111-MC7-000	CAP, RR. FORK DUST	1		
		10	52112-MA1-300	HOLDER, RR. FORK GREASE	2		
		11	52114-MC7-000	CLAMPER A, RR. BRAKE HOSE	2		
		12	52115-MC7-000	CLAMPER B, RR. BRAKE HOSE	2		
		13	52116-MC7-000	WASHER, PLAIN, 1.7MM	1		
		14	52117-MA1-000	CAP, RR. FORK PIVOT	1		
		15	52117-MC7-000	CAP, RR. FORK PIVOT	1		
		16	52468-MC7-300	NUT, COLLAR	2		
		17	52469-MC7-000	COLLAR, RR. FORK	1		
		18	87505-MC7-610	MARK, TIRE CAUTION	1		B,E,ED,G,H,IT,SW
			87505-MC7-620	MARK, TIRE CAUTION (FRENCH)	1		F
			87505-MC7-660	MARK, TIRE CAUTION	1		SA

H 16

F-25

Rear fork

Fourche arrière

Hintere Schwinge

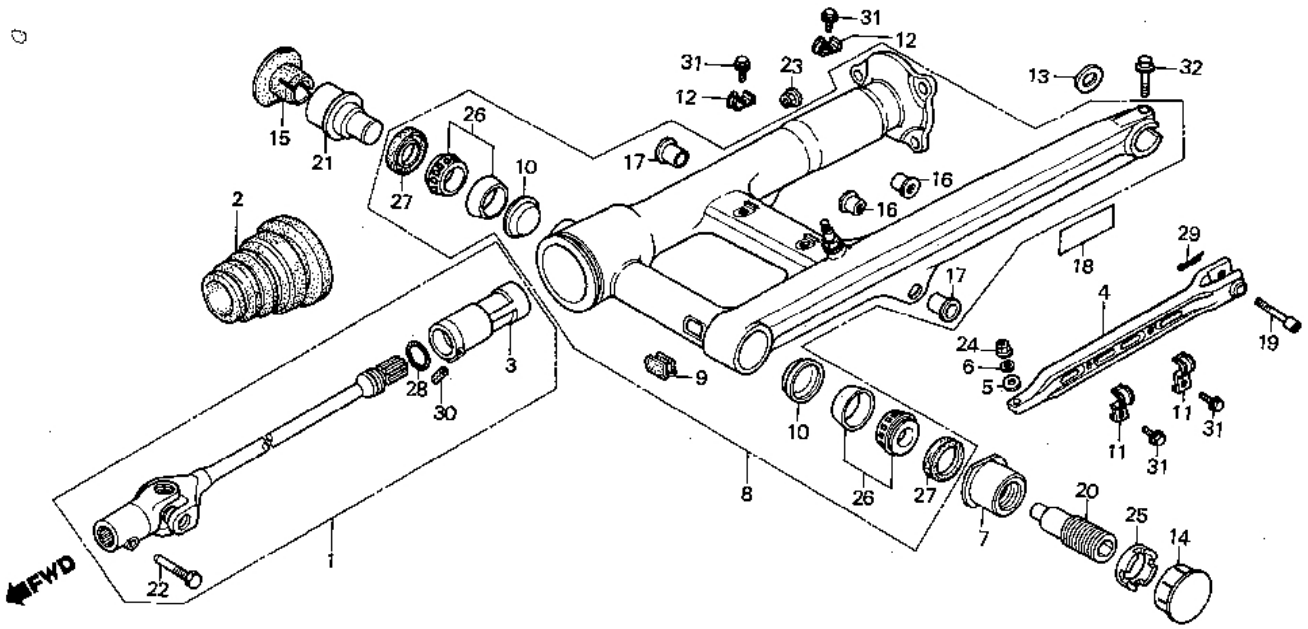

Service item	F.R.T.	Ref. No.	Part No.	Description	Reqd. No. CX500TCc	Serial No.	Area code
			87505-MC7-670	MARK, TIRE CAUTION	1		CM,U
			87505-MC7-720	MARK, TIRE CAUTION	1		CM
		19	90120-MC7-000	BOLT, BRAKE STOPPER ARM	1		
		20	90121-MA1-000	BOLT, PIVOT	1		
		21	90121-MC7-000	BOLT, R. RR. FORK PIVOT	1		
		22	90127-415-000	BOLT, SPECIAL, 8MM	1		
		23	90308-357-000	NUT, HEX., 10MM	3		
		24	90309-428-731	NUT, FLANGE, 8MM	1		
		25	90355-469-000	NUT, RR. FORK PIVOT	1		
		26	91066-MC7-003	BEARING, 30203J	2		
			91066-MC7-004	BEARING, 30203J	2		
		27	91268-463-003	DUST SEAL, 26X40X5	2		
		28	91359-415-300	O-RING, 22X1.7	1		
		29	94201-20150	PIN, SPLIT, 2.0X15	1		
		30	94305-40222	PIN, SPRING, 4X22	1		
		31	95700-06010-00	BOLT, FLANGE, 6X10	4		
		32	95700-08032-00	BOLT, FLANGE, 8X32	1		

I 1

F-26

Rear cushion

Amortisseur arrière

Hinterer Stoßdämpfer

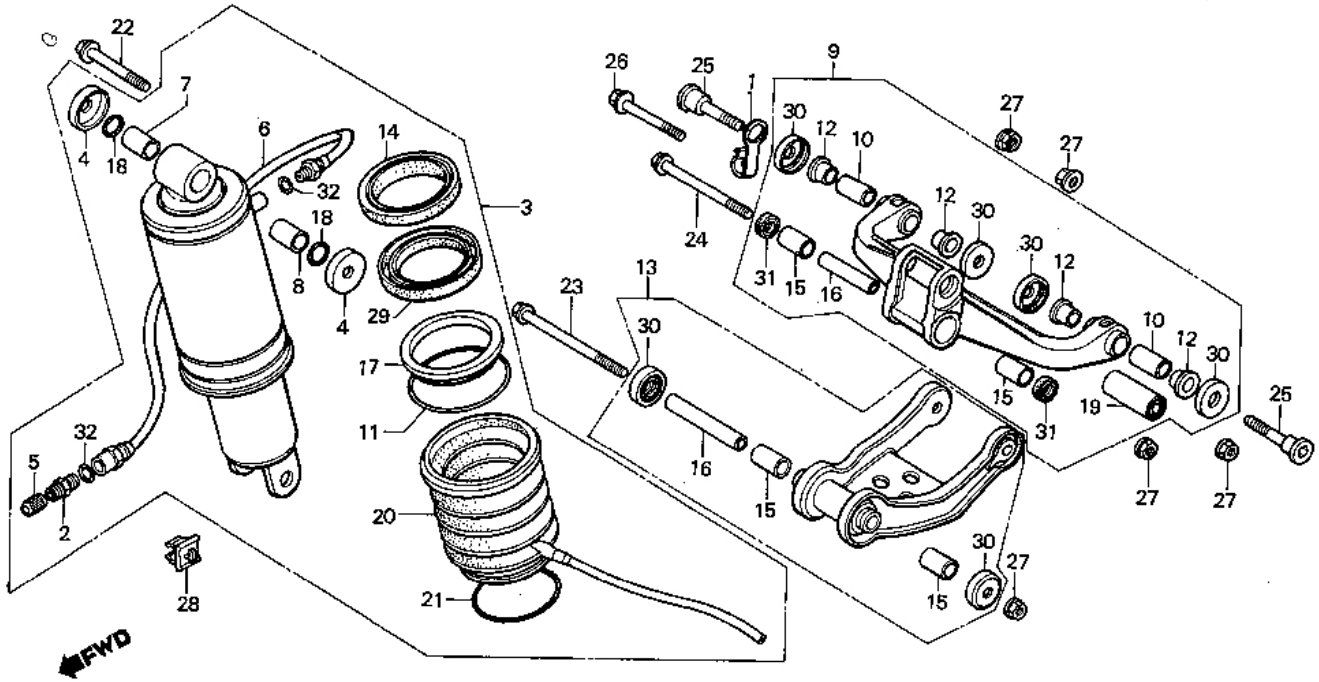

BMC7-46

Service item	F.R.T.
VALVE COMP., AIR	0.1
CUSHION ASSY., RR.	0.5
•ROD ASSY., CUSHION CONNECTING	
•BOOT COMP., CUSHION	
HOSE, RR. CUSHION	0.4
•ARM ASSY., CUSHION	
OIL SEAL, 65X80X10.5	1.0

Ref. No.	Part No.	Description	Reqd. No. CX500TCc	Serial No.	Area code
1	45156-MC7-000	CLAMP, OIL HOSE	1		
2	51456-469-013	VALVE COMP., AIR (SHOWA)	1		
3	52400-MC7-003	CUSHION ASSY., RR.	1		
4	52406-MC7-003	CAP	2		
5	52425-169-003	CAP, AIR VALVE (SHOWA)	1		
6	52432-MA1-003	HOSE, RR. CUSHION (SHOWA)	1		
7	52452-MA1-731	BUSH, METAL	1		
8	52453-MA1-731	COLLAR, BUSH	1		
9	52460-MC7-000	ARM ASSY., CUSHION	1		
10	52462-MA2-000	COLLAR, CONNECTING ROD PIVOT	2		
11	52463-MC7-003	RING B, STOPPER	1		
12	52465-MC7-300	BUSH, CONNECTING ROD	4		
13	52470-MC7-000	ROD ASSY., CUSHION CONNECTING	1		
14	52472-MC7-003	CASE, GUIDE	1		
15	52474-MA1-003	BUSH, CUSHION CONNECTING ROD	4		
16	52475-MA1-000	COLLAR, CONNECTING ROD	2		
17	52477-MC7-003	RING, BACK UP	1		
18	52478-MC7-003	O-RING, 14.5X1.5	2		
19	52485-MA2-003	BUSH, DAMPER	1		
20	52611-MC7-003	BOOT COMP., CUSHION	1		

I 2

F-26

Rear cushion

Amortisseur arrière

Hinterer Stoßdämpfer

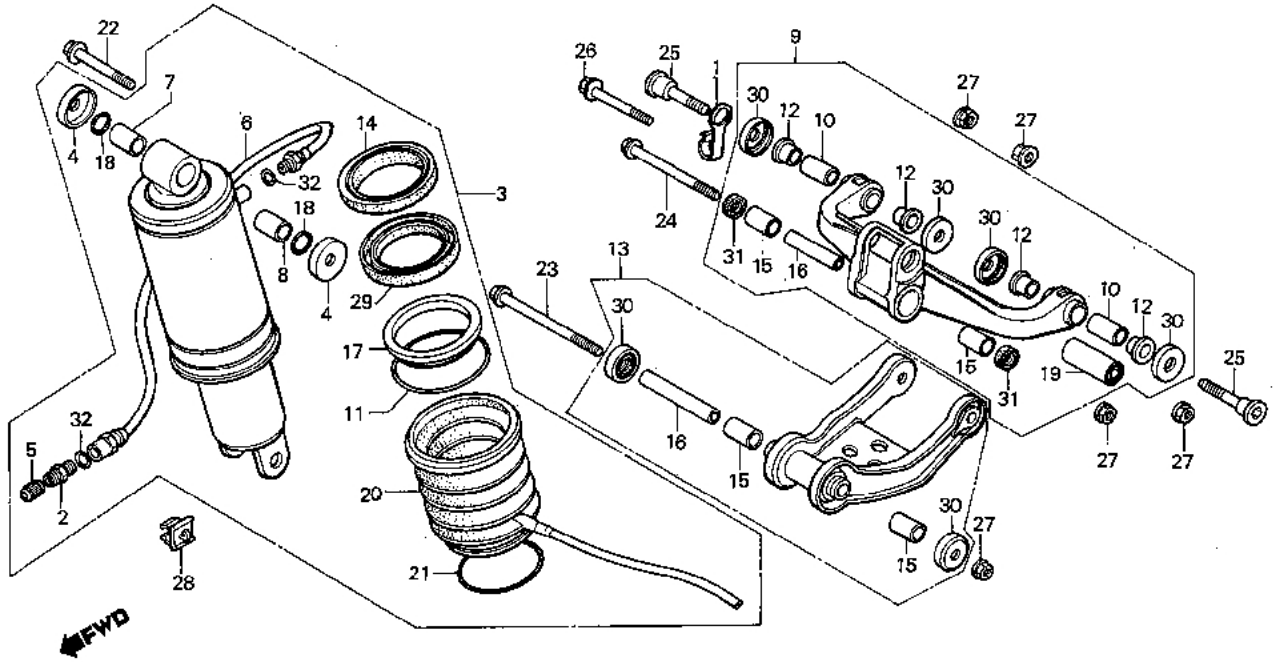

BMC7-46

Service item	F.R.T.	Ref. No.	Part No.	Description	Reqd. No. CX500TCc	Serial No.	Area code
		21	52612-MA2-003	BAND, BOOT	1		
		22	90152-MA1-000	BOLT, FLANGE, 10X64	1		
		23	90153-MA1-000	BOLT, UBS FLANGE, 10X100	1		
		24	90154-MA1-000	BOLT, UBS FLANGE, 10X96	1		
		25	90186-MC7-000	BOLT, CUSHION ARM	2		
		26	90189-MA2-000	BOLT D, FLANGE	1		
		27	90304-GA6-003	NUT, AXLE	5		
		28	90662-MA1-003	CLIP, HOSE	1		
		29	91257-MC7-003	OIL SEAL, 65X80X10.5	1		
		30	91262-MA0-013	SEAL, CUSHION CONNECTING ROD PIVOT	6		
			91262-MA0-015	SEAL, CUSHION CONNECTING ROD PIVOT	6		
		31	91262-MA1-005	DUST SEAL, CONNECTING ROD PIVOT	2		
		32	91301-469-003	O-RING, 5.8X1.9	2		

I 3

F-27

Rear fender

Garde-boue arrière

Hinterer Kotflügel

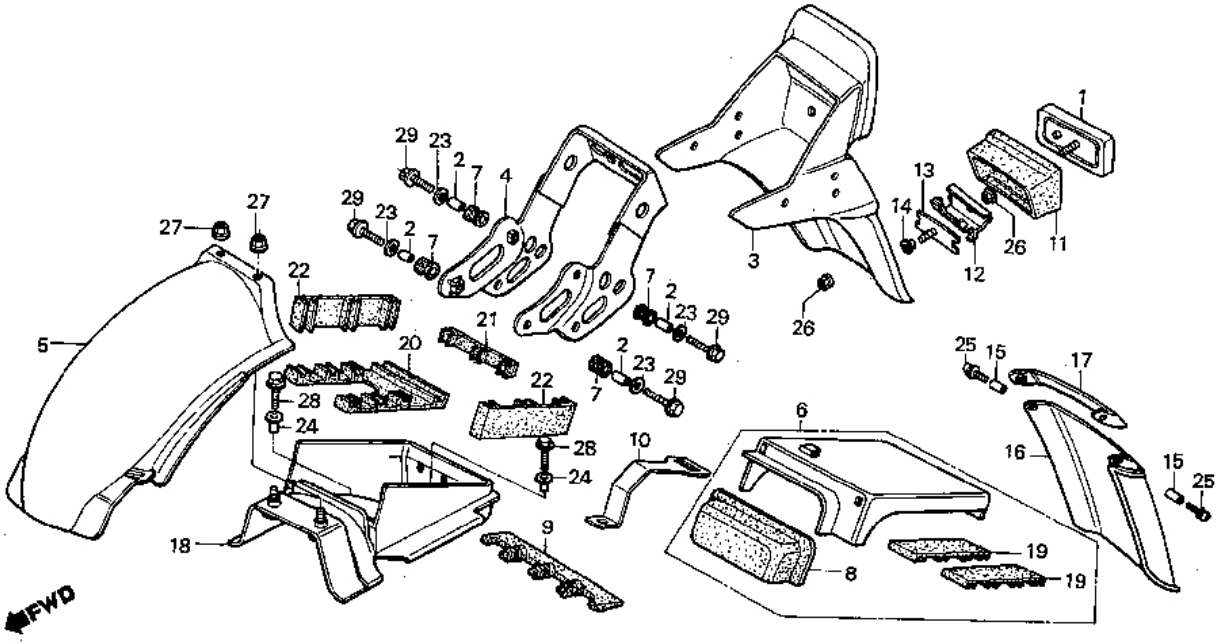

BMC7-47

Service item	F.R.T.
FENDER A, RR.	0.3
PLATE, TAILLIGHT	
FENDER B, RR.	0.4
BOX, ELECTRIC CONTROL UNIT	0.5

Ref. No.	Part No.	Description	Reqd. No. CX500TCc	Serial No.	Area code
1	33741-MC4-671	REFLEX, REFLECTOR (STANLEY)	1		
2	77112-397-770	COLLAR, SEAT LOCK	4		
3	80100-MC7-000	FENDER A, RR.	1		B,E,F,G,H,IT,SA,U
	80100-MC7-640	FENDER A, RR.	1		ED,SW
	80100-MC7-670	FENDER A, RR.	1		CM
4	80101-MC7-000	PLATE, TAILLIGHT	1		
5	80105-MC7-000	FENDER B, RR.	1		
6	80106-MC7-000	COVER, ELECTRIC CONTROL UNIT	1		
7	80106-028-010	CUSHION B, RR. FENDER	4		
8	80107-MC7-300	RUBBER, ELECTRIC CONTROL UNIT COVER	1		
9	80108-MC7-000	RUBBER, FENDER A ELECTRIC CONTROL UNIT	1		
10	80109-MC7-000	PLATE, ELECTRIC CONTROL UNIT COVER SETTING	1		
11	80111-MC7-000	BASE, RR. REFLECTOR	1		
12	80112-MC7-000	BRACKET, REFLECTOR RR.	1		
13	80113-MC7-000	PLATE, RR. REFLECTOR	1		
14	80114-MC7-000	COLLAR, RR. FENDER	1		
15	80115-MC7-640	COLLAR, RR. MUDGUARD	2		ED,SW
16	80121-MC7-640	MUDGUARD, RR. FENDER	1		ED,SW
17	80122-MC7-640	STAY, MUDGUARD	1		ED,SW

I 4

F-27

Rear fender

Garde-boue arrière

Hinterer Kotflügel

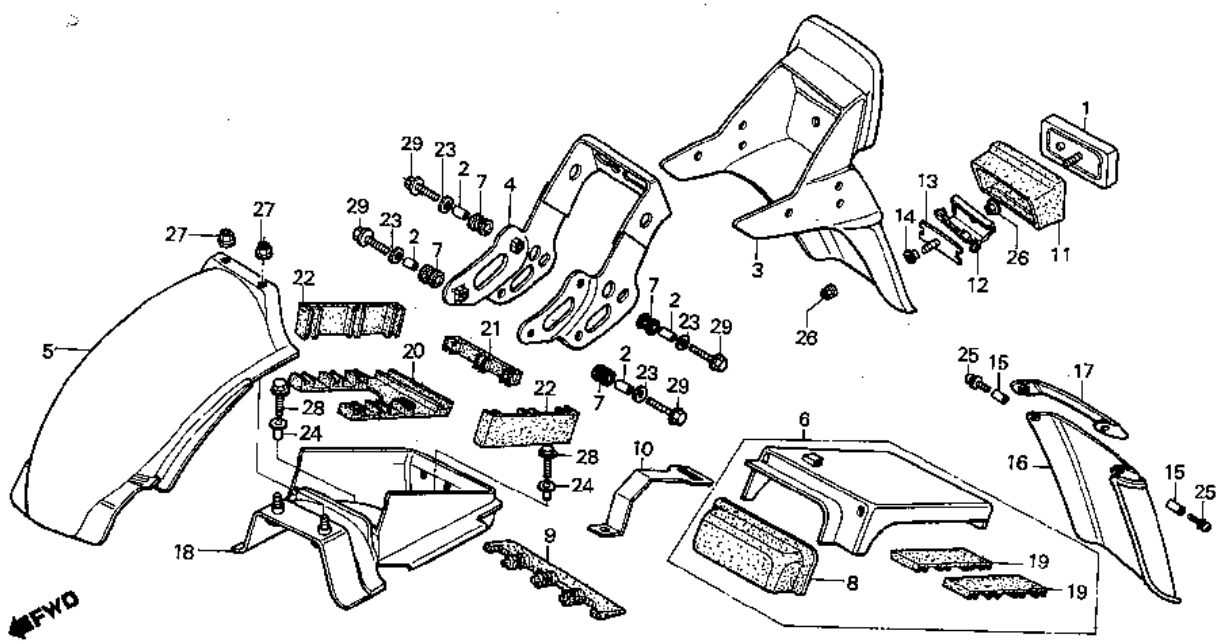

BMC7-47

Service item	F.R.T.	Ref. No.	Part No.	Description	Reqd. No. CX500TCc	Serial No.	Area code
		18	80205-MC7-000	BOX, ELECTRIC CONTROL UNIT	1		
		19	80207-MC7-000	CUSHION D, ELECTRIC CONTROL UNIT COVER	2		
		20	80208-MC7-000	CUSHION, ELECTRIC CONTROL UNIT BOX	1		
		21	80209-MC7-000	CUSHION C, ELECTRIC CONTROL UNIT BOX	1		
		22	80211-MC7-000	CUSHION B, ELECTRIC CONTROL UNIT BOX	2		
		23	90504-124-000	WASHER, CHAIN CASE SETTING	4		
		24	90522-170-700	COLLAR, GEARSHIFT LEVER SETTING	2		
		25	93891-05012-07	SCREW-WASHER, 5X12	2		ED,SW
		26	94050-05080	NUT, FLANGE, 5MM	2		
		27	94050-06080	NUT, FLANGE, 6MM	2		
		28	95700-06012-08	BOLT, FLANGE, 6X12	2		
		29	95700-06025-07	BOLT, FLANGE, 6X25	4		

I 5

F-28

Winker

Clignotant

Blinker

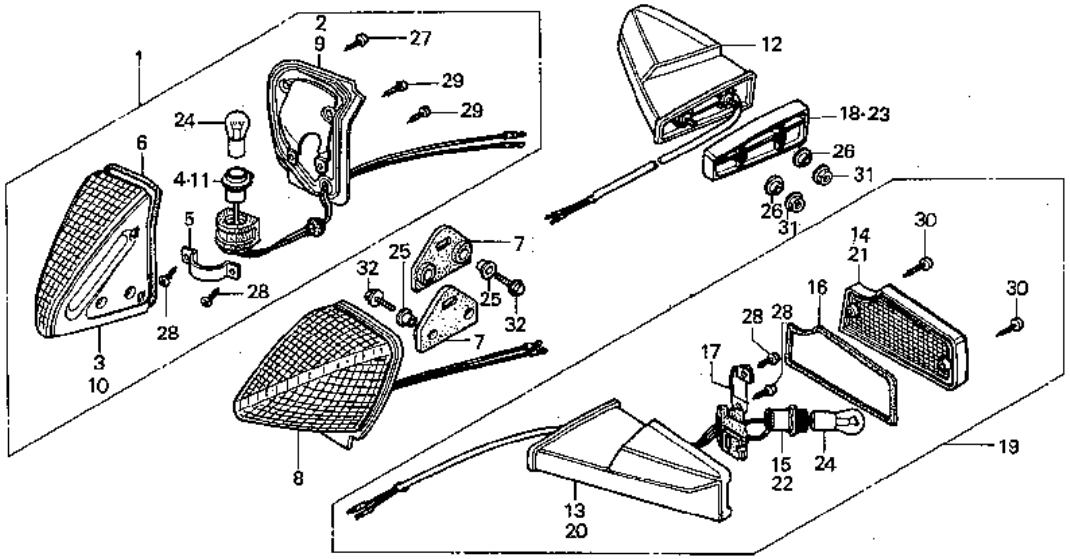

BMC7-48

Service item	F.R.T.	Ref. No.	Part No.	Description	Reqd. No. CX500TCc	Serial No.	Area code
WINKER ASSY., FR.	0.4	1	33400-MC7-612	WINKER ASSY., R. FR.	1		B,E,ED,F,G,H,IT,SW
INC. RELATIVE PART			33400-MC7-671	WINKER ASSY., R. FR.	1		CM,SA,U
(ADD 0.1 FOR EACH.)		2	33401-MC7-611	BASE COMP., R.	1		
WINKER ASSY., RR.	0.2	3	33402-MC7-611	LENS COMP., R.	1		B,E,ED,F,G,H,IT,SW
INC. RELATIVE PART			33402-MC7-671	LENS COMP., R.	1		CM,SA,U
(ADD 0.1 FOR EACH.)		4	33403-MC7-611	CORD COMP., R.	1		
BULB, WINKER	0.1	5	33404-MC7-611	HOLDER, SOCKET	1		
(WHEN SERVICING COMP., UNIT, F.R.T. IS 0.2.)		6	33405-MC7-611	PACKING, WINKER	2		
		7	33445-MC7-000	RUBBER, WINKER MOUNTING	2		
		8	33450-MC7-612	WINKER ASSY., L. FR.	1		B,E,ED,F,G,H,IT,SW
			33450-MC7-671	WINKER ASSY., L. FR.	1		CM,SA,U
		9	33451-MC7-611	BASE COMP., L.	1		
		10	33452-MC7-611	LENS COMP., L.	1		B,E,ED,F,G,H,IT,SW
			33452-MC7-671	LENS COMP., L.	1		CM,SA,U
		11	33453-MC7-611	CORD COMP., L.	1		
		12	33600-MC7-612	WINKER ASSY., R. RR.	1		B,E,ED,F,G,H,IT,SW
			33600-MC7-651	WINKER ASSY., R. RR.	1		SA,U
			33600-MC7-671	WINKER ASSY., R. RR.	1		CM
		13	33601-MC7-611	BASE COMP., R. WINKER	1		
		14	33602-MC7-612	LENS COMP., R. WINKER	1		B,E,ED,F,G,H,IT,SW
			33602-MC7-650	LENS COMP., R. WINKER	1		SA,U
			33602-MC7-671	LENS COMP., R. WINKER	1		CM
		15	33603-MC7-611	SOCKET COMP., R. WINKER	1		B,E,ED,F,G,H,IT,SA,SW,U

1981.10.20 E 15

I 6

F-28

Winker

Clignotant

Blinker

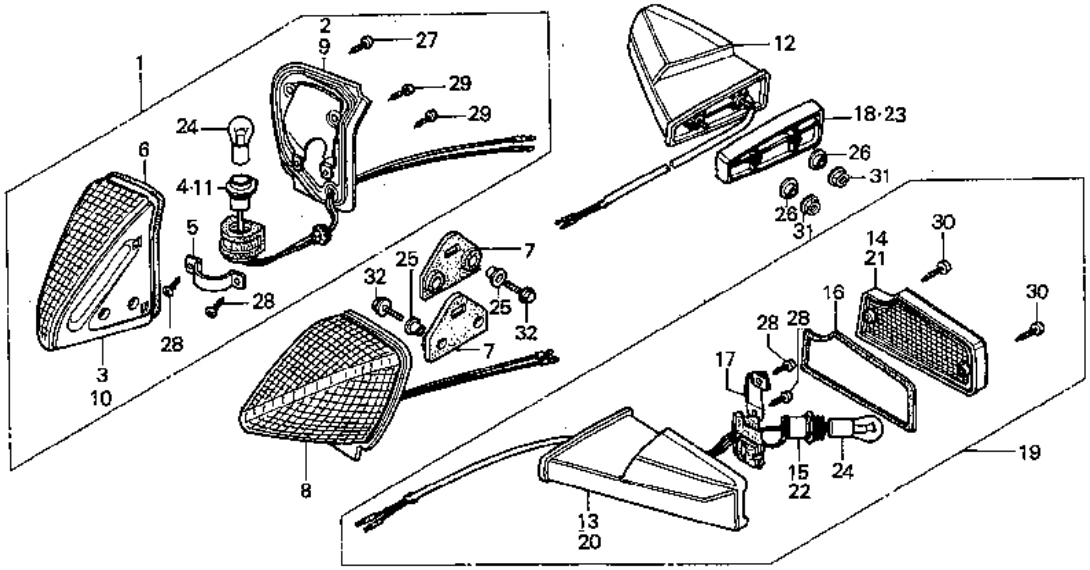

BMC7—48

Service item	F.R.T.	Ref. No.	Part No.	Description	Reqd. No. CX500TCc	Serial No.	Area code
			33603-MC7-671	SOCKET COMP., R. WINKER	1		CM
		16	33604-MC7-611	PACKING, WINKER	2		
		17	33605-MC7-611	HOLDER, SOCKET	2		
		18	33611-MC7-670	SPACER, R. RR. WINKER	1		CM
		19	33650-MC7-612	WINKER, L. RR. WINKER	1		B,E,ED,F,G,H,IT,SW
			33650-MC7-651	WINKER, L. RR. WINKER	1		SA,U
			33650-MC7-671	WINKER, L. RR. WINKER	1		CM
		20	33651-MC7-611	BASE COMP., L. WINKER	1		
		21	33652-MC7-612	LENS COMP., L. WINKER	1		B,E,ED,F,G,H,IT,SW
			33652-MC7-650	LENS COMP., L. WINKER	1		SA,U
			33652-MC7-671	LENS COMP., L. WINKER	1		CM
		22	33653-MC7-611	SOCKET COMP., L. WINKER	1		B,E,ED,F,G,H,IT,SA,SW,U
			33653-MC7-671	SOCKET COMP., L. WINKER	1		CM
		23	33661-MC7-670	SPACER, L. RR. WINKER	1		CM
		24	34905-268-671	BULB, WINKER (12V23W)	4		CM,SA,U
			34908-634-611	BULB (12V21W)	4		B,E,ED,F,G,H,IT,SW
		25	90501-MA3-720	COLLAR, 6.2X13	4		
		26	90522-170-700	COLLAR, GEARSHIFT LEVER SETTING	4		
		27	93500-04014-0G	SCREW, PAN, 4X14	2		
		28	93901-34320	SCREW, TAPPING, 4X12	8		

I 7

F-28

Winker

Clignotant

Blinker

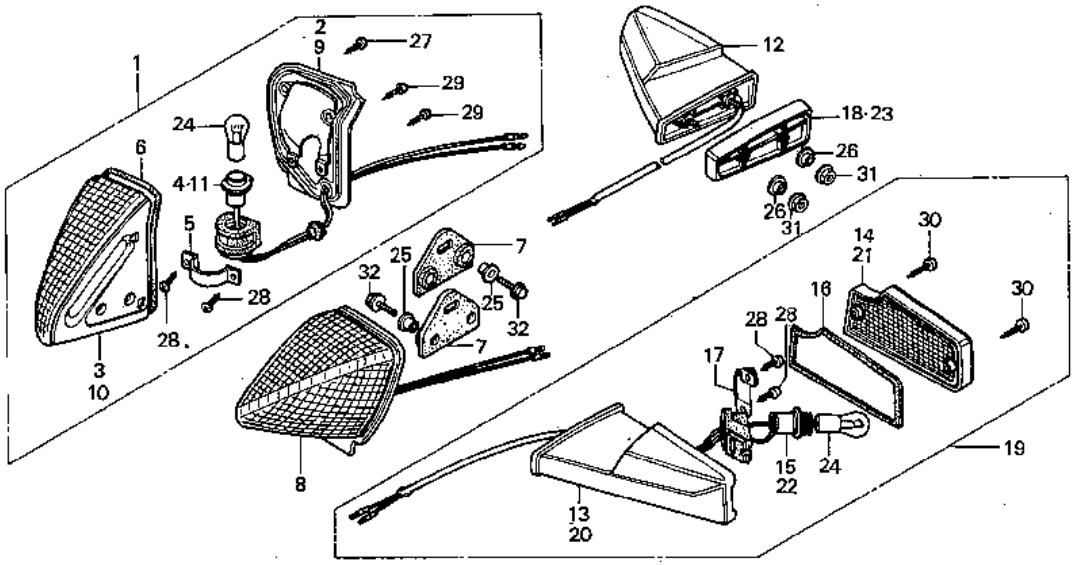

BMC7—48

Service item	F.R.T.	Ref. No.	Part No.	Description	Reqd. No. CX500TCc	Serial No.	Area code
		29	93901-34480	SCREW, TAPPING, 3X14	4		
		30	93901-34680	SCREW, TAPPING, 4X25	4		
		31	94050-06000	NUT, FLANGE, 6MM	4		
		32	95700-06020-00	BOLT, FLANGE, 6X20	4		

I 8

F-29

Taillight

Feu arrière

Rücklicht

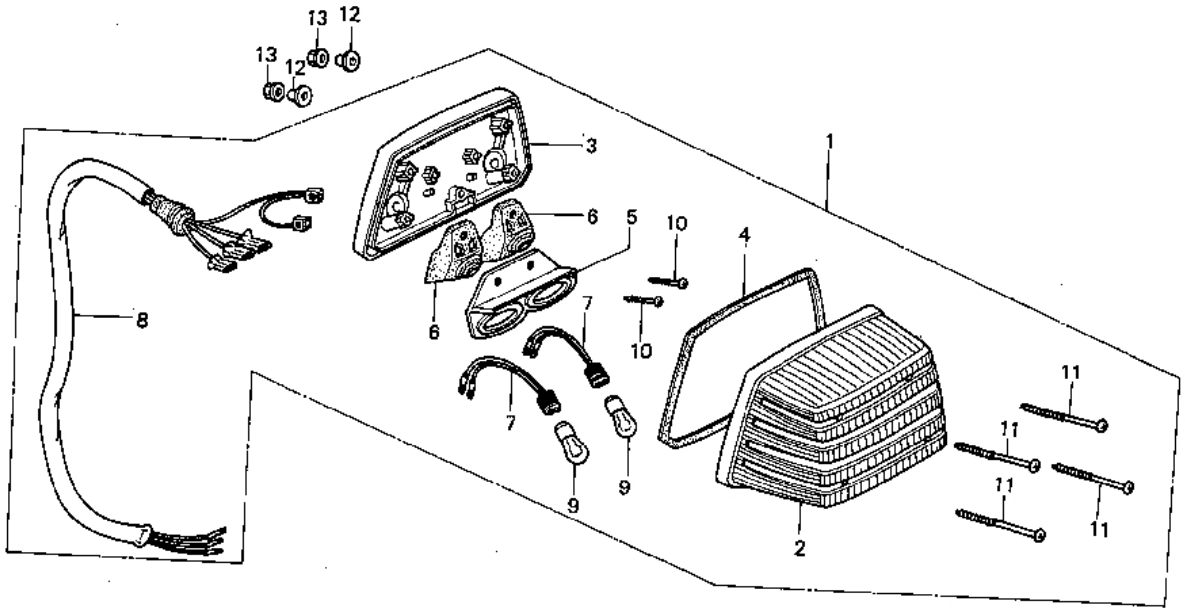

BMC7—49

Service item	F.R.T.
TAILLIGHT UNIT	0.3
.SUB CORD COMP.	
BASE COMP., TAILLIGHT	0.4
.CORD COMP.	
BULB	0.1
(ONE OR ALL)	

Ref. No.	Part No.	Description	Reqd. No. CX500TCc	Serial No.	Area code
1	33701-MC7-602	TAILLIGHT UNIT	1		B,E,ED,F,H,IT,SW
	33701-MC7-612	TAILLIGHT UNIT	1		G
	33701-MC7-651	TAILLIGHT UNIT	1		SA,U
	33701-MC7-671	TAILLIGHT UNIT	1		CM
2	33702-MC7-602	LENS, TAILLIGHT	1		B,E,ED,F,H,IT,SW
	33702-MC7-612	LENS, TAILLIGHT	1		G,SA,U
	33702-MC7-671	LENS, TAILLIGHT	1		CM
3	33703-MC7-611	BASE COMP., TAILLIGHT	1		
4	33704-MC7-611	PACKING, TAILLIGHT LENS	1		B,E,ED,F,G,H,IT,SA,SW,U
	33704-MC7-671	PACKING, TAILLIGHT LENS	1		CM
5	33705-MC7-611	REFRECTOR COMP.	1		B,E,ED,F,G,H,IT,SW
	33705-MC7-671	REFRECTOR COMP.	1		CM,SA,U
6	33706-MC7-611	SOCKET COMP.	2		
7	33707-MC7-611	CORD COMP.	2		
8	33708-MC7-611	SUB CORD COMP.	1		
9	34905-425-671	BULB, WINKER (12V23/8W STANLEY)	2		SA,U
	34906-425-771	BULB, TAILLIGHT (12V 32/3CP STANLEY)	2		CM
	34906-447-711	BULB, TAILLIGHT (12V21/5W)	2		B,E,ED,F,G,H,IT,SW
10	90104-MC7-611	SCREW, TAPPING, 4X14	2		
11	90105-KB4-003	SCREW, TAPPING, 4X40	4		
12	90522-170-700	COLLAR, GEARSHIFT LEVER SETTING	2		
13	94050-06080	NUT, FLANGE, 6MM	2		

1981.10.20 E 16

I 9

F-30

Wire harness • Ignition coil

Faisceau électrique • Bobine d'allumage

Kabelbaum • Zündspule

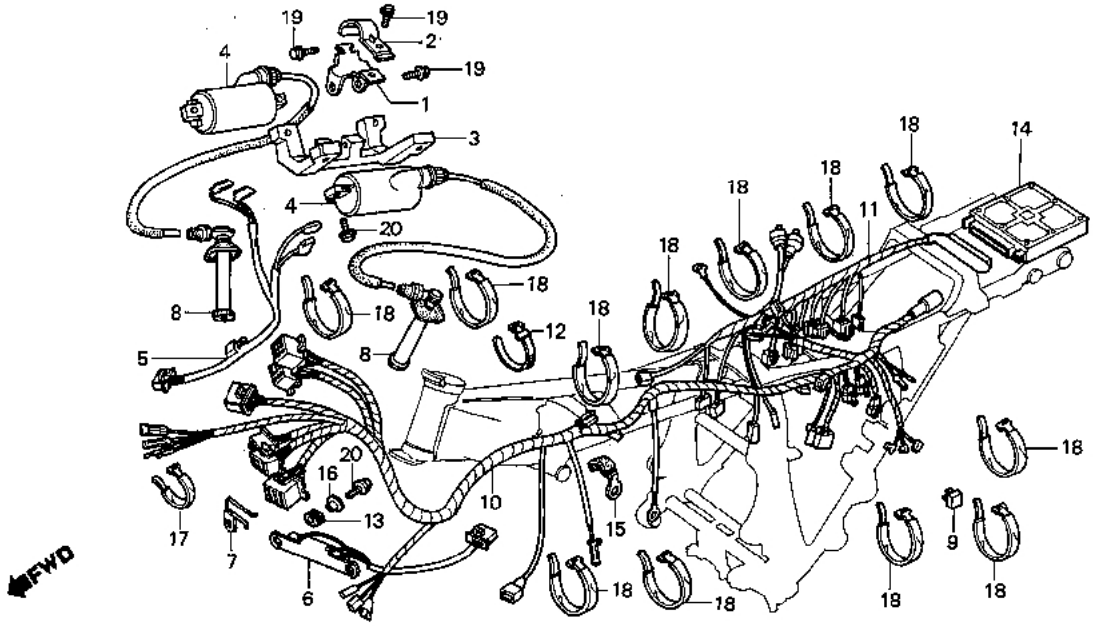

BMC7-50

Service item	F.R.T.
COIL ASSY., IGNITION	0.3
(ADD 0.1 FOR EACH.)	
SUB CORD, IGNITION COIL	0.4
RESISTOR ASSY.	0.2
•RECTIFIER ASSY., SILICON	
HARNESS, WIRE	1.9
HARNESS, SUB WIRE	0.8
UNIT ASSY., CONTROL	0.6

Ref. No.	Part No.	Description	Reqd. No. CX500TCc	Serial No.	Area code
1	30403-MC7-000	BRACKET, IGNITION COIL	1		
2	30404-MC7-000	BRACKET B, IGNITION COIL	1		
3	30405-MC7-000	STAY, IGNITION COIL	1		
4	30500-MC7-000	COIL ASSY., IGNITION	2		
5	30511-MC7-000	SUB CORD, IGNITION COIL	1		
6	30512-MC7-003	RESISTOR ASSY.	1		
7	30515-MC7-000	GUIDE, RESISTOR WIRE	1		
8	30700-MC7-000	CAP ASSY., PLUG	2		
9	31700-124-008	RECTIFIER ASSY., SILICON (SHINDENGEN)	1		
10	32100-MC7-000	HARNESS, WIRE	1		
11	32101-MC7-000	HARNESS, SUB WIRE	1		
12	32161-404-610	BAND B1, WIRE	1		
13	34931-MC7-000	RUBBER, RESISTOR MOUNTING	2		
14	38770-MC7-611	UNIT ASSY., CONTROL	1		B,E,ED,F,G,H,IT,SA,SW,U
	38770-MC7-671	UNIT ASSY., CONTROL	1		CM
15	50732-MC7-000	CLIP, THROTTLE CABLE	1		
16	61104-428-000	COLLAR, FR. FENDER	2		
17	95014-61100	BAND A1, WIRE	1		
18	95014-61200	BAND A2, WIRE	12		
19	95700-06010-00	BOLT, FLANGE, 6X10	3		
20	95700-06022-00	BOLT, FLANGE, 6X22	6		

1981.10.20 E I9

I 10

F-31

Frame body

Cadre

Rahmen

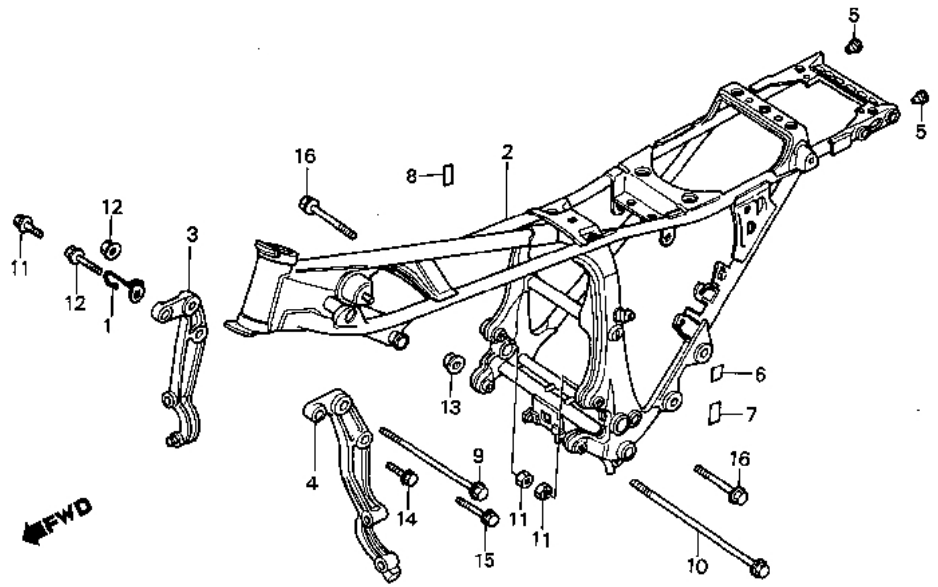

Service item	F.R.T.	Ref. No.	Part No.	Description	Reqd. No. CX500TCc	Serial No.	Area code
BODY COMP., FRAME	*9.6	1	17356-MC7-000	CLIP B, BREATHER TUBE	1		
BRACKET, FR. ENGINE HANGER	2.4	2	50100-MC7-000ZA	BODY COMP., FRAME *NH-1*	1		B,CM,E,F,H,IT,SA,SW,U
			50100-MC7-610ZA	BODY COMP., FRAME *NH-1*	1		ED,G
		3	50311-MC7-000	BRACKET, R. FR. ENGINE HANGER	1		
		4	50321-MC7-000	BRACKET, L. FR. ENGINE HANGER	1		
		5	52161-MC7-000	CAP, UPPER PIPE	2		
		6	87506-MC7-610	MARK, BATTERY CAUTION	1		B,CM,E,ED,G,H,IT,SA,SW,U
			87506-MC7-620	MARK, BATTERY CAUTION (FRENCH)	1		CM,F
		7	87508-MA1-750	LABEL, RADIATOR CAUTION (FRENCH)	1		CM,F
			87508-MA1-770	MARK, RADIATOR CAUTION	1		B,CM,E,ED,G,H,IT,SA,SW,U
		8	87518-MC7-610	LABEL, RR. CUSHION CAUTION	1		B,CM,E,ED,G,H,IT,SA,SW,U
			87518-MC7-620	LABEL, RR. CUSHION CAUTION (FRENCH)	1		CM,F
		9	90109-MC7-000	BOLT, HEX., 10X212	1		
		10	90110-415-000	BOLT, FLANGE, 12X308	1		
		11	94030-10000	NUT, HEX., 10MM	2		
		12	94050-10080	NUT, FLANGE, 10MM	1		
		13	94050-12000	NUT, FLANGE, 12MM	1		
		14	95700-10020-00	BOLT, FLANGE, 10X20	2		
		15	95800-10040-08	BOLT, FLANGE, 10X40	2		

I 11

F-31

Frame body

Cadre

Rahmen

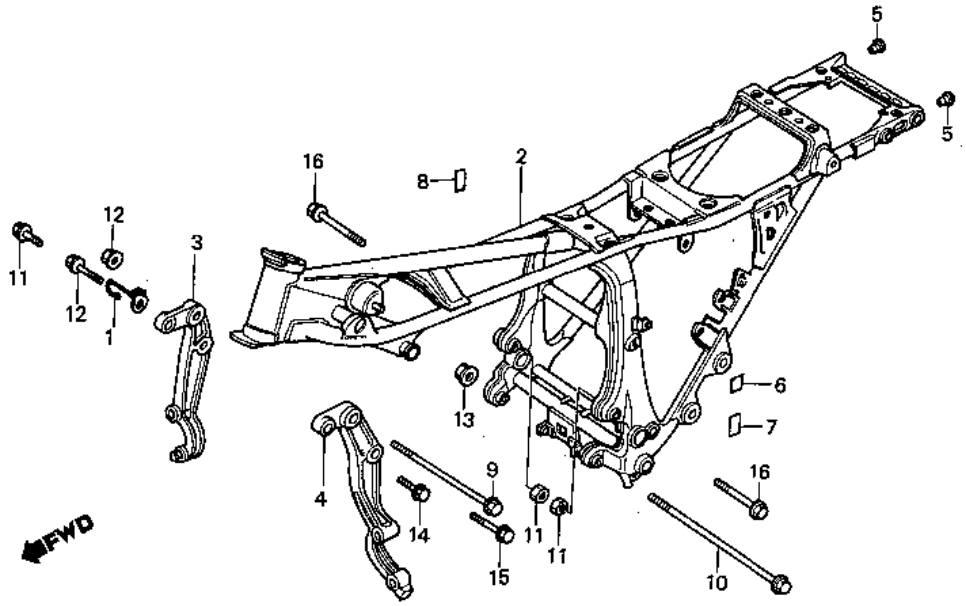

BMC7-61

Service item	F.R.T.	Ref. No.	Part No.	Description	Regd. No. CX500TCc	Serial No.	Area code
		16	95800-10070-00	BOLT, FLANGE, 10X70	2		

I 12

F-32

Reserve tank · Breather separator

Réservoir · Séparateur de respiration

Reservetank · Werkzeugkasten

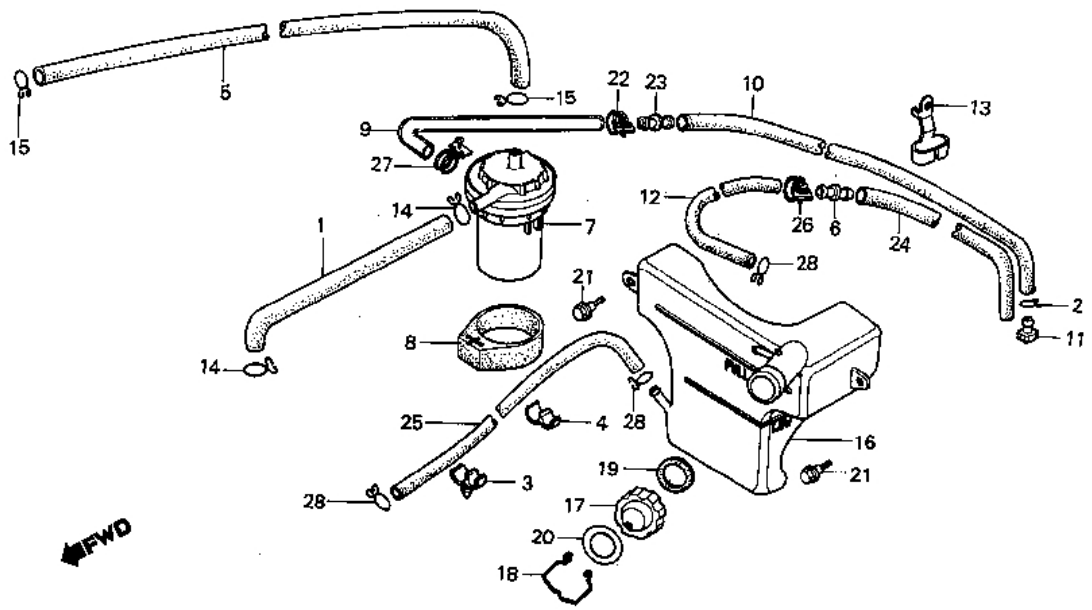

Service item	F.R.T.	Ref. No.	Part No.	Description	Reqd. No. CX500TCc	Serial No.	Area code
SEPARATOR ASSY., BREATHER	0.2	1	15761-MC7-000	TUBE B, BREATHER	1		
TANK, RESERVE	1.2	2	15772-292-010	CLIP, BREATHER TUBE	1		
TUBE, FUEL, 7.3X920	0.3	3	17355-MC7-000	CLIP C, BREATHER TUBE	1		
		4	17357-MC7-000	CLIP A, BREATHER TUBE	1		
		5	17358-MC7-000	TUBE, BREATHER	1		
		6	17359-419-670	JOINT, BREATHER TUBE	1		
		7	17365-MC7-000	SEPARATOR ASSY., BREATHER	1		
		8	17366-435-000	BAND, BREATHER SEPARATOR	1		
		9	17367-MC7-000	TUBE C, DRAIN	1		
		10	17369-MC7-000	TUBE B, DRAIN	1		
		11	17370-382-870	PLUG, BREATHER TUBE	1		
		12	17371-MC7-000	TUBE A, FUEL	1		
		13	17375-MC7-000	GUIDE, DRAIN TUBE	1		
		14	17724-102-700	CLIP, SUB TANK HOSE	2		
		15	18534-634-670	CLIP, AIR HOSE, 16	2		
		16	19103-MA1-000	TANK, RESERVE	1		
		17	19104-415-000	CAP, RESERVE TANK	1		
		18	19105-415-000	WIRE, CAP LOCK	1		
		19	19106-415-000	PACKING, RESERVE TANK	1		
		20	87507-415-620	LABEL, RESERVE TANK (FRENCH)	1		CM,F

I 13

F-32

Reserve tank • Breather separator

Réservoir • Séparateur de respiration

Reservetank • Werkzeugkasten

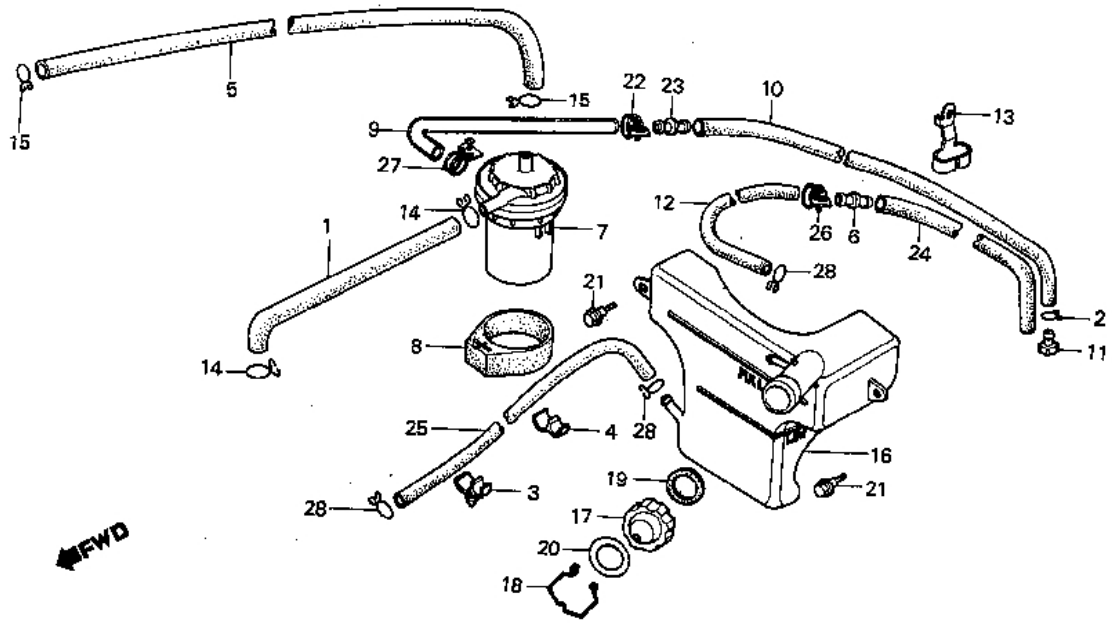

BMC7—52

Service item	F.R.T.	Ref. No.	Part No.	Description	Reqd. No. CX500TCc	Serial No.	Area code
			87507-415-670	LABEL, RESERVE TANK	1		B,CM,E,ED,G,H,IT,SA,SW,U
		21	90111-162-000	BOLT, FLANGE, 6MM	2		
		22	91462-393-780	CLIP, TUBE	1		
		23	91463-393-780	JOINT, TUBE	1		
		24	95001-75400-40	TUBE, FUEL, 7.3X400	1		
		25	95001-75920-40	TUBE, FUEL, 7.3X920	1		
		26	95002-01150	CLIP A15, TUBE	1		
		27	95002-01160	CLIP A16, TUBE	1		
		28	95002-02120	CLIP B12, TUBE	3		

I 14

F-33

Fuel pump · Tool box

Pompe à essence · Boîtier d'outils

Benzinpumpe · Werkzeugkasten

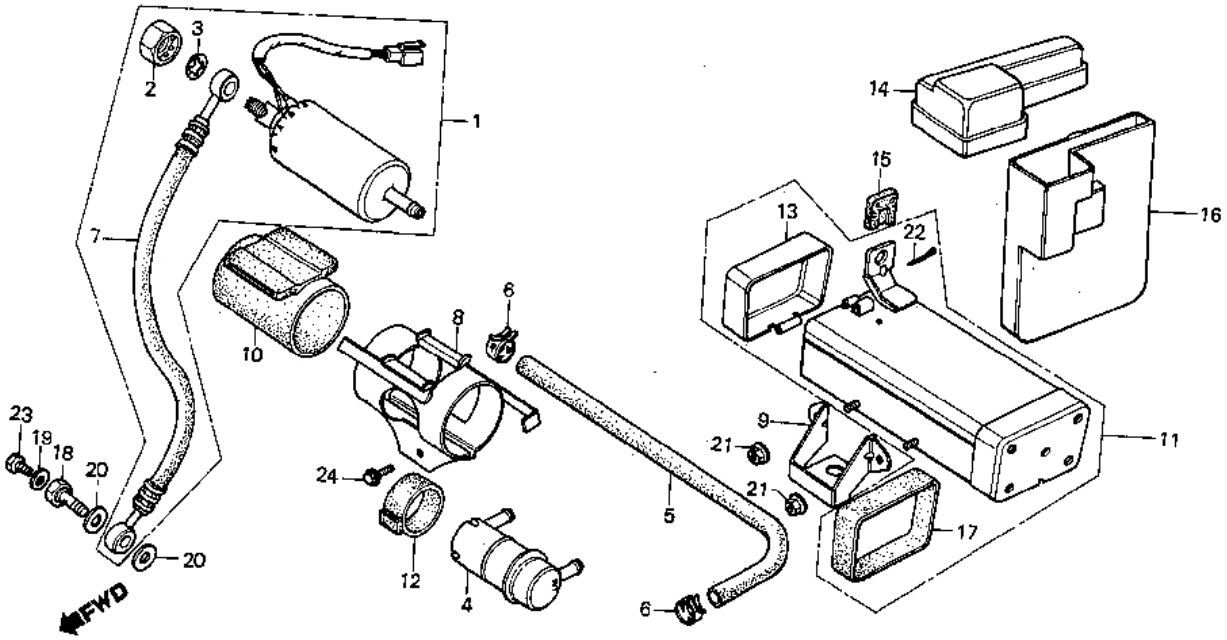

BMC7-53

Service item	F.R.T.	Ref. No.	Part No.	Description	Regd. No. CX500TCc	Serial No.	Area code
PUMP ASSY., FUEL	0.4	1	16700-MC7-003	PUMP ASSY., FUEL	1		
.FILTER ASSY., FUEL		2	16701-MC7-003	NUT, PUMP HEX.	1		
HOSE ASSY., FUEL	0.2	3	16702-MC7-003	WASHER, PUMP	1		
.CAP, TOOL BOX		4	16910-MC7-003	FILTER ASSY., FUEL	1		
BAND, FUEL PUMP	0.3	5	16966-MC7-000	HOSE, FUEL	1		
.BOX ASSY., TOOL		6	16968-MC7-000	CLIP B, FUEL HOSE	2		
		7	17965-MC7-000	HOSE ASSY., FUEL	1		
		8	50328-MC7-000	BAND, FUEL PUMP	1		
		9	50329-MC7-000	STAY, FUEL PUMP MOUNTING	1		
		10	50331-MC7-000	RUBBER, FUEL PUMP BAND	1		
		11	89501-MC7-000	BOX ASSY., TOOL	1		
		12	50333-MC7-000	RUBBER, FILTER BAND	1		
		13	89503-MC7-000	CAP, TOOL BOX	1		
		14	89506-MC7-000	CAP, OWNERS MANUAL	1		
		15	89507-MC7-000	RUBBER, OWNERS MANUAL CASE	1		
		16	89508-MC7-000	CASE, OWNERS MANUAL	1		
		17	89504-MC7-000	RUBBER, TOOL BOX BAND	1		

1981.10.20 E I14

I 15

F-33

Fuel pump · Tool box

Pompe à essence · Boîtier d'outils

Benzinpumpe · Werkzeugkasten

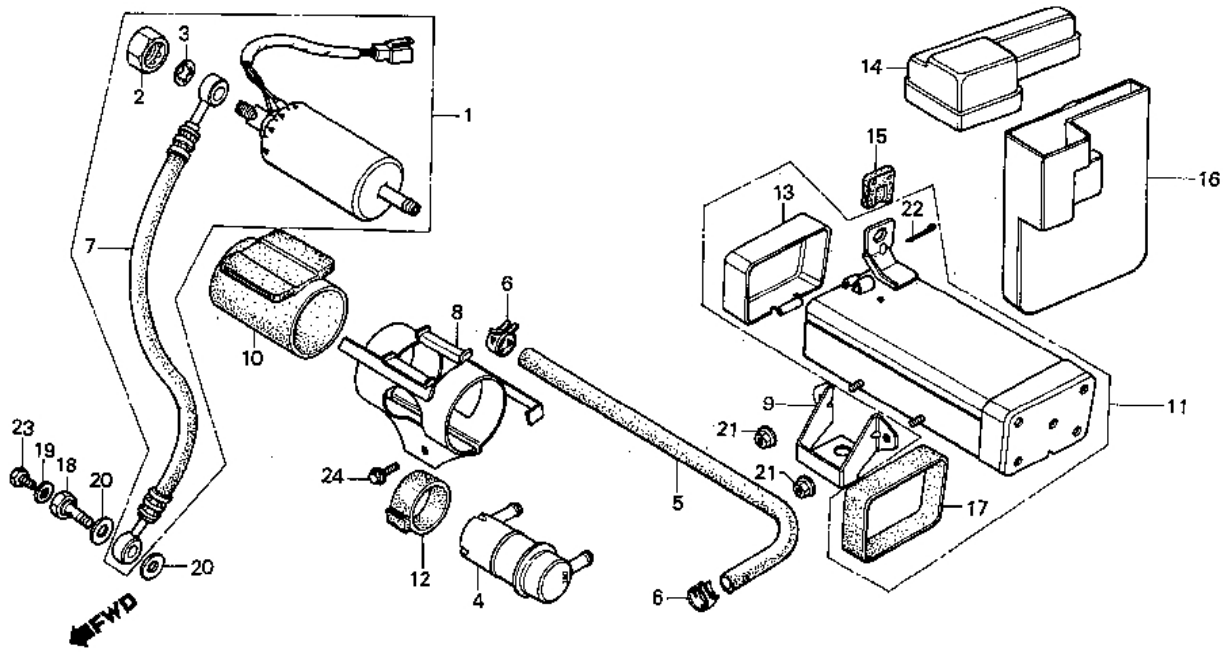

BMC7-53

Service item	F.R.T.	Ref. No.	Part No.	Description	Reqd. No. CX500TCc	Serial No.	Area code
		18	90196-MC7-000	BOLT, FUEL HOSE	1		
		19	90461-357-000	WASHER, SEALING, 12MM	1		
		20	90496-MC7-000	WASHER, FUEL BOLT	2		
		21	94050-06080	NUT, FLANGE, 6MM	2		
		22	94201-02280	PIN, SPLIT, 2.0	1		
		23	95700-06010-00	BOLT, FLANGE, 6X10	1		
		24	95700-06020-00	BOLT, FLANGE, 6X20	1		

I 16

F-34

Tool

Outils

Werkzeug

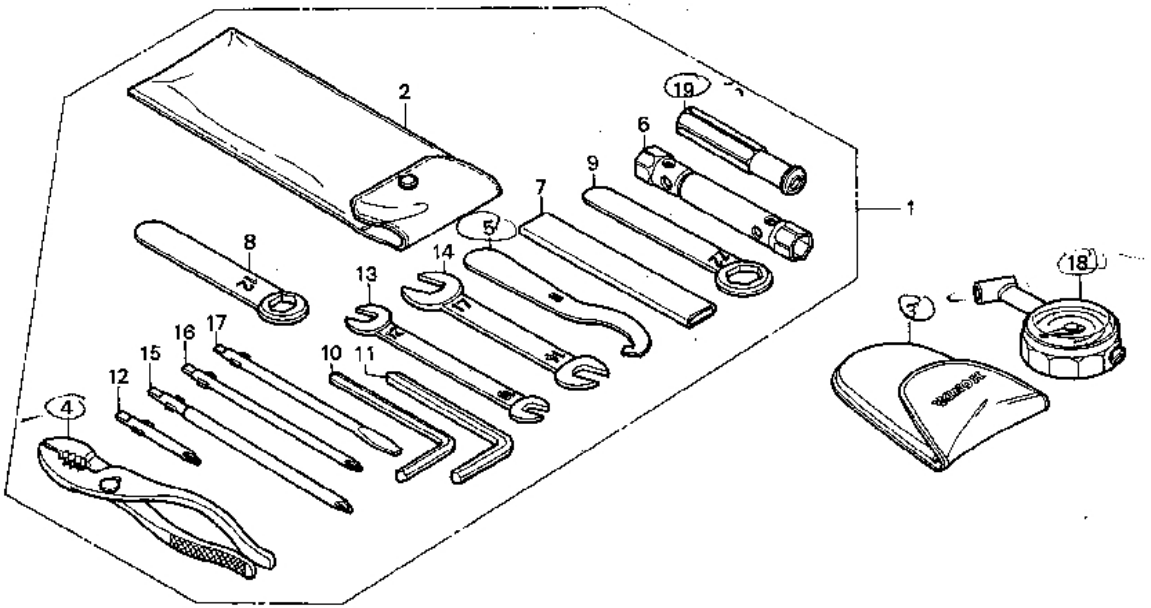

BMC7-54

Service item	F.R.T.	Ref. No.	Part No.	Description	Regd. No. CX500TCc	Serial No.	Area code
		1	89010-MC7-000	TOOL SET	1		
		2	89101-MC7-000	BAG, TOOL	1		
		3	89102-469-003	BAG, AIR PRESSURE GAUGE	1		
		4	89210-422-000	PLIERS, 150	1		
		5	89215-422-000	SPANNER, PIN	1		
		6	89216-MC7-000	WRENCH, BOX, 18.5X17	1		
		7	89217-422-000	HANDLE, EYE WRENCH, 120MM	1		
		8	89218-MC7-000	WRENCH, EYE, 12	1		
		9	89218-422-000	WRENCH, EYE, 22	1		
		10	89221-422-000	WRENCH, HEX., 6MM	1		
		11	89222-422-000	WRENCH, HEX., 8MM	1		
		12	89224-MC7-000	DRIVER 4, PLUS SCREW	1		
		13	89225-422-000	SPANNER, 10X12	1		
		14	89226-422-000	SPANNER, 14X17	1		
		15	89227-MC7-000	DRIVER 1, PLUS SCREW	1		
		16	89228-422-000	DRIVER 3, PLUS SCREW	1		
		17	89229-422-000	DRIVER 2, MINUS SCREW	1		
		18	89301-461-003	GAUGE, AIR PRESSURE	1		
		19	99003-50000	GRIP	1		

J 1

F-35

Wind screen

Pare-brise

Windscheibe

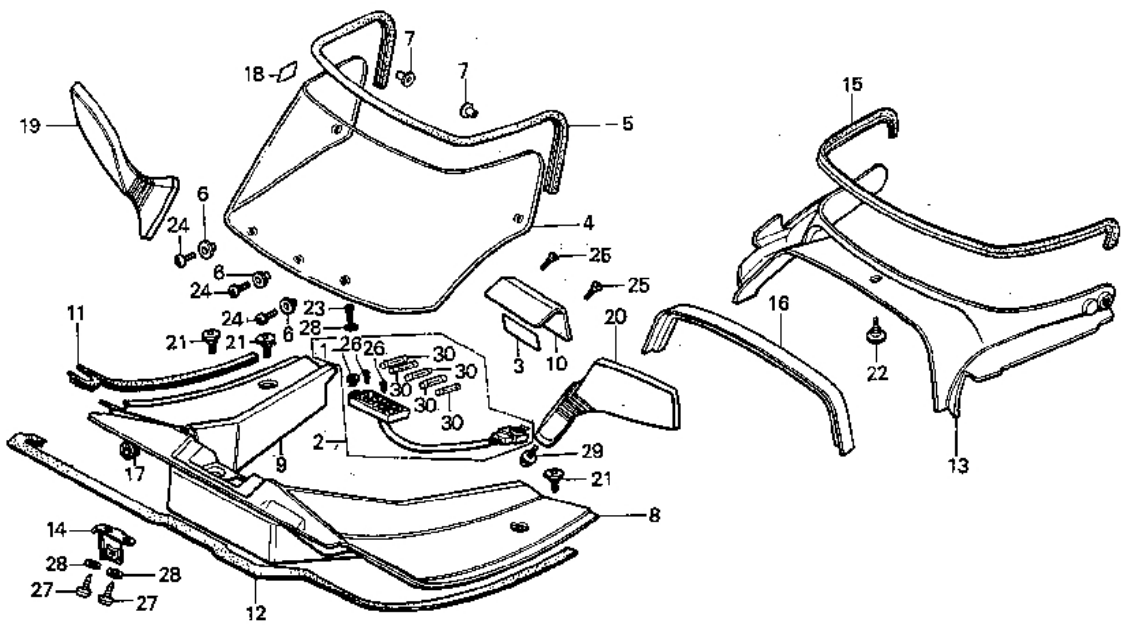

BMC7-55

Service item	F.R.T.	Ref. No.	Part No.	Description	Reqd. No. CX500TCc	Serial No.	Area code
PLATE ASSY., FUSE	0.4	1	16572-879-010	COLLAR, LEVER SETTING	1		
SCREEN, WIND	0.2	2	38200-MC7-005	PLATE ASSY., FUSE	1		
•VISOR, METER		3	38215-MC7-610	LABEL, FUSE	1		B,E,ED,G,H,IT,SA,SW,U
•PANEL A, INNER			38215-MC7-620	LABEL, FUSE (FRENCH)	1		CM,F
MIRROR ASSY., BACK	0.1	4	64100-MC7-000	SCREEN, WIND	1		
		5	64105-MC7-000	MOULDING, WIND SCREEN	1		
		6	64106-MC7-000	COLLAR, WIND SCREEN	3		
		7	64107-MC7-000	COLLAR, WIND SCREEN SIDE	2		
		8	64221-MC7-000	PANEL A, INNER	1		
		9	64222-MC7-000	PANEL B, INNER	1		
		10	64223-MC7-000	COVER, FUSE BOX	1		
		11	64224-MC7-000	RUBBER A, INNER PANEL FR. SEAL	1		
		12	64226-MC7-000	RUBBER B, INNER PANEL FR. SEAL	1		
		13	64240-MC7-000	VISOR, METER	1		
		14	64519-MC7-000	BRACKET, INNER PANEL	1		
		15	64532-MC7-000	RUBBER, METER VISOR SEAL	1		
		16	64535-MC7-000	RUBBER, METER SEAL	1		
		17	66219-634-000	GROMMET B, METER CASE	3		

1981.10.20 E J1

J 2

F-35

Wind screen

Pare-brise

Windscheibe

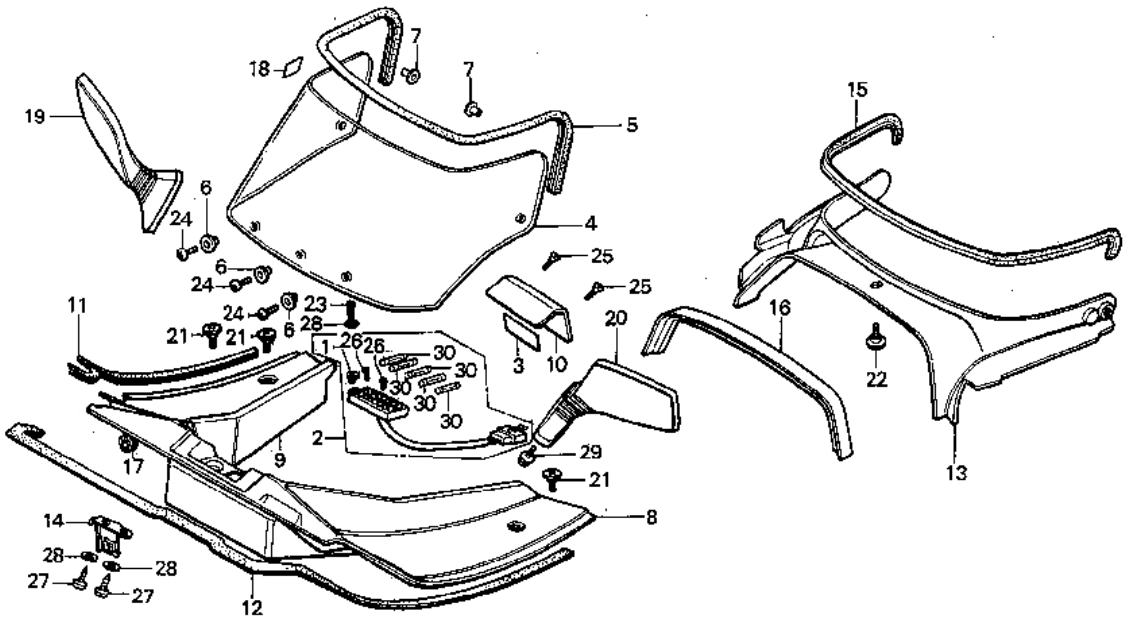

BMC7-55

Service item	F.R.T.	Ref. No.	Part No.	Description	Reqd. No. CX500TCc	Serial No.	Area code
		18	87522-MA3-700	LABEL, WINDSHIELD CAUTION	1		B,CM,E,ED,G,H,IT,SA,SW,U
			87522-MA3-720	LABEL, WINDSHIELD CAUTION	1		CM,F
		19	88110-MC7-620	MIRROR ASSY., R. BACK	1		B,E,ED,F,G,H,IT,SA,SW,U
			88110-MC7-650	MIRROR ASSY., R. BACK	1		CM
		20	88120-MC7-620	MIRROR ASSY., L. BACK	1		B,E,ED,F,G,H,IT,SA,SW,U
			88120-MC7-650	MIRROR ASSY., L. BACK	1		CM
		21	90110-MC7-000	SCREW, INNER PANEL SETTING	4		
		22	90123-MC7-000	SCREW, METER VISOR SETTING	1		
		23	93500-05016-0G	SCREW, PAN, 5X16	1		
		24	93500-06012-0A	SCREW, PAN, 6X12	3		
		25	93600-04012-0G	SCREW, FLAT, 4X12	2		
		26	93901-12120	SCREW, TAPPING, 3X8	2		
		27	93901-25280	SCREW, TAPPING, 5X12	2		
		28	94111-05700	WASHER, SPRING, 5MM	3		
		29	95700-08012-00	BOLT, FLANGE, 8X12	2		
		30	98200-21500	FUSE B (15A)	5		

J 3

F-36

Fairing

Profilage

Verkleidung

64233-MC7-000

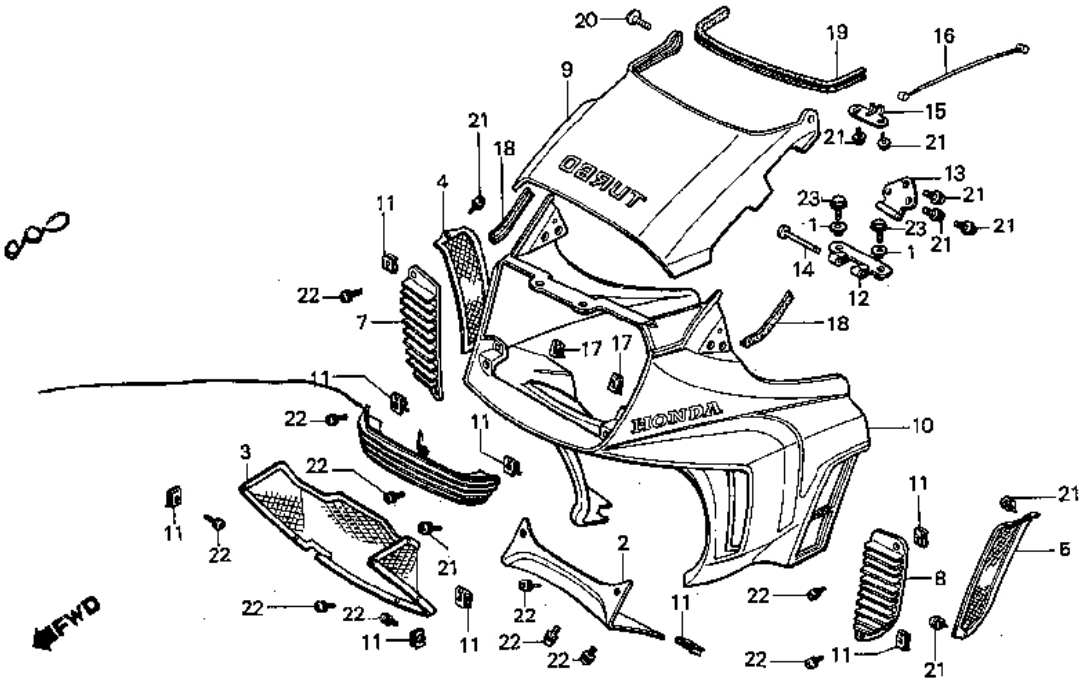

Service item	F.R.T.	Ref. No.	Part No.	Description	Reqd. No. CX500TCc	Serial No.	Area code
COVER, FAIRING LOWER	0.1	1	64107-MC7-000	COLLAR, WIND SCREEN SIDE	2		
,GRILLE, RADIATOR		2	64214-MC7-000ZA	COVER, FAIRING LOWER *NH-113P-A*	1		
,GRILLE, FAIRING FR.							
,GRILLE, FAIRING R. SIDE							
BONNET SUB ASSY., FAIRING	0.2	3	64230-MC7-000	GRILLE, RADIATOR	1		
BODY SUB ASSY., FAIRING	0.6	4	64231-MC7-000	GRILLE, R. OUTLET	1		
		5	64232-MC7-000	GRILLE, L. OUTLET	1		
		6	64233-MC7-000	GRILLE, FAIRING FR.	1		
		7	64234-MC7-000	GRILLE, FAIRING R. SIDE	1		
		8	64235-MC7-000	GRILLE, FAIRING L. SIDE	1		
		9	64270-MC7-000ZA	BONNET SUB ASSY., FAIRING *NH-113P-A*	1		B,E,ED,F,G,H,IT,SA,SW,U
			64270-MC7-670ZA	BONNET SUB ASSY., FAIRING *NH-113P-A*	1		CM
		10	64280-MC7-000ZA	BODY SUB ASSY., FAIRING *NH-113P-A*	1		
		11	64521-MC7-000	NUT, CLIP, 4MM	13		
		12	64522-MC7-000	HINGE A, BONNET	1		
		13	64523-MC7-000	HINGE B, BONNET	1		
		14	64524-MC7-000	PIN, BONNET HING	1		
		15	64527-MC7-000	STAY, BONNET STOPPER	1		
		16	64528-MC7-000	STOPPER, FAIRING BONNET	1		

J 4

F-36

Fairing

Profilage

Verkleidung

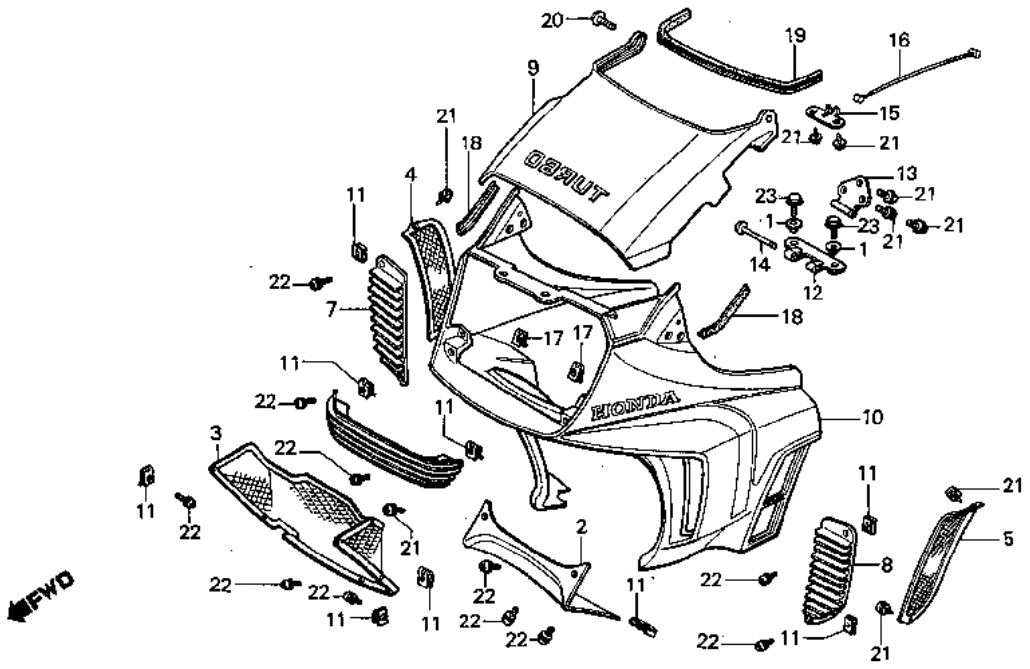

BMC7-56

Service item	F.R.T.	Ref. No.	Part No.	Description	Reqd. No. CX500TCc	Serial No.	Area code
		17	64529-MC7-000	NUT, CLIP, 6MM	2		
		18	64531-MC7-000	RUBBER, R. FAIRING SEAL	2		
		19	64533-MC7-000	RUBBER, TOP COVER SEAL	1		
		20	90111-MC7-000	SCREW, FAIRING INNER SETTING	2		
		21	93891-04010-07	SCREW-WASHER, 4X10	11		
		22	93891-04012-07	SCREW-WASHER, 4X12	13		
		23	95700-06010-00	BOLT, FLANGE, 6X10	2		

J 5

F-37

Cowl stay

Appui d'auvent

Verkleidungsstütze

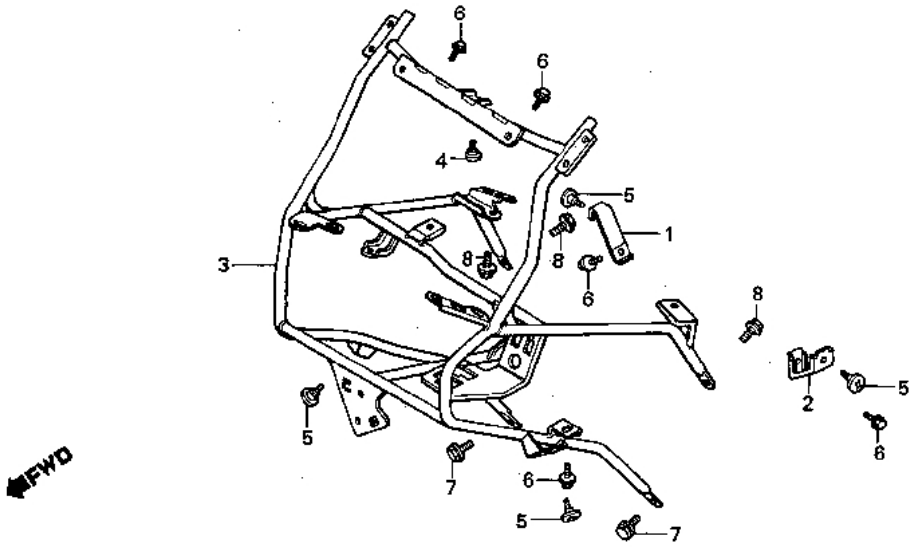

Service item	F.R.T.	Ref. No.	Part No.	Description	Reqd. No. CX500TCc	Serial No.	Area code
STAY COMP., FAIRING	0.9	1	64251-MC7-000	STAY, FAIRING R. SIDE	1		
		2	64252-MC7-000	STAY, FAIRING L. SIDE	1		
		3	64501-MC7-000	STAY COMP., FAIRING	1		
		4	80123-MC7-000	SCREW, METER VISOR SETTING	1		
		5	90112-MC7-000	SCREW, FAIRING SETTING	4		
		6	95700-06010-00	BOLT, FLANGE, 6X10	5		
		7	95700-08012-00	BOLT, FLANGE, 8X12	2		
		8	95700-08025-00	BOLT, FLANGE, 8X25	3		

J 6

F-38

Stripe

Rayure

Streifen

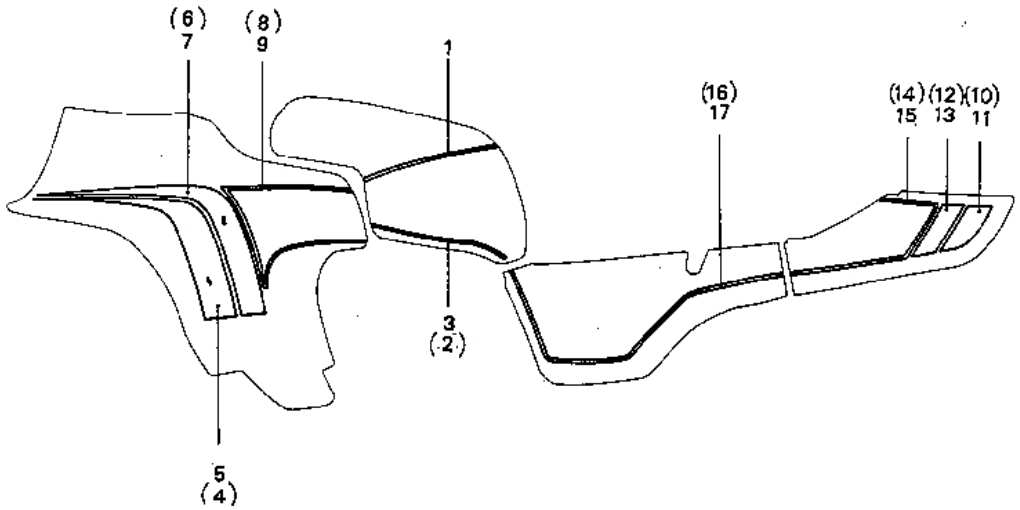

BMC7-58

Service item	F.R.T.	Ref. No.	Part No.	Description	Reqd. No. CX500TCc	Serial No.	Area code
		1	17507-MC7-300	STRIPE, FUEL TANK (A.M.)	1		
		2	17508-MC7-300	STRIPE, R. FUEL TANK SIDE (A.M.)	1		
		3	17509-MC7-300	STRIPE, L. FUEL TANK SIDE (A.M.)	1		
		4	64281-MC7-300	STRIPE A, R. FAIRING BODY (A.M.)	1		
		5	64282-MC7-300	STRIPE A, L. FAIRING BODY (A.M.)	1		
		6	64283-MC7-300	STRIPE B, R. FAIRING BODY (A.M.)	1		
		7	64284-MC7-300	STRIPE B, L. FAIRING BODY (A.M.)	1		
		8	64285-MC7-300	STRIPE C, R. FAIRING BODY (A.M.)	1		
		9	64286-MC7-300	STRIPE C, L. FAIRING BODY (A.M.)	1		
		10	83804-MC7-300	STRIPE A, R. RR. COWL (A.M.)	1		
		11	83805-MC7-300	STRIPE A, L. RR. COWL (A.M.)	1		
		12	83806-MC7-300	STRIPE B, R. RR. COWL (A.M.)	1		
		13	83807-MC7-300	STRIPE B, L. RR. COWL (A.M.)	1		
		14	83808-MC7-300	STRIPE C, R. RR. COWL (A.M.)	1		
		15	83809-MC7-300	STRIPE C, L. RR. COWL (A.M.)	1		

J 7

F-38

Stripe

Rayure

Streifen

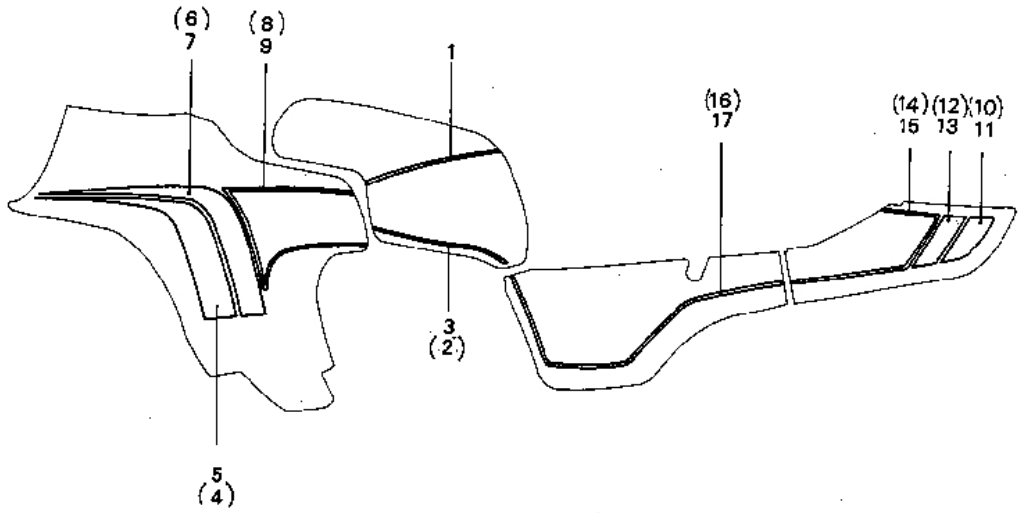

BMC7-68

Service item	F.R.T.	Ref. No.	Part No.	Description	Reqd. No. CX500TCc	Serial No.	Area code
		16	87128-MC7-300	STRIPE, R. SIDE COVER (A.M.)	1		
		17	87129-MC7-300	STRIPE, L. SIDE COVER (A.M.)	1		

J 8

F-39

Mark

Marque

Marke

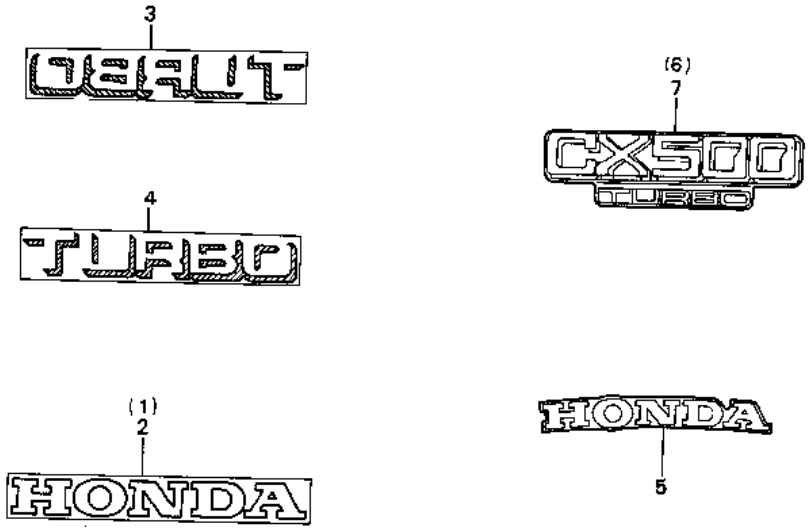

BMC7-59

Service item	F.R.T.	Ref. No.	Part No.	Description	Reqd. No. CX500TCc	Serial No.	Area code
		1	87121-MC7-300	MARK, R. FAIRING SIDE (A.M.)	1		
		2	87122-MC7-300	MARK, L. FAIRING SIDE (A.M.)	1		
		3	87124-MC7-300 ~	MARK, FAIRING BONNET (A.M.)	1		B,E,ED,F,G,H,IT,SA,SW,U
		4	87124-MC7-670	MARK, FAIRING BONNET (A.M.)	1		CM
		5	87125-MC7-300	MARK, RR. COWL (A.M.)	1		
		6	87126-MC7-300	MARK, R. SIDE COVER (A.M.)	1		
		7	87127-MC7-300	MARK, L. SIDE COVER (A.M.)	1		

Part No. / N° de pièce / Teile-Nr.	Address No. / N° de Adresse / Adresse-Nr.
11000	
11100-MC7-000	D5
11105-MC7-000	D5
11121-MC7-000	D6
11122-MC7-000	D6
11128-MC7-000	D6
11131-MC7-000	D5
11132-MC7-000	D5
11133-MC7-000	D5
11140-MC7-000	D5
11310-MC7-000	D1
11311-MC7-000	D1
11312-MC7-000	C16
11360-MC7-000	C11
11365-MC7-000	D5
11370-MC7-000	C10
11372-MC7-000	C10
11391-449-700	C11
11394-449-701	D1
11396-415-000	C15
12000	
12200-MC7-000	C3
12209-300-003	C8
12210-MC7-000	C5
12215-415-000	C2
12221-MC7-000	C9
12230-MC7-000	C9
12231-MC7-305	C3
	C5
12241-MA1-305	C3
	C5
12251-MC7-000	C3
	C5
12311-MC7-000	C2
12328-415-000	C2
12329-415-000	C2
12361-035-000	G11
12363-MC7-000	C11
	D1
12901-413-000	D5
13000	
13011-MC7-004	D7
13101-MC7-003	D7
13102-MC7-003	D7
13111-MC7-000	D7
13112-MC7-000	D7
13205-689-004	D7
13210-MC7-000	D7
13213-MC7-004	D7
13216-MC7-003	D7
13217-MC7-003	D7
13218-MC7-003	D7
13219-MC7-003	D7
13220-MC7-003	D7
13300-MC7-000	D7
13323-MC7-305	D5
13324-MC7-305	D5
13325-MC7-305	D5
14000	
14100-MC7-000	C9
14200-MC7-000	H7
14203-MC7-000	H7
14321-415-000	D3
14322-415-000	D3
14401-MA1-003	D3
14410-415-000	C8
14420-MC7-000	C8
14430-MC7-000	C8
14441-415-010	C9
14442-415-010	C9
14450-415-010	C8
14451-MC7-000	C9
14453-415-000	C9
14500-MC7-000	D3
14511-MC7-000	D3
14515-428-000	D3
14538-MC7-000	D3
14620-MC7-000	D3
14623-MC7-000	D3
14711-415-000	C8
14721-MC7-000	C8
14751-MC7-003	C8
14761-415-005	C8
14771-551-020	C8
14775-300-000	C8
14781-551-000	C8
15000	
15100-MC7-000	C13
15115-MC7-000	C13
15116-MC7-000	C13
15140-MC7-000	C13
15141-MC7-000	C13
15142-MC7-000	C11
15143-MC7-000	C13
15155-300-000	C13
15220-415-000	D5
15411-MC7-000	C13
15412-413-005	C10
15414-300-000	C10
15415-413-000	C10
15420-415-000	C10
15531-MC7-000	C10
15533-MC7-000	D12
15534-MC7-000	D12
15538-MC7-000	D12
15539-MC7-000	D12
15570-MC7-000	D12
15573-MC7-000	D12
15576-MC7-000	D12
15650-449-000	D12
15761-MC7-000	D5
15772-292-010	I12
16000	
16110-MC7-003	D15
16111-MC7-000	D15
16112-MC7-003	D15
16170-300-004	D15
16189-056-004	D15
16220-MC7-003	D15
16221-MC7-000	D15
16312-MC7-000	D15
16313-MC7-000	D15
16572-879-010	F12
16700-MC7-003	J1
16701-MC7-003	I14
16702-MC7-003	I14
16850-MC7-003	I14
16910-MC7-003	D15
16950-MC7-005	I14
16951-MC7-005	G15
16952-MC7-005	G15
16961-MC7-000	G15
16966-MC7-000	H5
16968-MC7-000	I14
16969-MC7-000	I14
16970-MC7-000	G15
16971-MC7-000	G15
16997-357-003	G15
17000	
17110-MC7-000	C11
17113-MC7-000	D15
17114-MC7-000	C3
17115-MC7-003	C5
17118-MC7-003	C3
17123-MC7-000	C5
17124-MC7-000	D15
17130-MC7-003	D15
17131-MC7-003	D15
17132-MC7-003	D15
17133-MC7-003	D15
17134-MC7-003	D15
17135-MC7-003	D15
17145-MC7-003	D15
17146-MC7-003	D16
17147-MC7-003	D16
17148-MC7-003	D16
17149-MC7-003	D16
17150-MC7-000	D16
17152-MC7-003	D16
17161-MC7-000	D16
17202-MC7-000	D16
17203-MC7-000	H7
17204-MC7-000	H7
17207-MC7-000	H7
17208-MC7-000	H7
17210-MC7-000	H7
17211-MC7-000	H7
17212-MC7-000	H7
17213-MC7-000	H7
17215-MC7-000	H7
17216-MC7-000	H7
17218-MC7-000	H7
17219-MC7-000	H7
17221-MC7-000	H7
17222-MC7-000	H7
17223-MC7-000	H7
17224-MC7-000	H7
17225-MC7-000	H7
17226-MC7-000	H7
17228-MC7-000	H8
17229-MC7-000	H8
17230-MC7-000	H8
17245-107-010	H5
17247-303-000	H2
17256-MC7-000	H8
17355-MC7-000	I12
17356-MC7-000	I10
17357-MC7-000	I12
17358-MC7-000	H8
17359-419-670	I12
17365-MC7-000	I12
17366-435-000	I12
17367-MC7-000	I12
17369-MC7-000	I12
17370-382-870	I12
17371-MC7-000	I12
17375-MC7-000	I12
175A1-MC7-000ZA	G15
17507-MC7-300	J6
17508-MC7-300	J6
17509-MC7-300	J6
17611-286-000	G15
17613-MC7-000	G15
17620-MC7-003	G15
17620-MC7-611	G15
17724-102-700	I12
17810-MC7-003	E1
17812-MC7-000	E1
17819-MC7-000	E1
17820-MC7-003	E1
17822-MC7-003	E1
17831-MC7-000	E1
17832-MC7-000	E1
17834-MC7-000	E1
17835-MC7-000	E1
17836-MC7-000	E1
17910-MC7-000	F10
17920-MC7-000	F10
17965-MC7-000	I14
18000	
18100-MC7-000	D12
18139-MC7-000	D12
18141-MC7-000	D12
18142-MC7-000	D12
18143-MC7-000	D12
18144-MC7-000	D12
18145-MC7-000	D12
18146-MC7-300	D12
18147-MC7-300	D13
18148-MC7-300	D13
18149-MC7-300	D13
18151-MC7-000	D13
18191-MC7-000	D13
18192-MC7-000	D13
18200-MC7-003	D13
18292-415-000	H9
18293-147-000	H9
18320-MC7-000	H9
18322-MC7-000	H9
18325-MC7-000	H9
18330-MC7-000	H9
18335-MC7-000	H9
18336-MC7-000	H9
18375-MC7-000	H9
18376-MC7-000	H9
18392-413-000	H9
18430-MC7-000	H9
18435-MC7-000	H9
18436-MC7-000	H9
18534-634-670	H8
19000	
19010-MC7-003	F2
19020-MC7-003	F2
19030-463-003	F2
19040-MC7-003	F2
19040-611-003	F2
19041-611-003	F2
19045-MC7-003	F2
19103-MA1-000	I12
19104-415-000	I12
19105-415-000	I12
19106-415-000	I12
19112-MC7-000	F2
19113-MC7-000	F2
19114-MC7-000	F2
19115-MC7-000	F2
19116-MC7-000	F2
19215-MC7-000	C15
19217-657-023	C15
19221-MC7-000	C15
19222-MC7-000	C15
19233-MC7-000	C15
19300-679-003	C7
19315-MC7-000	C7
19411-MC7-000	C7
19421-MC7-000	C7
19501-MC7-000	C7
19502-MC7-000	C7
19503-MC7-000	C7
19504-MC7-000	C7
19506-MC7-000	C7
19507-MC7-000	C7
19514-MC7-000	C7
19521-MC7-000	C7
19522-MC7-000	E1
22000	
22100-MC7-000	C12
22116-MC7-000	C12
22120-MC7-000	C12
22201-MC7-000	C12
22201-463-000	C12
22202-463-000	C12
22321-463-000	C12
22322-463-000	C12
22350-MC7-000	C12
22360-463-000	C12
22811-MC7-000	C10
22815-413-000	C10
22847-MC7-000	C10
22870-MC7-000	F10
22875-MC7-000	F12
23000	
23121-MC7-000	C13
23122-MC7-000	C13
23123-415-000	C13
23124-415-003	C13
23211-MC7-000	D8
23219-415-000	D8
23220-MC7-000	D8
23421-MC7-000	D8
23422-MC7-000	D8
23431-MC7-000	D8
23441-MC7-000	D8
23442-MC7-000	D8
23451-MC7-000	D8
23461-MC7-000	D8
23462-MC7-000	D8
23471-MC7-000	D8
23472-MC7-000	D8
23481-MC7-000	D8
23491-MC7-000	D8
23491-MC7-670	D8
23492-MC7-000	D8
23501-MC7-000	D8
23521-415-000	D4
23522-415-000	D9
23721-MA1-000	D4
23722-MC7-000	D4
23731-371-000	D4
23732-MA1-000	D4
23733-371-000	D4
24000	
24216-MC7-000	D10
24221-MC7-000	D10
24241-MC7-000	D10
24242-MC7-000	D10
24300-MC7-000	D10
24303-MC7-000	D10
24304-415-000	D10
24305-415-000	D10
24430-413-000	D10
24432-413-000	D10
24435-415-000	D10
24610-415-000	D10
24620-MC7-000	D10
24623-415-000	D10
24624-415-000	D10
24641-216-000	D10
24651-333-000	D10
24652-259-000	D11
24701-MC7-000	H10
24781-MC7-000	H10
28000	
28100-415-305	D2
28102-415-010	D2
28106-415-000	D2
28110-415-010	D2
28120-415-000	D2
28125-516-030	D2
28126-516-020	D2
28333-300-000	H11

Part No. / N° de pièce / Teile-Nr.	Address No. / N° de Adresse / Adresse-Nr.
30000	
30300-MC7-005	D2
30372-MC7-000	C15
30373-MC7-000	C15
30400-MC7-005	H5
30403-MC7-000	I9
30404-MC7-000	I9
30405-MC7-000	I9
30500-MC7-000	I9
30511-MC7-000	I9
30512-MC7-003	I9
30515-MC7-000	I9
30700-MC7-000	I9
30905-216-000	C9
	C13
	D7
31000	
31100-MC7-005	D2
31110-MC7-005	D2
31120-MC7-005	D2
31140-415-000	D1
31200-449-008	C16
31201-292-158	C16
31201-415-000	C16
31204-292-158	C16
31205-413-780	C16
31205-449-008	C16
31206-415-000	C16
31500-461-780	H2
31502-MA1-000	H2
31600-MC7-000	H5
31700-124-008	I9
32000	
32100-MC7-000	I9
32101-MC7-000	I9
32111-MC7-000	C11
32117-MC7-000	C11
32161-404-000	F10
32161-404-610	I9
32401-MA1-730	H2
32410-MA1-000	H2
32411-253-000	H2
32412-426-000	H2
32414-MA1-730	H2
32416-460-000	H2
32601-MC7-000	H2
33000	
33100-MC7-602	F3
33100-MC7-612	F5
33100-MC7-622	F3
33100-MC7-642	
33100-MC7-672	
33101-MC7-601	
33101-MC7-611	
33101-MC7-621	
33101-MC7-671	
33102-MC7-601	
33102-MC7-611	
33102-MC7-671	
33103-MC7-611	
33109-MC7-611	
33111-MC7-611	
33112-MC7-611	
33113-MC7-611	
33114-MC7-611	
33160-MC7-601	
33160-MC7-611	
33161-MC7-611	
33162-MC7-601	
33162-MC7-611	
33163-MC7-611	
33164-MC7-601	
33164-MC7-611	
33170-MC7-601	
33170-MC7-611	
33171-MC7-611	
33172-MC7-601	
33172-MC7-611	
33400-MC7-612	
33400-MC7-671	
33401-MC7-611	
33402-MC7-611	
33402-MC7-671	
33403-MC7-611	
33404-MC7-611	
33405-MC7-611	
33445-MC7-000	
33450-MC7-612	
33450-MC7-671	
33451-MC7-611	
33452-MC7-611	
33452-MC7-671	
33453-MC7-611	
33600-MC7-612	
33600-MC7-651	
33600-MC7-671	
33601-MC7-611	
33602-MC7-612	
33602-MC7-650	
33602-MC7-671	
33603-MC7-611	
33603-MC7-671	
33604-MC7-611	
33605-MC7-611	
33611-MC7-670	
33650-MC7-612	
33650-MC7-651	
33650-MC7-671	
33651-MC7-611	
33652-MC7-612	
33652-MC7-650	
33652-MC7-671	
33653-MC7-611	
33653-MC7-671	
33661-MC7-670	
33701-MC7-602	
33701-MC7-612	
33701-MC7-651	
33701-MC7-671	
33702-MC7-602	
33702-MC7-612	
33702-MC7-671	
33703-MC7-611	
33704-MC7-611	
33704-MC7-671	
33705-MC7-611	
33705-MC7-671	
33706-MC7-611	
33707-MC7-611	
33708-MC7-611	
33713-428-610	
33741-MC4-671	
33905-MC7-611	
34000	
34901-371-601	
34901-371-621	
34903-388-611	
34905-268-671	
34905-425-671	
34906-425-771	
34906-447-711	
34908-GA7-701	
34908-634-611	
34931-MC7-000	
35000	
35010-MC7-600	
35010-MC7-610	
35100-MC7-601	
35100-MC7-611	
35106-MC7-610	
35121-MC7-811	
35121-MC7-812	
35122-MC7-811	
35130-MC7-670	
35150-MC7-610	
35160-MC7-000	
35200-MC7-610	
35200-MC7-670	
35330-413-003	
35340-MA5-671	
35350-415-000	
35357-MA1-000	
35500-MB9-004	
35600-413-003	
35753-415-000	
35850-425-017	
35852-425-017	
35853-425-300	
35856-425-000	
36000	
36130-MC7-003	
36141-MC7-003	
36142-MC7-003	
36151-MC7-003	
36152-MC7-003	
36161-MC7-003	
36171-MC7-003	
36181-MC7-003	
36191-MC7-000	
37000	
37100-MC7-601	
37100-MC7-611	
37100-MC7-651	
37100-MC7-721	
37101-MC7-611	
37102-MC7-611	
37103-MC7-671	
37104-MC7-611	
37105-MC7-611	
37106-MC7-611	
37107-MC7-611	
37200-MC7-601	
37200-MC7-611	
37200-MC7-721	
37203-MC7-611	
37204-MC7-611	
37243-MC7-000	
37244-MC7-000	
37250-MC7-611	
37250-MC7-671	
37253-MC7-611	
37254-MC7-611	
37255-MC7-611	
37256-MC7-611	
37300-MC7-611	
37302-MC7-611	
37303-MC7-611	
37304-MC7-611	
37305-MC7-611	
37410-MC7-611	
37460-MC7-611	
37461-MC7-611	
37490-MC7-611	
37491-MC7-611	
37600-MC7-611	
37750-611-154	
37760-MC7-003	
37800-MC7-008	
38000	
38110-MC7-611	
38110-MC7-671	
38111-MC7-000	
38120-MC7-611	
38120-MC7-671	
38200-MC7-005	
38215-MC7-610	
38215-MC7-620	
38301-404-612	
38301-415-004	
38306-292-000	
38770-MC7-611	
38770-MC7-671	
40000	
40200-MC7-000	
40207-MC7-000	
40210-415-000	
41000	
41231-430-000	
41300-MC7-000	
41301-MC7-000	
41306-463-010	
41321-MC7-000	
41324-415-000	
41331-MC7-000	
41332-MC7-000	
41333-MC7-000	
41351-371-000	
414A3-MC7-000	
41450-415-000	
41451-415-000	
41452-415-000	
41453-415-000	
41454-415-000	
41455-415-000	
41456-415-000	
41457-415-000	
41458-415-000	
41459-415-000	
41460-415-000	
41461-415-000	
41462-415-000	
41463-415-000	
41464-415-000	
41465-415-000	
41466-415-000	
41467-415-000	
41468-415-000	
41469-415-000	
41470-415-000	
41510-415-000	
41511-415-000	
41512-415-000	
41513-415-000	
41514-415-000	
41515-415-000	
41516-415-000	
41517-415-000	
41518-415-000	
41519-415-000	
41520-415-000	
41521-415-000	
41522-415-000	
41523-415-000	
42000	
42610-415-000	
42620-MC7-000	
42623-MC7-000	
42650-MC7-305	
42704-MC7-000	
42705-MC7-000	
42706-MC7-000	
42710-MC7-611	
42710-MC7-612	
42710-MC7-671	
42710-MC7-672	
42753-425-003	
42753-425-004	
43000	
43100-MC7-006	
43101-MB9-006	
43105-MC7-004	
43110-MC7-006	
43121-MC7-000	
43140-MB9-000	
43310-MC7-003	
43352-568-003	
43353-461-770	
43353-461-771	
43431-MC7-000	
43432-461-000	
43434-286-000	
43500-MC7-006	
43503-422-006	
43504-371-013	
43511-443-761	
43512-MC7-611	
43513-461-771	
43514-445-771	
43520-461-771	
43530-MC7-006	
44000	
44301-MA4-670	
44311-461-770	
44620-410-000	
44650-MC7-305	
44680-410-000	
44710-MC7-611	
44710-MC7-612	
44710-MC7-671	
44710-MC7-672	
44800-MC7-003	
44830-MC7-000	
44831-MC7-300	
44832-MA3-000	
44832-MC7-000	
45000	
45100-MC7-006	
45101-MC7-006	
45105-MC7-004	
45107-MA3-006	
45108-MA3-006	
45109-166-006	
45110-MC7-006	
45111-MA3-006	
45113-MC7-610	
45114-MC7-610	
45120-MC7-000	
45124-MC7-003	
45125-MC7-003	

Part No. / N° de pièce / Teile-Nr.	Address No. / N° de Adresse / Adresse-Nr.
45125-MC7-003	F11
45126-MC7-003	F11
45127-MA1-003	F11
45128-MC7-000	G6
45131-MA3-006	G4
	G9
45133-MA3-006	G4
45133-166-016	G4
	G9
45156-MC7-000	I1
45200-MC7-006	G4
45201-MC7-006	G4
45209-166-006	G4
	G9
45210-MC7-006	G4
45215-MA3-006	G4
	G9
45217-MA3-004	G9
45217-MA3-006	G4
45220-MC7-000	G6
45500-445-631	F11
45511-MA5-671	F11
45513-MA5-671	F11
45516-166-006	F11
45517-MA5-671	F11
45520-MA5-671	F11
45520-300-000	G8
45521-300-010	G8
45530-MA5-671	F11
45535-MC7-000	G8
46000	
46500-MC7-000	H10
46504-445-771	G8
46510-MC7-000	H10
46514-MC7-000	H10
50000	
50100-MC7-000ZA	I10
50100-MC7-610ZA	I10
50197-MA1-300	H15
50311-MC7-000	I10
50321-MC7-000	I10
50324-MC7-000	H5
50326-MC7-000	H5
50327-MC7-000	H5
50328-MC7-000	I14
50329-MC7-000	I14
50330-MC7-000	H3
50331-MC7-000	I14
50332-MC7-000	H3
50333-MC7-000	I14
50340-MC7-000	H3
50500-MC7-000	H14
50503-MA1-000	H14
50510-413-610	H14
50520-413-610	H14
50523-415-610	H14
50540-MC7-000	H14
50542-438-000	H14
50548-356-700	H14
50549-356-700	H14
50601-MC7-000	H11
50612-445-840	H11
50617-445-840	H11
50618-445-840	H11
50619-MC7-000	H11
50621-438-000	H11
50628-445-840	H11
50630-MC7-000	H11
50640-MC7-000	H11
50642-445-840	H11
50644-445-840	H11
50661-425-700	H11
50700-MC7-000	H11
50701-MC7-000	H11
50705-MC7-000	H11
50710-MC7-003	H1
50710-MC7-611	H1
50711-MC7-000	H11
50712-MC7-000	H11
50714-MC7-000	H11
50715-MC7-000	H11
50716-MC7-000	H12
50716-438-000	H12
50717-MC7-000	H12
50732-MC7-000	I9
50733-MC7-000	F12
51000	
51400-MC7-003	F16
51401-MC7-003	F16
51402-MA0-770	F16
51402-MC7-003	F16
51403-MA0-770	F16
51403-MC7-003	F16
51404-MC7-003	F16
51405-MC7-003	F16
51410-MC7-003	F16
51412-461-003	F16
51413-MC7-003	F16
51414-461-003	F16
51415-461-003	F16
51416-MC7-003	F16
51417-MC7-003	F16
51418-MC7-003	F16
51419-MC7-003	F16
51421-MC7-003	F16
51423-MC7-003	F16
51425-169-003	F16
51430-MC7-003	G1
51432-MC7-003	G1
51433-MC7-003	G1
51434-MC7-003	G1
51435-MC7-003	G1
51436-MC7-003	G1
51437-MA0-770	G1
51440-MC7-003	G1
51441-MC7-003	G1
51442-MC7-003	G1
51443-MC7-003	G1
51444-MC7-003	G1
51445-MC7-003	G1
51447-461-003	G1
51450-MC7-003	G1
51456-469-013	G1
	I1
51500-MC7-003	G1
51521-MC7-003	G1
51530-MC7-003	G1
51555-461-003	G1
51634-MC7-003	G2
52000	
52110-MC7-000	H15
52111-MC7-000	H15
52112-MA1-300	H15
52114-MC7-000	H15
52115-MC7-000	H15
52116-MC7-000	H15
52117-MA1-000	H15
52117-MC7-000	H15
52161-MC7-000	I10
52400-MC7-003	I1
52406-MC7-003	I1
52425-169-003	I1
52432-MA1-003	I1
52452-MA1-731	I1
52453-MA1-731	I1
52460-MC7-000	I1
52462-MA2-000	I1
52463-MC7-003	I1
52465-MC7-300	I1
52468-MC7-300	H15
52469-MC7-000	H15
52470-MC7-000	I1
52472-MC7-003	I1
52474-MA1-003	I1
52475-MA1-000	I1
52477-MC7-003	I1
52478-MC7-003	I1
52485-MA2-003	I1
52611-MC7-003	I1
52612-MA2-003	I2
53000	
53100-MC7-000	F12
53101-MC7-000	F12
53102-MC7-000	F12
53107-121-730	F12
53137-MC7-003	G2
53139-463-000	G2
53141-300-010	F10
53165-422-000	F10
53166-422-000	F10
53172-MC7-003	F10
53175-MA5-671	F11
53178-425-003	F10
53192-268-000	F10
53200-MC7-000	F14
53203-MC7-000	F12
53204-MC7-000ZA	F12
53206-MC7-000ZA	F12
53207-MC7-000	F12
53208-MC7-000	F12
53209-MC7-000	F12
53210-MC7-000	F13
53214-371-010	F14
53220-422-000	F14
53223-371-000	F14
53230-MC7-000ZA	F13
53230-MC7-611ZA	F13
61000	
61100-MC7-000ZA	F15
61101-441-000	F13
61104-428-000	H5
	I9
61108-MC7-000	F15
61109-MC7-000	F15
64000	
64100-MC7-000	J1
64105-MC7-000	J1
64106-MC7-000	J1
64107-MC7-000	J1
	J3
64214-MC7-000ZA	J3
64221-MC7-000	J1
64222-MC7-000	J1
64223-MC7-000	J1
64224-MC7-000	J1
64225-MC7-000	G15
64226-MC7-000	J1
64227-MC7-000	G15
64229-MC7-000	G15
64230-MC7-000	J3
64231-MC7-000	J3
64232-MC7-000	J3
64233-MC7-000	J3
64234-MC7-000	J3
64235-MC7-000	J3
64240-MC7-000	J1
64251-MC7-000	J5
64252-MC7-000	J5
64270-MC7-000ZA	J3
64270-MC7-670ZA	J3
64280-MC7-000ZA	J3
64281-MC7-300	J6
64282-MC7-300	J6
64283-MC7-300	J6
64284-MC7-300	J6
64285-MC7-300	J6
64286-MC7-300	J6
64501-MC7-000	J5
64519-MC7-000	J1
64521-MC7-000	J3
64522-MC7-000	J3
64523-MC7-000	J3
64524-MC7-000	J3
64527-MC7-000	J3
64528-MC7-000	J3
64529-MC7-000	F4
	F6
64531-MC7-000	J4
64532-MC7-000	J4
64533-MC7-000	J1
64535-MC7-000	J4
64536-MC7-000	J1
	G15
66000	
66219-634-000	J1
77000	
77112-397-770	I3
77200-MC7-000	H1
77204-312-000	H1
80000	
80100-MC7-000	I3
80100-MC7-640	I3
80100-MC7-670	I3
80101-MC7-000	I3
80105-MC7-000	I3
80106-MC7-000	I3
80106-028-010	I3
80107-MC7-300	I3
80108-MC7-000	I3
80109-MC7-000	I3
80111-MC7-000	I3
80112-MC7-000	I3
80112-443-850	H5
80113-MC7-000	I3
80114-MC7-000	F15
	I3
80115-MC7-640	I3
80121-MC7-640	I3
80122-MC7-640	I3
80123-MC7-000	J5
80205-MC7-000	I4
80207-MC7-000	I4
80208-MC7-000	I4
80209-MC7-000	I4
80211-MC7-000	I4
83000	
83515-428-000	H1
83551-240-300	H1
83551-300-000	H3
83601-MC7-000	H1
83602-MC7-000	H1
83603-MC7-000	H1
83604-MC7-000	H1
83605-MC7-000	H1
83606-MC7-000	H1
83607-MC7-000	H1
83610-MC7-000ZA	H3
83618-323-000	H3
83704-MC7-000	H3
83705-MC7-000	H3
83705-MC7-610	H3
83706-MC7-000	H3
83706-MC7-610	H3
83710-MC7-000ZA	H3
83804-MC7-300	J6
83805-MC7-300	J6
83806-MC7-300	J6
83807-MC7-300	J6
83808-MC7-300	J6
83809-MC7-300	J6
83910-MC7-000ZA	H1
87000	
87106-MC7-300	F13
87121-MC7-300	J8
87122-MC7-300	J8
87124-MC7-300	J8
87124-MC7-670	J8
87125-MC7-300	J8
87126-MC7-300	J8
87127-MC7-300	J8
87128-MC7-300	J7
87129-MC7-300	J7
87505-MC7-610	H15
87505-MC7-620	H15
87505-MC7-660	H15
87505-MC7-670	H16
87505-MC7-720	H16
87506-MC7-610	I10
87506-MC7-620	I10
87507-415-620	I12
87507-415-670	I13
87508-MA1-750	I10
87508-MA1-770	I10
87509-MC7-610	G2
87509-MC7-620	G2
87517-445-630	G16
87517-445-730	G16
87518-MC7-610	I10
87518-MC7-620	I10
87522-MA3-700	J2
87522-MA3-720	J2
87560-181-760ZA	G16
87560-463-830ZA	G16
87562-MC7-600	G16
87562-MC7-620	G16
87562-MC7-670	G16
88000	
88110-MC7-620	J2
88110-MC7-650	J2
88120-MC7-620	J2
88120-MC7-650	J2
89000	
89010-MC7-000	I16
89101-MC7-000	I16
89102-469-003	I16
89210-422-000	I16
89215-422-000	I16
89216-MC7-000	I16
89217-422-000	I16
89218-MC7-000	I16
89218-422-000	I16
89221-422-000	I16
89222-422-000	I16
89224-MC7-000	I16
89225-422-000	I16
89226-422-000	I16
89227-MC7-000	I16
89228-422-000	I16
89229-422-000	I16
89301-461-003	I16
89501-MC7-000	I14
89503-MC7-000	I14
89504-MC7-000	I14
89506-MC7-000	I14
89507-MC7-000	I14
89508-MC7-000	I14
90000	
90002-MC7-000	D13
90002-415-003	D2
90008-415-000	C9
90008-422-000	C12
90010-415-000	D2
90011-415-000	D3
90012-415-000	C8

Part No. / N° de pièce / Teile-Nr.	Address No. / N° de Adresse / Adresse-Nr.
90012-415-000	C8
90013-MC7-000	C13
90015-MC7-000	D3
90016-MC7-000	C2
90017-MC7-000	C7
90021-415-000	C2
90041-679-003	F2
90042-463-003	F2
90062-MC7-000	C3
	C5
90063-MC7-003	D13
90064-MC7-003	D13
90067-MC7-000	C15
90068-MC7-000	C3
	C5
90069-MC7-000	C15
90081-MC7-000	D6
90081-415-000	D3
90089-415-000	C7
90101-MC7-611	F8
90102-MC7-003	G2
90102-MC7-611	F9
90103-438-000	G6
90104-MC7-611	I8
90105-KB4-003	I8
90105-MC7-000	F13
90105-MC7-610	F13
90108-223-000	H14
90109-MC7-000	I10
90109-371-000	G13
90110-MC7-000	J2
90110-415-000	I10
90111-MC7-000	J4
90111-162-000	I13
90111-187-000	G16
90112-MC7-000	J5
90113-MC7-000	F10
90114-MA5-671	F11
90114-428-900	F4
	F6
90116-MC7-000	H12
90116-MC7-003	G2
90116-125-782	H1
90116-283-000	G2
90116-355-000	H1
90117-MC7-000	H12
90119-671-000	H14
90120-MC7-000	H16
90121-MA1-000	H16
90121-MC7-000	H16
90121-102-000	H3
90123-MC7-000	J2
90125-MC7-000	H12
90126-415-000	G13
90127-415-000	H16
90130-MC7-000	G10
90133-371-000	G13
90134-371-000	G13
90136-MC7-000	H9
90145-300-000	F11
	G8
90145-422-010	F11
90152-MA1-000	I2
90153-MA1-000	I2
90154-MA1-000	I2
90155-369-000	F13
90166-MC7-000	H1
90180-MA3-006	G4
	G9
90185-MC7-000	G4
90186-MC7-000	I2
90189-MA2-000	I2
90196-MC7-000	I15
90201-415-000	C15
90204-426-000	C12
90205-300-000	C8
90207-415-000	D3
90217-MC7-000	D13
90217-657-000	D13
90301-MC7-003	G10
90302-425-830	F14
90304-GA6-003	I2
90304-MC7-000	F13
90305-MC0-003	G13
90305-333-000	G6
90308-357-000	H16
90309-428-731	G6
	H16
90315-504-000	F13
90321-315-670	F10
90324-300-000	G16
90355-369-000	F13
90355-469-000	H16
90401-679-003	F2
90402-679-003	F2
90403-679-003	F2
90405-415-000	C8
90406-MC7-003	D13
90407-259-000	C7
90407-415-000	C9
90432-121-000	C12
	D3
90441-706-000	C15
90446-430-000	D9
90451-708-000	D2
	D11
90452-323-000	C3
	C5
90454-MC7-000	C7
90454-415-000	D2
90454-428-000	D9
90455-MC7-000	D9
90459-357-000	D9
90461-MC7-000	D9
90461-357-000	D5
	I15
90462-MC7-000	D9
90463-MC7-000	D9
90464-MC7-000	D9
90465-MC7-000	D9
90466-MC7-000	D9
90467-MC7-000	D9
90468-MC7-000	D9
90469-MC7-000	D9
90471-MC7-000	D9
90471-580-000	G13
90473-461-000	G16
90486-028-000	C13
90496-MC7-000	D11
90501-MA3-720	I15
90501-445-840	I6
90503-283-000	H12
90504-124-000	F13
90506-MC7-000	I4
90522-170-700	F14
	I4
90534-011-000	I6
90541-371-000	I8
90543-273-000	G16
90544-283-000	F9
90545-300-000	D9
	I2
90592-MC7-000	D1
90600-MC7-611	F9
90601-300-000	F9
90662-MA1-003	F9
90701-415-000	
90890-MC7-611	
90891-MC7-611	
90892-MC7-611	
91000	
91005-634-004	D4
91005-634-008	D4
91008-374-003	D11
91010-MC7-003	D9
91015-425-832	F14
91016-371-000	F14
91021-415-005	D2
91022-415-008	D9
91051-371-003	G14
91051-371-004	G14
91051-371-005	G14
91061-463-004	G14
91061-463-008	G14
91062-415-013	G14
91066-MC7-003	H16
91066-MC7-004	H16
91101-516-000	D2
91103-429-000	D16
91105-415-000	C9
91201-706-003	C10
91202-MC7-000	D1
	D4
91202-283-013	C15
91212-422-006	G8
91252-MC7-003	G6
91254-461-004	G2
91255-461-004	G2
91256-MC7-004	D16
91256-166-003	D16
91257-MC7-003	I2
91257-230-005	G10
91258-410-013	G7
91261-463-013	G14
91262-MA0-013	I2
91262-MA0-015	I2
91262-MA1-005	I2
91262-415-003	G14
91264-415-003	G14
91265-371-003	G14
91268-463-003	H16
91301-MC7-003	D13
91301-MC7-004	D13
91301-027-000	F9
91301-250-000	D5
91301-268-020	C13
	D5
91301-469-003	G2
	I2
91302-MC7-611	G4
91302-001-000	C11
	D1
91302-001-020	G14
91302-044-013	C3
	C5
91302-377-000	C10
	C13
91302-657-000	C7
91303-MC7-003	C7
91303-001-000	D5
91304-MC7-003	D13
91305-MC7-000	G16
91305-MC7-003	G2
91306-MC7-003	G2
91307-611-000	C7
	F2
91309-MC7-003	G2
91309-300-000	C16
91310-MC7-003	G2
91311-415-000	C10
91325-567-005	C3
	C5
91353-463-005	G14
91354-463-003	G14
91355-371-003	G14
91356-371-000	G2
91356-415-003	G14
91357-415-003	G10
91359-415-300	H16
91362-MC7-004	D6
91363-MC7-004	C13
91462-393-780	I13
91463-393-780	I13
92000	
92000-05025-0A	H12
92000-05028-0A	H12
92000-06008	C13
92000-06008-0A	G2
92000-06012	G14
92500-08012-0A	H12
92700-06028-0B	D16
92700-10055-0E	G14
92700-10060-0B	D5
92712-06035-0E	G10
93000	
93500-04010-1B	G3
93500-04014-0A	E1
93500-04014-0G	I6
93500-04018-0A	H5
93500-05008-0A	C3
	C5
93500-05010-1A	G3
93500-05016-0B	F15
93500-05016-0G	J2
93500-05018-0A	D16
93500-06008-0A	F13
93500-06012-0A	F13
	J2
93500-06012-0G	H1
93500-06016-0A	F13
93600-04012-0G	J2
93600-04045-1G	F11
93600-06015-0A	H3
93700-04008-1G	H9
93700-05016-0G	G7
93700-06050-0G	F13
93891-04010-07	J4
93891-04012-07	J4
93891-05012-07	I4
93891-05030-07	F10
93891-05035-07	F10
93891-05045-07	F10
93892-05010-07	G9
93892-05012-08	D16
93893-04008	F9
93893-04012-18	F11
	G8
93893-04016-08	H8
93893-04020-08	H8
93901-12120	J2
93901-25280	J2
93901-34220	F4
	F6
93901-34320	I6
93901-34480	I7
93901-34680	I7
93901-35420	F4
	F6
93902-34110	D5
93903-24320	F9
94000	
94001-04000-0S	D1
94001-05080-0S	F2
	F15
94002-04000-0S	F9
94002-06000	C16
94002-06000-0S	F10
94002-08000-0S	G8
	H12
94030-08000	G3
94030-10000	I10
94031-10000	H14
94050-05080	I4
94050-06000	F9
	F11
	I7
94050-06000-08	G16
94050-06080	D16
	H3
	I4
	I8
	I15
94050-08080	H9
94050-10000	D5
94050-10080	H12
	I10
94050-12000	I10
94101-05000	H12
94101-05800	F4
	F6
	F15
94101-06000	H12
94101-08000	G3
	H12
94102-08000	H12
94109-14000	D6
94111-04800	D1
	F9
94111-05000	C16
	H12
94111-05700	J2
94111-06000	C16
94111-08000	G3
94201-02280	I15
94201-16150	H12
94201-20150	H16
94201-30400	H3
94301-08140	C3
	C5
	C11
	C13
	D5
94301-10160	C15
	D1
94301-14200	C2
94303-04065	D13
94305-40222	F13
	H16
94401-25180	D7
94510-10000	C10
94510-11000	C16
94608-50000	C7
	C15
	D1
95000	
95001-75400-40	I13
95001-75920-40	I13
95002-01150	I13
95002-01160	I13
95002-02070	D16
	H5
95002-02120	I13
95002-40800-08	D13
95002-41050-08	C7
	E1
95005-35085-20	D16
95005-35380-13	D16
95005-35540-14	D16
95005-35550-12	D16
95005-35940-21	H5
95012-13000	H5
95014-22200	F13
95014-61100	I9
95014-61200	I9
95014-71902	H14
95014-72102	H14
95014-72402	H14
95014-75140	C12
95015-82000	H12
95700-06010-00	D13
	G5
	G9
	H4
	H5
	H8
	H16
	I9
	I15
	J4
	J5
95700-06010-07	F14

Part No. / N° de pièce / Teile-Nr.	Address No. / N° de Adresse / Adresse-Nr.
95700-06010-07	F14
95700-06012-00	D5
	G8
	H5
95700-06012-08	I4
95700-06014-00	C11
	C13
	H4
95700-06016-00	D3
	D5
	D13
	F2
	F4
	F6
95700-06016-08	F15
95700-06020-00	D2
	D5
	I7
	I15
95700-06022-00	D13
	H5
	I9
95700-06022-08	H10
95700-06025-00	C7
	C13
	D11
95700-06025-07	F10
	F11
	I4
95700-06028-00	H10
	H14
95700-06032-00	C14
	D5
95700-06035-00	H6
95700-06040-00	D2
95700-08012-00	J2
	J5
95700-08014-08	H1
95700-08016-08	H9
95700-08018-00	D14
95700-08020-00	H12
95700-08025-00	D5
	J5
95700-08025-08	G16
95700-08032-00	H12
	H16
95700-08035-08	H9
95700-08040-00	D1
	H9
	H12
95700-08045-00	D14
95700-10020-00	I10
95700-10035-07	F14
95700-10040-00	H12
95700-10050-00	C3
	C5
95720-06025-08	C12

95725-06025-00	D11
95800-08035-00	F13
95800-08055-07	G5
95800-10040-08	I10
95800-10070-00	I11
96000	
96000-06014-00	C15
	D1
	D16
	E1
96000-06016-00	E1
96000-06018-00	C16
96000-06022-00	C3
	C5
	C9
	C15
96000-06025-00	C15
96000-06028-00	C9
	C10
	C11
96000-06032-00	D1
	D6
96000-06035-00	C10
	C16
	D16
96000-06055-00	D6
96000-06060-00	C15
96000-06080-00	C15
96100-60063-00	G14
96100-62030-00	C12
96100-63051-00	D9
96140-62040-00	D9
96140-63020-10	G7
96140-63030	G10
96201-80000	G14
96211-05000	G3
96211-08000	H13
96220-40118	D11
96220-40140	D11
98000	
98069-57912	C3
	C5
98069-57922	C3
	C5
98069-58912	C3
	C5
98069-58922	C3
	C5
98069-59912	C3
	C5
98069-59922	C4
	C6
98200-21500	J2
98200-53000	H4
99000	
99003-50000	I16
99101-116-0700	D16

HONDA

HONDA MOTOR CO., LTD. TOKYO, JAPAN

PRINTED IN JAPAN